BROAD CREEK IB ELEMENTARY SCHOOL

Multiple School Modernization
Development, Design and Construction PPEA

City of Norfolk
Norfolk Public Schools

S.B. BALLARD CONSTRUCTION COMPANY

2828 SHIPPS CORNER ROAD
VIRGINIA BEACH, VA 23453
(757) 440-5555

VOLUME 1 OF 1

SBBCC PROJECT NO. **NPS-2014-317**
VDOE NO. **118-48-00-100**

RRMM ARCHITECTS, PC
1317 Executive Boulvard, Suite 200
Chesapeake, VA 23320
(757) 622-2828

WALLER, TODD & SADLER ARCHITECTS
1909 Cypress Avenue
Virginia Beach, VA 23451
(757) 417-0140

THE LIVAS GROUP ARCHITECTS, PC
248 West Freemason Street
Norfolk, VA 23510
(757) 627-0896

VICINITY MAP

CONSULTANTS

Kimley-Horn and Associates Inc.
CIVIL ENGINEERING
501 Independence Parkway, Suite 300
Chesapeake, VA 23320
(757) 548-7300

Speight, Marshall & Francis, P.C.
STRUCTURAL ENGINEERING
2125 McComas Way, Suite 103
Virginia Beach, VA 23456
(757) 427-1020

MJT Thompson Consulting Engineers, Inc.
MEP ENGINEERING
22 Enterprise Parkway Suite 200
Hampton, VA 23666
(757) 599-4415

Food Service Consultant Studio
FOOD SERVICE CONSULTANT
16325 Hennessy Way
Montpelier, VA 23192
(804) 550-2090

WPL
LANDSCAPE DESIGN
242 Mustang Trail, Suite 8
Virginia Beach, VA 23452
(757) 431-1041

OWNER

CITY OF NORFOLK
810 Union St.
Norfolk, Virginia 23510
(757) 664-4000

NORFOLK PUBLIC SCHOOLS
800 East City Hall Avenue
Norfolk, Virginia 23510
(757) 628-3385

LOCATION MAP

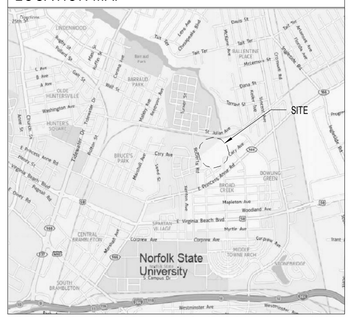

BID ALTERNATES

BID ALTERNATE NO. 1 - DELETE GIRLS GROUP TOILET B219, BOYS GROUP TOILET B211, STORAGE B221 AND CUSTODIAL B220. PROVIDE 4TH/ 5TH GRADE CLASSROOM B221. REFERENCE SHEET A-006 FOR ADDITIONAL REQUIREMENTS.

Received by SBBCC 3.2.2015

S.B. Ballard Construction Company
RRMM ARCHITECTS
WALLER TODD & SADLER ARCHITECTS
The Livas Group Architects, P.C.

MARK	DATE	BY	DESCRIPTION
REVISIONS			

DATE	03-03-2015
PROJECT	10105.22
DESIGNED	LRS
DRAWN	HJH
CHECKED	DRJ

COMMONWEALTH OF VIRGINIA
C. DUANE M. HARVER
Lic. No. 6310
03/03/15
ARCHITECT

PROJECT
CITY OF NORFOLK AND NORFOLK PUBLIC SCHOOLS
BROAD CREEK IB ELEMENTARY SCHOOL
NORFOLK, VIRGINIA

SBBCC PROJECT NUMBER: NPS-2014-317
VIRGINIA DEPARTMENT OF EDUCATION: 118-48-00-100

DRAWING
TITLE SHEET

SHEET
G-001

C:\Users\rsgossett\Documents\10105-22 Broad Creek Elem School - Central_rgossett.rvt
3/3/2015 5:22:32 PM

Sheet Number	Sheet Title
GENERAL	
G-001	TITLE SHEET
G-002	DRAWING INDEX
STRUCTURAL	
S-001	STRUCTURAL NOTES
S-002	STRUCTURAL NOTES AND ABBREVIATIONS
SD-100	DIMENSION PLAN - OVERALL
SD-101	DIMENSION PLAN - AREA 'A'
SD-102	DIMENSION PLAN - AREA 'B'
SD-103	DIMENSION PLAN - AREA 'C'
S-003	MASONRY WALL VERTICAL REINFORCING PLAN
S-101	FOUNDATION PLAN - AREA 'A'
S-102	FOUNDATION PLAN - AREA 'B'
S-103	FOUNDATION PLAN - AREA 'C'
S-121	SECOND FLOOR/LOW ROOF FRAMING PLAN - AREA 'A'
S-123	LOW ROOF FRAMING PLAN - AREA 'C'
S-131	ROOF FRAMING PLAN - AREA 'A'
S-132	ROOF FRAMING PLAN - AREA 'B'
S-133	ROOF FRAMING PLAN - AREA 'C'
S-201	CMU WALL REINFORCING ELEVATION AND DETAILS
S-311	FOUNDATION SECTIONS
S-321	FRAMING SECTIONS
S-322	FRAMING SECTIONS
S-331	FRAMING SECTIONS
S-332	FRAMING SECTIONS
S-511	TYPICAL DETAILS
S-512	TYPICAL DETAILS
S-521	TYPICAL DETAILS
S-522	TYPICAL DETAILS
S-523	TYPICAL DETAILS
S-524	TYPICAL DETAILS
S-525	TYPICAL DETAILS
S-701	FIREWALL PORTAL ELEVATIONS AND DETAILS
LIFE SAFETY	
LS-101	LIFE SAFETY PLAN - FIRST FLOOR
LS-102	LIFE SAFETY PLAN - SECOND FLOOR
LS-103	LIFE SAFETY OCCUPANT LOAD TABLE
ARCHITECTURAL	
A-001	DATA SHEET
A-002	PARTITION TYPES
A-003	OVERALL FIRST FLOOR PLAN
A-004	OVERALL SECOND FLOOR PLAN
A-005	SITE DETAILS
A-006	BID ALTERNATE
A-101	FIRST FLOOR PLAN - AREA 'A1'
A-102	FIRST FLOOR PLAN - AREA 'B1'
A-103	FIRST FLOOR PLAN - AREA 'C1'
A-104	FIRST FLOOR REFLECTED CEILING PLAN - AREA 'A1'
A-105	FIRST FLOOR REFLECTED CEILING PLAN - AREA 'B1'
A-106	FIRST FLOOR REFLECTED CEILING PLAN - AREA 'C1'
A-121	SECOND FLOOR PLAN - AREA 'A2'
A-122	SECOND FLOOR PLAN - AREA 'B2'
A-123	SECOND FLOOR PLAN - AREA 'C2'
A-124	SECOND FLOOR REFLECTED CEILING PLAN - AREA 'A2'
A-125	SECOND FLOOR REFLECTED CEILING PLAN - AREA 'B2'
A-140	ROOF PLAN
A-200	EXTERIOR OVERALL ELEVATIONS
A-201	EXTERIOR ELEVATIONS
A-202	EXTERIOR ELEVATIONS
A-203	EXTERIOR COURTYARD ELEVATIONS
A-301	BUILDING SECTIONS
A-302	BUILDING SECTIONS
A-303	WALL SECTIONS
A-304	WALL SECTIONS
A-305	WALL SECTIONS
A-306	WALL SECTIONS
A-307	WALL SECTIONS
A-308	WALL SECTIONS
A-309	WALL SECTIONS
A-310	WALL SECTIONS
A-402	ENLARGED PLAN - ADMINISTRATION AND CLINIC
A-403	ENLARGED PLAN - DISCOVERY CENTER
A-404	ENLARGED PLANS
A-405	ENLARGED PLAN - GYMNASIUM AND STAGE
A-406	ENLARGED TOILET PLANS
A-407	ENLARGED STAIR AND ELEVATOR PLANS
A-408	STAIR SECTIONS
A-409	STAIR AND RAILING DETAILS
A-410	STAIR AND RAILING DETAILS
A-411	ELEVATOR DETAILS
A-412	RAMP DETAILS
A-501	PLAN DETAILS
A-502	PLAN DETAILS
A-503	ENLARGED FIRE PORTAL PLANS AND SECTIONS
A-504	ROOF DETAILS
A-505	ROOF DETAILS
A-506	ROOF DETAILS
A-507	SECTION DETAILS
A-508	MISCELLANEOUS DETAILS
A-509	DETAILS
A-601	DOOR SCHEDULE AND NOTES
A-604	FRAME & DOOR ELEVATIONS & DETAILS
A-605	FRAME ELEVATIONS
A-606	FRAME DETAILS
A-607	DOOR & FRAME DETAILS
A-608	FRAME DETAILS
A-609	FRAME DETAILS
A-701	FINISH SCHEDULE AND NOTES
A-702	FINISH LEGEND AND INTERIOR ELEVATIONS
A-703	INTERIOR ELEVATIONS
A-801	CASEWORK ELEVATIONS
A-802	CASEWORK ELEVATIONS & DETAILS
A-803	DISPLAY CASE ELEVATIONS AND DETAILS
A-901	FLOOR PATTERN PLAN - FIRST FLOOR AREA 'A1'
A-902	FLOOR PATTERN PLAN - FIRST FLOOR AREA 'B1'
A-903	FLOOR PATTERN PLAN - FIRST FLOOR AREA 'C1'
A-921	FLOOR PATTERN PLAN - SECOND FLOOR AREA 'A2'
A-922	FLOOR PATTERN PLAN - SECOND FLOOR AREA 'B2'

Sheet Number	Sheet Title
FOOD SERVICE	
QF-101	FOODSERVICE EQUIPMENT LAYOUT
QF-102	FOODSERVICE EQUIPMENT ROOF PLAN
QF-201	FOODSERVICE PLUMBING & VENTILATION ROUGH-INS
QF-202	FOODSERVICE ELECTRICAL ROUGH-INS
QF-203	FOODSERVICE ROOF ROUGH-INS
QF-301	FOODSERVICE EXHAUST HOOD DETAILS
QF-302	FOODSERVICE EXHAUST HOOD DETAILS
QF-303	FOODSERVICE FAN DETAILS
QF-304	FOODSERVICE ELEVATIONS & SERVING LINE DETAILS
SPRINKLER	
SP-001	LEGEND, NOTES, & ABBREVIATIONS - SPRINKLER
SP-101	FIRST FLOOR PLAN - AREA 'A' - SPRINKLER
SP-102	FIRST FLOOR PLAN - AREA 'B' - SPRINKLER
SP-103	FIRST FLOOR PLAN - AREA 'C' - SPRINKLER
SP-121	SECOND FLOOR PLAN - AREA 'A' - SPRINKLER
SP-122	SECOND FLOOR PLAN - AREA 'B' - SPRINKLER
SP-501	FIRESTOP DETAILS
PLUMBING	
P-001	LEGEND, NOTES, & ABBRIVIATIONS - PLUMBING
P-002	SCHEDULES - PLUMBING
P-003	BID ALTERNATE
P-101.A	FIRST FLOOR PLAN - AREA 'A' - PLUMBING - DWV
P-102.A	FIRST FLOOR PLAN - AREA 'B' - PLUMBING - DWV
P-103.A	FIRST FLOOR PLAN - AREA 'C' - PLUMBING - DWV
P-121.A	SECOND FLOOR PLAN - AREA 'A' - PLUMBING - DWV
P-122.A	SECOND FLOOR PLAN - AREA 'B' - PLUMBING - DWV
P-123.A	SECOND FLOOR PLAN - AREA 'C' - PLUMBING - DWV
P-101.B	FIRST FLOOR PLAN - AREA 'A' - PLUMBING - DOMESTIC WATER
P-102.B	FIRST FLOOR PLAN - AREA 'B' - PLUMBING - DOMESTIC WATER
P-103.B	FIRST FLOOR PLAN - AREA 'C' - PLUMBING - DOMESTIC WATER
P-121.B	SECOND FLOOR PLAN - AREA 'A' - PLUMBING - DOMESTIC WATER
P-122.B	SECOND FLOOR PLAN - AREA 'B' - PLUMBING - DOMESTIC WATER
P-130	ROOF PLAN - OVERALL - PLUMBING
P-401	ENLARGED KITCHEN PLAN - PLUMBING - DWV
P-402	ENLARGED KITCHEN PLAN - PLUMBING DOMESTIC WATER
P-403	ENLARGED PLANS - PLUMBING - DOMESTIC WATER
P-501	DETAILS - PLUMBING
P-502	FIRESTOP DETAILS - PLUMBING
P-503	PLUMBING ISOMETRICS AND DIAGRAMS
MECHANICAL	
M-001	MECHANICAL LEGEND, NOTES AND ABBREVIATIONS
M-002	MECHANICAL SCHEDULES
M-003	MECHANICAL SCHEDULES
M-004	MECHANICAL SCHEDULES
M-005	BID ALTERNATE
M-101.A	FIRST FLOOR PLAN - AREA 'A1' - MECHANICAL - DUCTWORK
M-102.A	FIRST FLOOR PLAN - AREA 'B1' - MECHANICAL - DUCTWORK
M-103.A	FIRST FLOOR PLAN - AREA 'C1' - MECHANICAL - DUCTWORK
M-121.A	SECOND FLOOR PLAN - AREA 'A2' - MECHANICAL - DUCTWORK
M-122.A	SECOND FLOOR PLAN - AREA 'B2' - MECHANICAL - DUCTWORK
M-131	ROOF PLAN - AREA 'A' - MECHANICAL
M-132	ROOF PLAN - AREA 'B' - MECHANICAL
M-133	ROOF PLAN - AREA 'C' - MECHANICAL
M-401	MECHANICAL SECTIONS
M-501	MECHANICAL DETAILS
M-502	MECHANICAL DETAILS
M-503	FIRESTOP DETAILS
ELECTRICAL	
E-001	ELECTRICAL LEGEND, ABBREVIATIONS AND NOTES
E-002	ELECTRICAL DETAILS
E-003	BID ALTERNATE - ELECTRICAL
E-101.A	FIRST FLOOR - AREA 'A1' - LIGHTING
E-102.A	FIRST FLOOR - AREA 'B1' - LIGHTING
E-103.A	FIRST FLOOR - AREA 'C1' - LIGHTING
E-121.A	SECOND FLOOR - AREA 'A2' - LIGHTING
E-122.A	SECOND FLOOR - AREA 'B2' - LIGHTING
E-101.B	FIRST FLOOR - AREA 'A1' - POWER
E-102.B	FIRST FLOOR - AREA 'B1' - POWER
E-103.B	FIRST FLOOR - AREA 'C1' - POWER
E-121.B	SECOND FLOOR - AREA 'A2' - POWER
E-122.B	SECOND FLOOR - AREA 'B2' - POWER
E-101.C	FIRST FLOOR - AREA 'A1' - HVAC POWER
E-102.C	FIRST FLOOR - AREA 'B1' - HVAC POWER
E-103.C	FIRST FLOOR - AREA 'C1' - HVAC POWER
E-121.C	SECOND FLOOR - AREA 'A2' - HVAC POWER
E-122.C	SECOND FLOOR - AREA 'B2' - HVAC POWER
E-101.D	FIRST FLOOR - AREA 'A1' - AUXILIARY SYSTEMS
E-102.D	FIRST FLOOR - AREA 'B1' - AUXILIARY SYSTEMS
E-103.D	FIRST FLOOR - AREA 'C1' - AUXILIARY SYSTEMS
E-121.D	SECOND FLOOR - AREA 'A2' - AUXILIARY SYSTEMS
E-122.D	SECOND FLOOR - AREA 'B2' - AUXILIARY SYSTEMS
E-131	ROOF PLAN - AREA 'A' - HVAC POWER
E-132	ROOF PLAN - AREA 'C' - HVAC POWER
E-401	ENLARGED PLAN - FOOD SERVICE AREA
E-501	POWER RISER DIAGRAM AND NOTES
E-502	DETAILS AND PANELBOARD SCHEDULES
E-503	ELECTRICAL PANEL SCHEDULES
E-504	ELECTRICAL PANEL SCHEDULES
E-505	ELECTRICAL PANEL SCHEDULES
E-601	ELECTRICAL SITE PLAN

S.B. Ballard Construction Company

RRMM ARCHITECTS

WALLER TODD & SADLER ARCHITECTS

The Livas Group Architects, P.C.

MARK	DATE	BY	DESCRIPTION

REVISIONS

DATE 03-03-2015
PROJECT 10105.22
DESIGNED LRS
DRAWN HJH
CHECKED DRJ

COMMONWEALTH OF VIRGINIA
C. DUANE M. HARVER
Lic. No. 6310
03/03/15
ARCHITECT

PROJECT
CITY OF NORFOLK AND NORFOLK PUBLIC SCHOOLS
BROAD CREEK IB ELEMENTARY SCHOOL
NORFOLK, VIRGINIA

SBBCC PROJECT NUMBER NPS-2014-317
VIRGINIA DEPARTMENT OF EDUCATION 118-48-00-100

DRAWING
DRAWING INDEX

SHEET
G-002

Received by SBBCC 3.2.2015

C:\Users\rgossett\Documents\10105-22 Broad Creek Elem School - Central_rgossett.rvt

3/3/2015 5:22:44 PM

BUILDING CODE DESIGN SUPPORTING DATA

PROJECT BASIC DESCRIPTION
THE PROJECT INCLUDES CONSTRUCTION OF A NEW 101,060 SF ELEMENTARY SCHOOL. THE NEW SCHOOL WILL CONSIST OF A TWO (2)-STORY CLASSROOM WING AND A ONE (1) STORY PUBLIC AREA. THE QUANTITY OF PUBLIC WATER AVAILABLE AT THE SITE WILL SUPPORT FIRE FIGHTING FLOWS. DOMESTIC WATER WILL BE DIRECT FROM THE PUBLIC SYSTEM. DESIGN OCCUPANT LOAD IS FOR 2,310 OCCUPANTS BASE BID AND MAXIMUM 2,338 OCCUPANTS INCLUDING THE BID ALTERNATE.

A. APPLICABLE CODES
1. 2009 VIRGINIA UNIFORM STATEWIDE BUILDING CODE, PART 1, CONSTRUCTION (VIRGINIA CONSTRUCTION CODE) INCLUDING BY REFERENCE:
   - 2009 VIRGINIA CONSTRUCTION CODE
   - 2009 VIRGINIA MECHANICAL CODE
   - 2009 VIRGINIA PLUMBING CODE
   - 2008 NFPA 70 NATIONAL ELECTRIC CODE
   - 2009 VIRGINIA ENERGY CONSERVATION CODE
   - 2009 VIRGINIA STATEWIDE FIRE PREVENTION CODE
2. ACCESSIBILITY CODE:
   - ICC/ANSI A117.1 ACCESSIBLE AND USABLE BUILDINGS AND FACILITIES - 2003
   - 2010 ADA STANDARD FOR ACCESSIBLE DESIGN 9.15.2010
3. ZONING ORDINANCE FOR CITY OF NORFOLK, VIRGINIA
4. OTHER STANDARDS:
   - VIRGINIA DEPT. OF HEALTH FOR COMMERCIAL KITCHEN AND RESTAURANTS
   - 2010 ADA STANDARDS FOR ACCESSIBLE DESIGN
   - 2010 GUIDELINES FOR SCHOOL FACILITIES IN VIRGINIA'S PUBLIC SCHOOLS

B. GROSS BUILDING AREAS
1. FIRST FLOOR BUILDING AREA: 67,460 SF
2. SECOND FLOOR BUILDING AREA: 33,600 SF

TOTAL BUILDING AREA: 101,060 SF

C. BUILDING OCCUPANCY AND CONSTRUCTION TYPE
1. PER VCC 302.1, BUILDING USE CLASSIFICATION: OCCUPANCY GROUP E "EDUCATIONAL."
2. PER VCC 303.1.4, ASSEMBLY AREAS THAT ARE ACCESSORY TO GROUP E ARE NOT CONSIDERED SEPARATE OCCUPANCIES.
3. PER VCC 602.1, CONSTRUCTION TYPE IIB UNPROTECTED (SPRINKLED)

D. FIRE PROTECTION SYSTEMS
1. ENTIRE BUILDING IS SPRINKLERED THROUGHOUT PER VCC 903.1, THE VIRGINIA STATEWIDE FIRE PREVENTION CODE AND NFPA 13 (PER VCC 903.3.1)

E. FIRE RESISTANCE RATING REQUIREMENTS
PER VCC TABLE 601

1. EXTERIOR BEARING WALLS	0 HR.
2. EXTERIOR NON-BEARING WALLS	0 HR.
3. INTERIOR BEARING WALLS	0 HR.
4. INTERIOR NON-BEARING WALLS	0 HR.
5. STRUCTURAL FRAME	0 HR.
6. FLOOR/CEILING CONSTRUCTION	0 HR.
7. ROOF/CEILING CONSTRUCTION	0 HR.

EXTERIOR WALLS BASED ON FIRE SEPARATION DISTANCE (PER VCC TABLE 602):

1. LESS THAN 10'	1 HR.
2. GREATER OR EQUAL TO 10'	0 HR.

ADDITIONAL RATING REQUIREMENTS

1. FIRE WALLS (VCC 706.4)	2 HRS.
2. FIRE BARRIER WALLS (VCC 707.3.9)	2 HRS.
3. EXITS AND STAIR ENCLOSURES	0 HR. (PER VCC 1016.1, EXCEPTION 4)

UNENCLOSED, NON-RATED OPEN STAIRS: VCC 1016.1 EXCEPTION 4 ALLOWS PATH OF EGRESS TRAVEL (250' MAXIMUM) IN BUILDINGS THAT ARE FULLY SPINKLERED TO HAVE OPEN STAIRS AS PART OF THE PATH OF TRAVEL WHEN CONNECTING ONLY THE FIRST AND SECOND FLOORS. USE OF VCC 1016.1 EXCEPTION 4 IS FURTHER REINFORCED BY VCC 708.2 EXCEPTIONS 7.1 AND EXCEPTION 11 WHICH STATES THAT A SHAFT ENCLOSURE IS NOT REQUIRED FOR FLOOR OPENINGS CREATED BY UNENCLOSED STAIRS IN ACCORDANCE WITH VCC 1016.1 EXCEPTION 3 AND EXCEPTION 4.

4. ENCLOSED USABLE SPACE UNDER STAIRS	1 HR. (VCC 1009.6.3)
5. SHAFTS (VCC 716.6.3)	0 HR. NO MORE THAN 2 STORIES AND NON-RATED FLOOR/CEILING ASSEMBLY
6. ELEVATOR SHAFTS	1 HR.
7. CORRIDOR FIRE RATING (VCC TABLE 1018.1) :	OCCUPANCY GROUP E, 0 HR WITH SPRINKLER
8. DRAFTSTOPPING	NOT REQUIRED WITH NON-COMBUSTIBLE CONSTRUCTION
9. INTERIOR FINISHES (VCC 803.9)	CLASS B AND CLASS C DEPENDING ON FUNCTION

F. INCIDENTAL USE AREAS (TABLE 508.2.5)
PROVIDE AUTOMATIC FIRE EXTINGUISHING SYSTEM W/ PARTITIONS THAT RESIST THE PASSAGE OF SMOKE (508.2.5.2).
1. ROOMS WITH BOILERS WHERE THE LARGEST PIECE OF EQUIPMENT IS OVER 15 PSI AND 10 HORSEPOWER.
2. LABORATORIES AND VOCATIONAL SHOPS.
3. LAUNDRY ROOMS OVER 100 SQUARE FEET.

G. AREA ALLOWANCE PER OCCUPANT (PER TABLE 1004.1.1)

1. ACCESSORY STORAGE AREAS, MECHANICAL EQUIPMENT ROOMS	300 SF GROSS
2. ASSEMBLY WITH FIXED SEATS	PER SECTION 1004.7
3. ASSEMBLY, UNCONCENTRATED	15 SF NET
4. BUSINESS AREAS	100 SF GROSS
5. EDUCATIONAL, CLASSROOOM	20 SF NET
6. EDUCATIONAL, VOCATIONAL ROOM AREAS	50 SF NET
7. EXERCISE ROOMS	50 SF GROSS
8. KITCHENS, COMMERCIAL	200 SF GROSS
9. LIBRARY, STACK AREA	100 SF GROSS
10. LOCKER ROOMS	50 SF GROSS
11. STAGES	15 SF NET

H. MEANS OF EGRESS
PER VCC SECTION 1004.1.1, EXCEPTION :
1. WHERE APPROVED BY THE BUILDING OFFICAL, THE ACTUAL NUMBER OF OCCUPANTS FOR WHOM EACH OCCUPIED SPACE, FLOOR OR BUILDING IS DESIGNED, ALTHOUGH LESS THAN THOSE DETERMINED BY THE CALCULATIONS, SHALL BE PERMITTED TO BE USED IN DETERMINATION OF THE DESIGN OCCUPANT LOAD.
2. OCCUPANT LOAD IN FIRE AREA 1 BOTH FLOORS IS DETERMINED BY THE DESIGN OCCUPANT LOAD.
3. OCCUPANT LOAD IN FIRE AREA 2 IS DETERMINED BY USING THE HIGHER NUMBER OF EITHER THE CODE OCCUPANCY OR DESIGN OCCUPANCY.

PER VCC SECTION 1005.1 EGRESS WIDTH PER OCCUPANT (WITH SPRINKLER SYSTEM)

STAIRWAYS:	0.2 PER OCCUPANT
OTHER EGRESS COMPONENTS:	0.15 PER OCCUPANT

VCC 1016.1 TRAVEL DISTANCE LIMITATIONS: EXCEPTION 4, ALLOWS EXIT ACCESS TRAVEL TO AN EXIT USING UNENCLOSED EXIT ACCESS STAIRWAYS IN THE FIRST AND SECOND STORIES ABOVE GRADE IN BUILDINGS EQUIPPED WITH AN AUTOMATIC SPRINKLER SYSTEM.
VCC TABLE 1016.1 EXIT ACCESS TRAVEL DISTANCE: OCCUPANCY GROUP E, 250' WITH SPRINKLER
VCC 1018.4 DEADENDS EXCEPTION 2 AND 3: NO MORE THAN 50' OR NO MORE THAN 2.5 X WIDTH OF CORRIDOR
VCC 1018.2 CORRIDOR WIDTH: 72" MIN W/ LOAD OF 100 OR MORE
VCC 1014.3 COMMON PATH OF EGRESS TRAVEL: 75'
EXITS PER FLOOR (VCC TABLE 1021.1): 2 MIN. FOR 500 OCCUPANTS OR LESS,
3 MIN. FOR MORE THAN 500 OCCUPANTS

EGRESS CAPACITY - REQUIRED: 120"
PROVIDED: 576" EXCLUDING GYM DOORS
TOTAL ALLOWABLE STORY/HEIGHT : 3 STORIES/ 75'-0"
DESIGN STORY/HEIGHT: 2 STORIES/ 35'-5"

J. PLUMBING FIXTURE REQUIREMENTS
DESIGN FOR MAXIMUM 2,338 TOTAL OCCUPANTS (INCLUDES BID ALTERNATE OCCUPANCIES.)

MALE: 20 WC REQUIRED, 17 LAVATORIES REQUIRED - 30 WC PROVIDED, 29 LAVATORIE PROVIDED
FEMALE: 20 WC REQUIRED, 17 LAVATORIES REQUIRED - 30 WC PROVIDED, 29 LAVATORIES PROVIDED (WC AND LAVATORIES COUNT INCLUDES SINGLE OCCUPANT TOILET ROOMS)

ELECTRIC WATER COOLER (EWC): 17 REQUIRED - 20 PROVIDED

SERVICE SINK: 1 REQUIRED - 5 PROVIDED

K. AREA INCREASE CALCULATIONS

AREA INCREASES - FIRE ZONE 1
ALLOWABLE BUILDING AREA PER VUSBC TABLE 503 = 14,500 SF PER STORY

AUTOMATIC SPRINKLER INCREASE PER VUSBC 506.3
200% INCREASE FOR TWO STORY (14,500 X 2) = 29,000 SF INCREASE

AREA MODIFICATIONS PER VUSBC 506.1
[14,500 + (SPRINKLER INCREASE)
[14,500 + (29,000)]
ALLOWABLE BUILDING AREA PER STORY 43,500 SF

TOTAL BUILDING AREA FIRST FLOOR FIRE ZONE 1=
34,589 SF < 43,500 SF - DESIGN COMPLIES
TOTAL BUILDING AREA SECOND FLOOR FIRE ZONE1=
33,578 SF < 43,500 SF - DESIGN COMPLIES

AREA INCREASES - FIRE ZONE 2
ALLOWABLE BUILDING AREA PER VUSBC TABLE 503 = 14,500 SF PER STORY

AUTOMATIC SPRINKLER INCREASE PER VUSBC 506.3
300% INCREASE FOR TWO STORY (14,500 X 3) = 43,500 SF INCREASE

AREA MODIFICATIONS PER VUSBC 506.1
[14,500 + (SPRINKLER INCREASE)
[14,500 +(43,500)]
ALLOWABLE BUILDING AREA PER STORY 58,000 SF

TOTAL BUILDING AREA FIRST FLOOR FIRE ZONE 2=
32,965 SF < 43,500 SF - DESIGN COMPLIES

L. IN-BUILDING COMMUNICATIONS (PER 915)
PRIOR TO INSTALLATION OF FINISHED CEILINGS, THE FIRE MARSHALL SHALL BE ALLOWED ACCESS TO THE SITE AND BUILDING TO CONDUCT A FIELD TEST TO VERIFY THAT THE REQUIRED LEVEL OF RADIO COVERAGE IS PRESENT. THIS TEST SHALL BE CONDUCTED IN ACCORDANCE WITH SECTION 510.3 OF THE VIRGINIA STATEWIDE FIRE PREVENTION CODE AND SECTION 915 OF THE 2009 VIRGINIA UNIFORM STATEWIDE BUILDING CODE.

GENERAL LIFE SAFETY NOTES

1. ALL WALLS DESIGNATED AS FIRE RATED OR RPS (RESIST THE PASSAGE OF SMOKE) PARTITIONS SHALL EXTEND TO THE UNDERSIDE OF ROOF OR FLOOR DECK ABOVE. PROVIDE SPECIFIED FIRE SAFING MATERIAL AT ALL VOIDS AND PENETRATIONS.
2. ALL PENETRATIONS THROUGH FIRE RATED ASSEMBLIES SHALL BE FIRESTOPPED AND SEALED AS REQUIRED TO MAINTAIN INTEGRITY OF THE FIRE RATED ASSEMBLY.

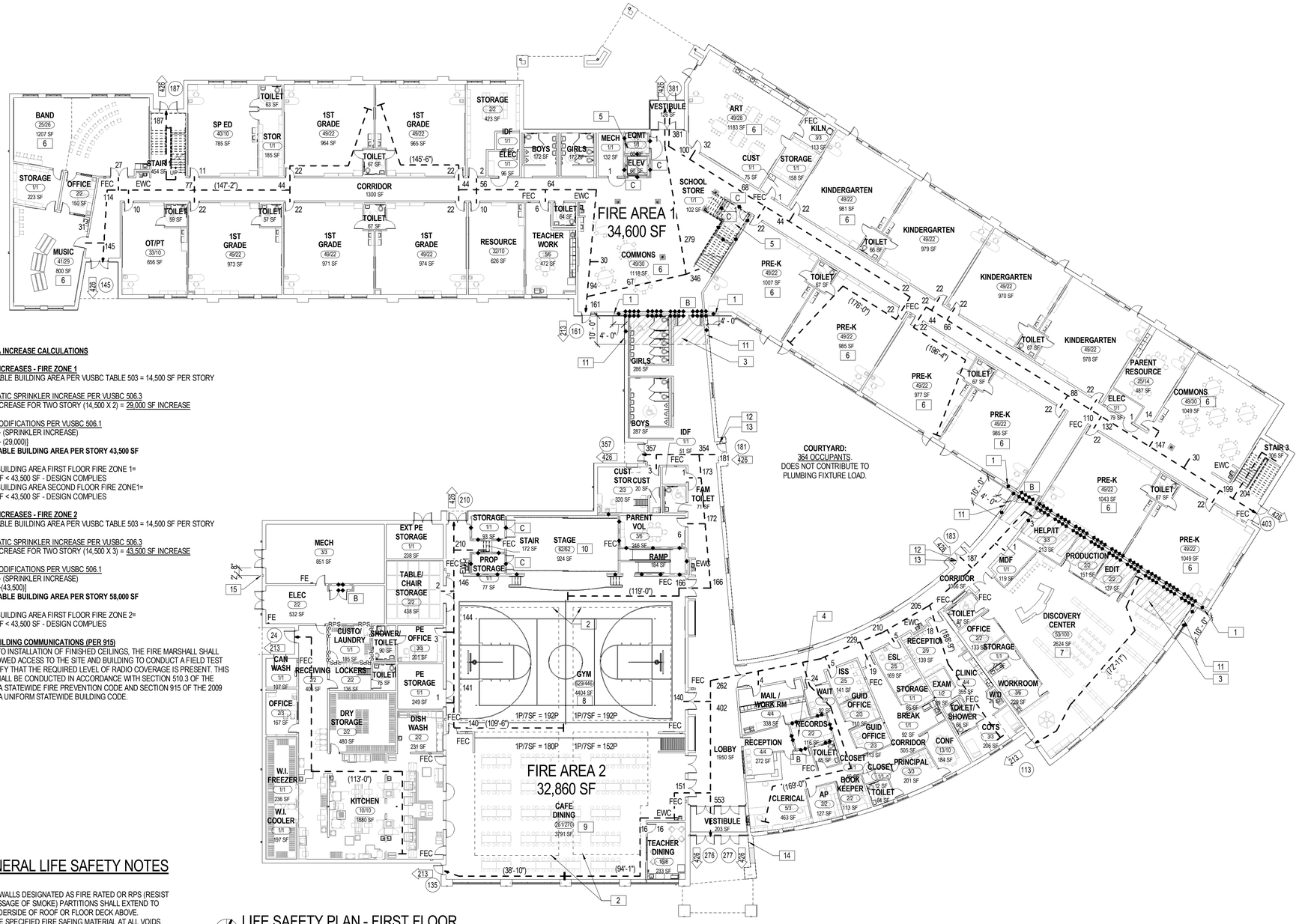

LIFE SAFETY PLAN - FIRST FLOOR

SCALE: 1/16" = 1'-0"

PLAN NORTH

LIFE SAFETY PLAN KEY NOTES (APPLIES TO SHEETS LS-101 & LS-102)

1. 1 HOUR FIRE RESISTANCE RATED EXTERIOR WALL ASSEMBLY PER UL DESIGN NO. U902 ALONG 4' OF EXTERIOR WALL BEYOND FIREWALL, IN ACCORDANCE WITH VUSBC 706.5.1 (1).
2. DASHED AREA INDICATES AREA OF USE WHEN OPERABLE PARTITION IS OPEN. COMBINED USE MAXIMUM OCCUPANCY IS 716. PROVIDE SIGNAGE IN THIS SPACE TO READ "MAXIMUM ALLOWED OCCUPANCY FOR THIS SPACE SHALL NOT EXCEED 716 OCCUPANTS".
3. 1 HOUR FIRE RESISTANCE RATED ROOF ASSEMBLY INCLUDING ROOF STRUCTURE WITH 10' OF FIREWALL PER UL DESIGN NO. P723, IN ACCORDANCE WITH VUSBC 706.6.1, EXCEPTION 1.
4. 2 HOUR FIRE RESISTANCE RATED SHAFTWALL CEILING ASSEMBLY ABOVE SCHEDULED ATC CEILING THIS SPACE PER AER-09038 USING 4" C-H STUDS. BOTTOM OF ASSEMBLY = +12'-0" A.F.F.
5. 1 HOUR FIRE RESISTANCE RATED SHAFTWALL CEILING ASSEMBLY PER AER-09038 USING 4" C-H STUDS.
6. PROVIDE SIGNAGE IN THIS SPACE TO READ "MAXIMUM ALLOWED OCCUPANCY FOR THIS SPACE SHALL NOT EXCEED 49 OCCUPANTS".
7. PROVIDE SIGNAGE IN THIS SPACE TO READ "MAXIMUM ALLOWED OCCUPANCY FOR THIS SPACE SHALL NO EXCEED 100 OCCUPANTS".
8. PROVIDE SIGNAGE IN THIS SPACE TO READ "MAXIMUM ALLOWED OCCUPANCY FOR THIS SPACE SHALL NOT EXCEED 446 OCCUPANTS".
9. PROVIDE SIGNAGE IN THIS SPACE TO READ "MAXIMUM ALLOWED OCCUPANCY FOR THIS SPACE SHALL NOT EXCEED 270 OCCUPANTS".
10. PROVIDE SIGNAGE IN THIS SPACE TO READ "MAXIMUM ALLOWED OCCUPANCY FOR THIS SPACE SHALL NO EXCEED 66 OCCUPANTS".
11. 1 HOUR FIRE RESISTANCE RATED EXTERIOR WALL ASSEMBLY PER UL DESIGN NO. U902 ALONG 10' OF EXTERIOR WALL BEYOND FIREWALL, IN ACCORDANCE WITH VUSBC 706.6.1, EXCEPTION 1.
12. PROVIDE SIGNAGE ON EXTERIOR SIDE OF DOOR TO READ "MAXIMUM ALLOWED OCCUPANCY FOR THIS SPACE SHALL NO EXCEED 364 OCCUPANTS".
13. PROVIDE SIGNAGE ON INTERIOR SIDE OF DOOR TO READ "DOOR SHALL REMAIN UNLOCKED WHILE BUILDING IS OCCUPIED".
14. "KNOCK-BOX 3200 SERIES" OR APPROVED EQUAL AS MFR'S BY KNOX COMPANY. UNIT TO BE RECESSED IN BRICK AT +4'-4" AFF - REF A1/A-402.
15. "KNOCK-BOX 3200 SERIES" OR APPROVED EQUAL AS MFR'S BY KNOX COMPANY. UNIT TO BE RECESSED IN BRICK AT +4'-4" AFF.

LIFE SAFETY PLAN LEGEND

- TWO HOUR FIRE WALL
- RESIST THE PASSAGE OF SMOKE PER VUSBC 508.2.5.2.
- TWO HOUR FIRE BARRIER
- ONE HOUR FIRE BARRIER
- B — 90 MIN RATED DOOR AND FRAME ASSEMBLY
- C — 60 MIN RATED DOOR AND FRAME ASSEMBLY
- CODE OCCUPANCY
- XX / 128 — DESIGN OCCUPANCY
- 440 — EGRESS CAPACITY IN PERSONS FOR OPENING SHOWN
- 54 — CALCULATED OCCUPANCY LOAD AT EXIT LOCATION
- EWC - ELECTRIC WATER COOLER
- NON-FIRE RATED PARTITION, REFER TO SHEET A-002 FOR PARTITION TYPES LEGEND.
- (' - ") — APPROXIMATE MAXIMUM TRAVEL DISTANCE
- XXX / XXX SF — OCCUPANT LOAD
- FEC — RECESSED FIRE EXTINGUISHER & CABINET- REFER TO DETAILS, SHEET LS-102 AND SPECIFICATIONS
- FE — WALL MOUNTED FIRE EXTINGUISHER- REF SPECIFICATIONS
- X — HORIZONTAL EXIT WIDTH REQUIRED (TABLE 1005.1)
- X — HORIZONTAL EXIT WIDTH PROVIDED
- 1-HOUR RATED SHAFT WALL CEILING ASSEMBLY (AER-09038)
- 1-HOUR FIRE RESISTANCE RATED FLOOR/ CEILING ASSEMBLY (UL DESIGN NO. P723) REF. SECTIONS & DETAILS

Received by SBBCC 3.2.2015

S.B. Ballard Construction Company
RRMM ARCHITECTS
WALLER TODD & SADLER ARCHITECTS
The Livas Group Architects, P.C.

MARK	DATE	BY	DESCRIPTION

REVISIONS

DATE	03-03-2015
PROJECT	10105.22
DESIGNED	LRS
DRAWN	HJH
CHECKED	DRJ

COMMONWEALTH OF VIRGINIA
C. DUANE M. HARVER
Lic. No. 6310
03/03/15
ARCHITECT

PROJECT
CITY OF NORFOLK AND NORFOLK PUBLIC SCHOOLS
BROAD CREEK IB ELEMENTARY SCHOOL
NORFOLK, VIRGINIA

SBBCC PROJECT NUMBER: NPS-2014-317
VIRGINIA DEPARTMENT OF EDUCATION 118-46-00-100

DRAWING
LIFE SAFETY PLAN - FIRST FLOOR

SHEET
LS-101

C:\Users\rgossett\Documents\10105.22 Broad Creek Elem School - Central_rgossett.rvt
3/3/2015 5:22:55 PM

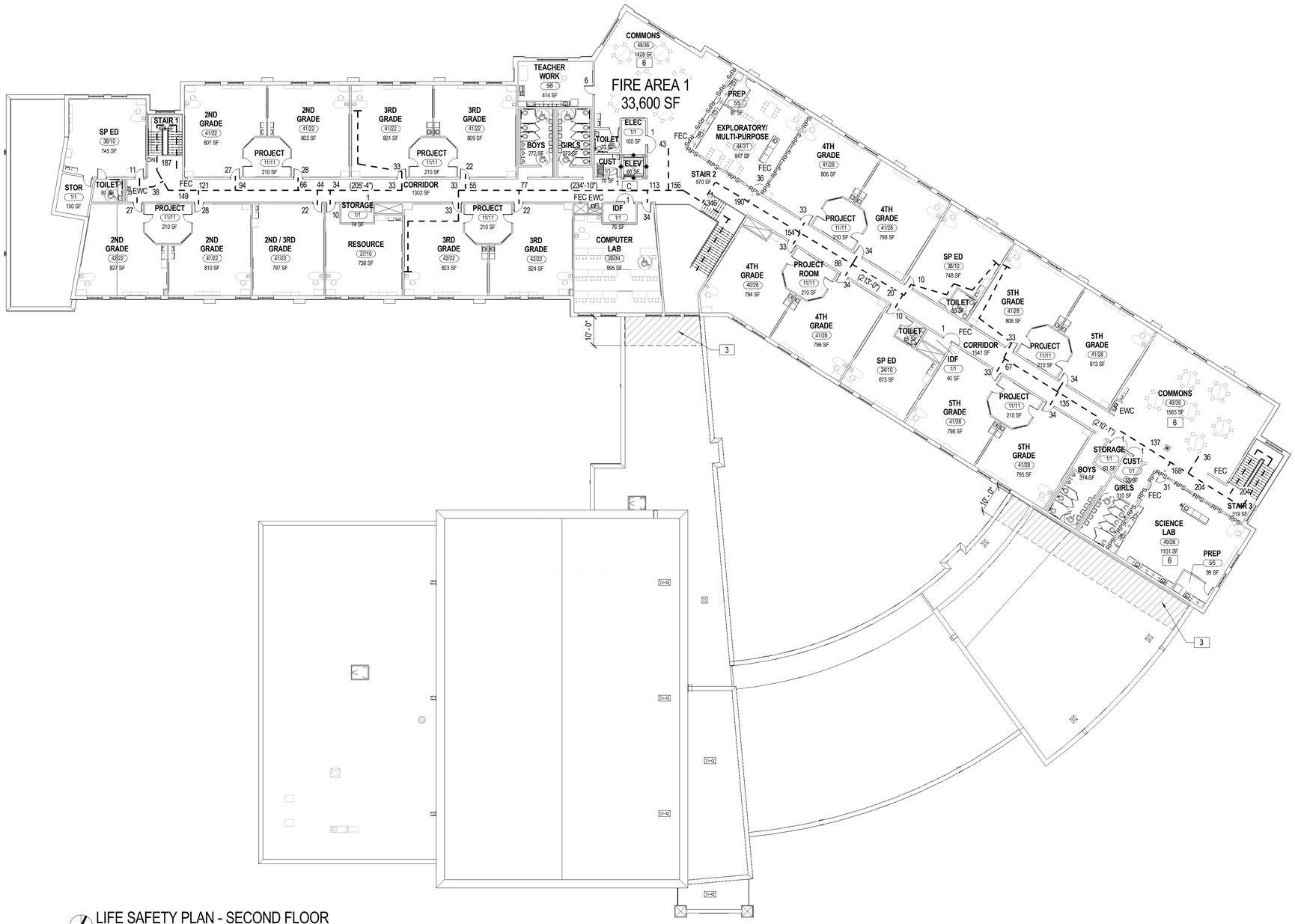

LIFE SAFETY PLAN - SECOND FLOOR

SCALE: 1/16" = 1'-0"

PLAN NORTH

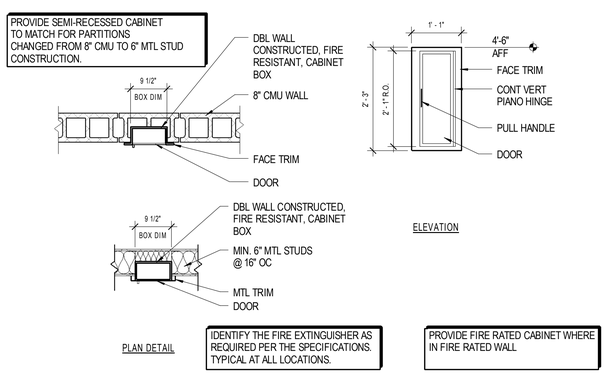

A1 LS-102 FIRE EXTINGUISHER CABINET DETAILS

SCALE: 3/4" = 1'-0"

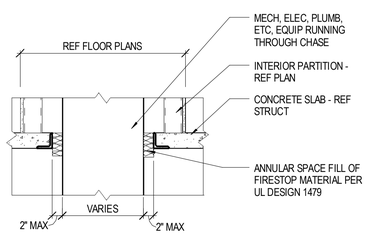

A3 LS-102 CHASE FIRESTOP DETAIL

SCALE: 1" = 1'-0"

LIFE SAFETY PLAN LEGEND

- TWO HOUR FIRE WALL
- RESIST THE PASSAGE OF SMOKE PER VUSBC 508.2.5.2.
- TWO HOUR FIRE BARRIER
- ONE HOUR FIRE BARRIER
- B — 90 MIN RATED DOOR AND FRAME ASSEMBLY
- C — 60 MIN RATED DOOR AND FRAME ASSEMBLY
- CODE OCCUPANCY / DESIGN OCCUPANCY
- EGRESS CAPACITY IN PERSONS FOR OPENING SHOWN
- CALCULATED OCCUPANCY LOAD AT EXIT LOCATION
- EWC - ELECTRIC WATER COOLER
- NON-FIRE RATED PARTITION, REFER TO SHEET A-002 FOR PARTITION TYPES LEGEND.
- APPROXIMATE MAXIMUM TRAVEL DISTANCE
- XXX / XXX SF — OCCUPANT LOAD
- FEC — RECESSED FIRE EXTINGUISHER & CABINET- REFER TO DETAILS, SHEET LS-102 AND SPECIFICATIONS
- FE — WALL MOUNTED FIRE EXTINGUISHER- REF SPECIFICATIONS
- HORIZONTAL EXIT WIDTH REQUIRED (TABLE 1005.1)
- HORIZONTAL EXIT WIDTH PROVIDED
- 1-HOUR RATED SHAFT WALL CEILING ASSEMBLY (AER-09038)
- 1-HOUR FIRE RESISTANCE RATED FLOOR/ CEILING ASSEMBLY (UL DESIGN NO. P723) REF. SECTIONS & DETAILS

Received by SBBCC 3.2.2015

S.B. Ballard Construction Company

RRMM ARCHITECTS

WALLER TODD & SADLER ARCHITECTS

The Livas Group Architects, P.C.

MARK	DATE	REVISIONS	BY	DESCRIPTION

DATE	03-03-2015
PROJECT	10105.22
DESIGNED	LRS
DRAWN	HJH
CHECKED	DRJ

COMMONWEALTH OF VIRGINIA
DUANE M. HARVER
Lic. No. 6310
03/03/15
ARCHITECT

SBBCC PROJECT NUMBER: NFS-2014-317
VIRGINIA DEPARTMENT OF EDUCATION: 118-48-00-100

PROJECT: CITY OF NORFOLK AND NORFOLK PUBLIC SCHOOLS
BROAD CREEK IB ELEMENTARY SCHOOL
NORFOLK, VIRGINIA

DRAWING: LIFE SAFETY PLAN - SECOND FLOOR

SHEET

LS-102

C:\Users\rgossett\Documents\10105-22 Broad Creek Elem School - Central_rgossett.rvt

3/3/2015 5:23:05 PM

FIRST FLOOR OCCUPANCY SCHEDULE - FIRE ZONE 1

NUMBER	ROOM NAME	OCCUPANCY	OCCUPANT LOAD FACTOR	AREA	NUMBER OF OCCUPANTS	CODE/ POSTED OCCUPANCY	DESIGN BASED OCCUPANCY	Fire Zone
A101	STAIR 1	(none)		454 SF				1
A102	SP ED	Educational Classrooms	20 SF	785 SF	40	40	10	1
A103	TOILET	(none)		63 SF				1
A104	STOR	Accessory Storage Areas	300 SF	185 SF	1	1	1	1
A105	1ST GRADE	Educational Classrooms	20 SF	964 SF	49	49	22	1
A106	TOILET	(none)		67 SF				1
A107	1ST GRADE	Educational Classrooms	20 SF	965 SF	49	49	22	1
A108	CORRIDOR	(none)		1300 SF				1
A109	STORAGE	Accessory Storage Areas	300 SF	423 SF	2	2	2	1
A110	IDF	Mechanical Equipment Room	300 SF	46 SF	1	1	1	1
A110.1	ELEC	Mechanical Equipment Room	300 SF	96 SF	1	1	1	1
A111	BOYS	(none)		172 SF				1
A112	GIRLS	(none)		172 SF				1
A113	MECH	Mechanical Equipment Room	300 SF	132 SF	1	1	1	1
A114	ELEV	(none)		60 SF				1
A115	EQMT	Mechanical Equipment Room	300 SF	60 SF	1	1	1	1
A116	VESTIBULE	(none)		126 SF				1
A117	ART	Educational Vocational Areas	50 SF	1183 SF	24	49	28	1
A118	KILN	Educational Vocational Areas	50 SF	113 SF	3	3	3	1
A119	STORAGE	Accessory Storage Areas	300 SF	158 SF	1	1	1	1
A120	CUST	Accessory Storage Areas	300 SF	75 SF	1	1	1	1
A121	KINDERGARTEN	Educational Classrooms	20 SF	981 SF	50	49	22	1
A122	PRE-K	Educational Classrooms	20 SF	1007 SF	51	49	22	1
A123	SCHOOL STORE	Business	100 SF	102 SF	2	1	1	1
A124	STAIR 2	(none)		1229 SF				1
A128	COMMONS	Educational Vocational Areas	50 SF	1118 SF	23	49	30	1
A129	TOILET	(none)		64 SF				1
A130	TEACHER WORK	Business	100 SF	472 SF	5	5	6	1
A131	RESOURCE	Educational Classrooms	20 SF	626 SF	32	32	10	1
A132	1ST GRADE	Educational Classrooms	20 SF	974 SF	49	49	22	1
A133	TOILET	(none)		67 SF				1
A134	1ST GRADE	Educational Classrooms	20 SF	971 SF	49	49	22	1
A135	TOILET	(none)		57 SF				1
A136	1ST GRADE	Educational Classrooms	20 SF	973 SF	49	49	22	1
A137	TOILET	(none)		59 SF				1
A138	OT/PT	Educational Classrooms	20 SF	656 SF	33	33	10	1
A139	CORRIDOR	(none)		279 SF				1
A140	MUSIC	Educational Classrooms	20 SF	800 SF	41	41	29	1
A141	OFFICE	Business	100 SF	150 SF	2	2	2	1
A142	STORAGE	Accessory Storage Areas	300 SF	223 SF	1	1	1	1
A143	BAND	Educational Vocational Areas	50 SF	1207 SF	25	25	26	1
B101	TOILET	(none)		66 SF				1
B102	KINDERGARTEN	Educational Classrooms	20 SF	979 SF	49	49	22	1
B103	KINDERGARTEN	Educational Classrooms	20 SF	970 SF	49	49	22	1
B104	TOILET	(none)		67 SF				1
B105	KINDERGARTEN	Educational Classrooms	20 SF	978 SF	49	49	22	1
B107	PARENT RESOURCE	Educational Classrooms	20 SF	487 SF	25	25	14	1
B108	COMMONS	Educational Vocational Areas	50 SF	1049 SF	21	49	30	1
B109	STAIR 3	(none)		306 SF				1
B110	TOILET	(none)		67 SF				1
B111	PRE-K	Educational Classrooms	20 SF	1049 SF	53	49	22	1
B121	PRE-K	Educational Classrooms	20 SF	1043 SF	53	49	22	1
B122	PRE-K	Educational Classrooms	20 SF	985 SF	50	49	22	1
B123	TOILET	(none)		67 SF				1
B124	PRE-K	Educational Classrooms	20 SF	977 SF	49	49	22	1
B125	PRE-K	Educational Classrooms	20 SF	985 SF	50	49	22	1
B126	TOILET	(none)		67 SF				1
B127	ELEC	Mechanical Equipment Room	300 SF	79 SF	1	1	1	1
				29835 SF		1100	540	

FIRST FLOOR OCCUPANCY SCHEDULE - FIRE ZONE 2

NUMBER	ROOM NAME	OCCUPANCY	OCCUPANT LOAD FACTOR	AREA	NUMBER OF OCCUPANTS	CODE/ POSTED OCCUPANCY	DESIGN BASED OCCUPANCY	Fire Zone
A125	CORRIDOR	(none)		512 SF				2
A126	BOYS	(none)		287 SF				2
A127	GIRLS	(none)		286 SF				2
B112	PRODUCTION	Business	100 SF	151 SF	2	2	2	2
B113	EDIT	Business	100 SF	137 SF	2	2	2	2
B114	DISCOVERY CENTER	Library Reading Rooms	50 SF	2624 SF	53	53	100	2
B115	WORKROOM	Business	100 SF	229 SF	3	3	6	2
B116	STORAGE	Accessory Storage Areas	300 SF	77 SF	1	1	1	2
B117	OFFICE	Business	100 SF	133 SF	2	2	2	2
B118	TOILET	(none)		87 SF				2
B119	MDF	Mechanical Equipment Room	300 SF	119 SF	1	1	1	2
B120	HELP/IT	Business	100 SF	213 SF	3	3	3	2
C101	CORRIDOR	(none)		1066 SF				2
C102	RECEPTION	Business	100 SF	139 SF	2	2	9	2
C103	CLINIC	Business	100 SF	355 SF	4	4	4	2
C104	W/D	(none)		24 SF				2
C105	COTS	Business	100 SF	206 SF	3	3	3	2
C106	TOILET/ SHOWER	(none)		66 SF				2
C107	EXAM	Business	100 SF	89 SF	1	1	2	2
C108	ESL	Business	100 SF	169 SF	2	2	5	2
C109	ISS	Business	100 SF	141 SF	2	2	5	2
C110	BREAK	Business	100 SF	92 SF	1	1	1	2
C111	CONF	Assembly - Unconcentrated	15 SF	184 SF	13	13	10	2
C112	PRINCIPAL	Business	100 SF	201 SF	2	3	3	2
C113	TOILET	(none)		64 SF				2
C114	CLOSET	Accessory Storage Areas	300 SF	12 SF	1	1	1	2
C115	BOOK KEEPER	Business	100 SF	113 SF	2	2	2	2
C116	AP	Business	100 SF	127 SF	2	2	2	2
C117	CORRIDOR	(none)		505 SF				2
C118	STORAGE	Accessory Storage Areas	300 SF	85 SF	1	1	1	2
C119	GUID OFFICE	Business	100 SF	110 SF	2	2	3	2
C120	GUID OFFICE	Business	100 SF	113 SF	2	2	3	2
C121	WAIT	Business	100 SF	92 SF	1	1	2	2
C122	RECORDS	Accessory Storage Areas	300 SF	116 SF	1	2	2	2
C123	TOILET	(none)		65 SF				2
C124	CLERICAL	Business	100 SF	463 SF	5	5	3	2
C125	RECEPTION	Business	100 SF	272 SF	3	4	4	2
C126	MAIL / WORK RM	Business	100 SF	338 SF	4	4	4	2
C127	LOBBY	(none)		1950 SF				2
C128	VESTIBULE	(none)		203 SF				2
C129	TEACHER DINING	Assembly - Unconcentrated	15 SF	233 SF	16	16	8	2
C130	CAFE DINING	Assembly - Unconcentrated	15 SF	3791 SF	253	251	270	2
C131	KITCHEN	Kitchens	200 SF	1880 SF	10	10	10	2
C132	W.I. COOLER	Accessory Storage Areas	300 SF	197 SF	1	1	1	2
C133	W.I. FREEZER	Accessory Storage Areas	300 SF	236 SF	1	1	1	2
C134	DISH WASH	Kitchens	200 SF	231 SF	2	2	2	2
C135	DRY STORAGE	Accessory Storage Areas	300 SF	480 SF	2	2	2	2
C136	TOILET	(none)		75 SF				2
C137	LOCKERS	Business	100 SF	136 SF	2	2	2	2
C138	RECEIVING	Accessory Storage Areas	300 SF	405 SF	2	2	2	2
C139	OFFICE	Business	100 SF	167 SF	2	2	3	2
C140	CAN WASH	Accessory Storage Areas	300 SF	107 SF	1	1	1	2
C141	CUSTO/ LAUNDRY	Mechanical Equipment Room	300 SF	185 SF	1	1	1	2
C142	ELEC	Mechanical Equipment Room	300 SF	532 SF	2	2	2	2
C143	MECH	Mechanical Equipment Room	300 SF	851 SF	3	3	3	2
C144	EXT PE STORAGE	Accessory Storage Areas	300 SF	238 SF	1	1	1	2
C145	TABLE/ CHAIR STORAGE	Accessory Storage Areas	300 SF	438 SF	2	2	2	2
C146	SHOWER/ TOILET	(none)		90 SF				2
C147	PE OFFICE	Business	100 SF	201 SF	3	3	3	2
C148	PE STORAGE	Accessory Storage Areas	300 SF	249 SF	1	1	1	2
C149	GYM	Assembly - Concentrated	7 SF	4404 SF	630	629	446	2
C150	STAIR	(none)		172 SF				2
C151	STORAGE	Accessory Storage Areas	300 SF	93 SF	1	1	1	2
C152	STAGE	Stages and Platforms	15 SF	924 SF	62	62	62	2
C153	PROP STORAGE	Accessory Storage Areas	300 SF	77 SF	1	1	1	2
C154	PARENT VOL	Business	100 SF	246 SF	3	3	6	2
C155	FAM TOILET	(none)		71 SF				2
C156	CUST	(none)		20 SF		1	1	2
C158	CUST STOR	Accessory Storage Areas	300 SF	320 SF	2	2	3	2
C160	IDF	Mechanical Equipment Room	300 SF	51 SF	1	1	1	2
C161	ELEC CLOSET	(none)		11 SF				2
C163	COURTYARD	(none)		7277 SF		0	0	2
				36600 SF		1127	1022	

SECOND FLOOR OCCUPANCY SCHEDULE - FIRE ZONE 1

NUMBER	ROOM NAME	OCCUPANCY	OCCUPANT LOAD FACTOR	AREA	NUMBER OF OCCUPANTS	CODE/ POSTED OCCUPANCY	DESIGN BASED OCCUPANCY	Fire Zone
A201	SP ED	Educational Classrooms	20 SF	745 SF	38	38	10	1
A202	TOILET	(none)		81 SF				1
A203	STAIR 1	(none)		428 SF				1
A204	2ND GRADE	Educational Classrooms	20 SF	807 SF	41	41	22	1
A205	PROJECT	Educational Classrooms	20 SF	210 SF	11	11	11	1
A206	2ND GRADE	Educational Classrooms	20 SF	803 SF	41	41	22	1
A207	3RD GRADE	Educational Classrooms	20 SF	801 SF	41	41	22	1
A208	CORRIDOR	(none)		1302 SF				1
A209	PROJECT	Educational Classrooms	20 SF	210 SF	11	11	11	1
A210	3RD GRADE	Educational Classrooms	20 SF	809 SF	41	41	22	1
A211	BOYS	(none)		272 SF				1
A212	GIRLS	(none)		272 SF				1
A213	TEACHER WORK	Business	100 SF	414 SF	5	5	6	1
A214	COMMONS	Educational Vocational Areas	50 SF	1428 SF	29	49	36	1
A215	TOILET	(none)		70 SF				1
A216	CUST	Accessory Storage Areas	300 SF	70 SF	1	1	1	1
A217	ELEV	(none)		60 SF				1
A218	ELEC	Mechanical Equipment Room	300 SF	100 SF	1	1	1	1
A219	EXPLORATORY/ MULTI-PURPOSE	Educational Classrooms	20 SF	847 SF	43	44	31	1
A220	4TH GRADE	Educational Classrooms	20 SF	806 SF	41	41	28	1
A221	PROJECT	Educational Classrooms	20 SF	210 SF	11	11	11	1
A223	PROJECT ROOM	Educational Classrooms	20 SF	210 SF	11	11	11	1
A224	4TH GRADE	Educational Classrooms	20 SF	794 SF	40	40	28	1
A225	STAIR 2	(none)		570 SF				1
A226	COMPUTER LAB	Educational Vocational Areas	50 SF	995 SF	20	20	34	1
A227	IDF	Mechanical Equipment Room	300 SF	76 SF	1	1	1	1
A228	3RD GRADE	Educational Classrooms	20 SF	824 SF	42	42	22	1
A229	PROJECT	Educational Classrooms	20 SF	210 SF	11	11	11	1
A230	3RD GRADE	Educational Classrooms	20 SF	823 SF	42	42	22	1
A231	RESOURCE	Educational Classrooms	20 SF	738 SF	37	37	10	1
A232	STORAGE	Accessory Storage Areas	300 SF	74 SF	1	1	1	1
A233	2ND / 3RD GRADE	Educational Classrooms	20 SF	797 SF	40	41	22	1
A234	2ND GRADE	Educational Classrooms	20 SF	810 SF	41	41	22	1
A235	PROJECT	Educational Classrooms	20 SF	210 SF	11	11	11	1
A236	2ND GRADE	Educational Classrooms	20 SF	827 SF	42	42	22	1
A237	STOR	Accessory Storage Areas	300 SF	150 SF	1	1	1	1
A238	PREP	Educational Classrooms	20 SF	87 SF	5	5	5	1
B201	4TH GRADE	Educational Classrooms	20 SF	798 SF	40	41	28	1
B202	SP ED	Educational Classrooms	20 SF	748 SF	38	38	10	1
B203	TOILET	(none)		65 SF				1
B204	5TH GRADE	Educational Classrooms	20 SF	806 SF	41	41	28	1
B205	PROJECT	Educational Classrooms	20 SF	210 SF	11	11	11	1
B206	5TH GRADE	Educational Classrooms	20 SF	813 SF	41	41	28	1
B207	COMMONS	Educational Vocational Areas	50 SF	1565 SF	32	49	36	1
B208	STAIR 3	(none)		319 SF				1
B209	SCIENCE LAB	Educational Vocational Areas	50 SF	1101 SF	23	49	26	1
B210	PREP	Educational Vocational Areas	50 SF	99 SF	2	5	5	1
B212	5TH GRADE	Educational Classrooms	20 SF	795 SF	40	41	28	1
B213	PROJECT	Educational Classrooms	20 SF	210 SF	11	11	11	1
B214	5TH GRADE	Educational Classrooms	20 SF	798 SF	40	41	28	1
B215	IDF	Mechanical Equipment Room	300 SF	40 SF	1	1	1	1
B216	TOILET	(none)		65 SF				1
B217	SP ED	Educational Classrooms	20 SF	673 SF	34	34	10	1
B218	4TH GRADE	Educational Classrooms	20 SF	796 SF	40	41	28	1
				28840 SF		1166	735	

BASE BID BUILDING OCCUPANCY: 2,310 OCCUPANTS

BID ALTERNATE NO.1 BUILDING OCCUPANCY: 2,338 OCCUPANTS

Received by SBBCC 3.2.2015

S.B. Ballard Construction Company

RRMM ARCHITECTS

WALLER TODD & SADLER ARCHITECTS

The Livas Group Architects, P.C.

MARK	DATE	BY	DESCRIPTION
REVISIONS			

DATE	03-03-2015
PROJECT	10105.22
DESIGNED	LRS
DRAWN	HJH
CHECKED	DRJ

COMMONWEALTH OF VIRGINIA
C. DUANE M. HARVER
Lic. No. 6310
03/03/15
ARCHITECT

SBBCC PROJECT NUMBER: NPS-2014-317
VIRGINIA DEPARTMENT OF EDUCATION: 118-46-00-100

PROJECT
CITY OF NORFOLK AND NORFOLK PUBLIC SCHOOLS
BROAD CREEK IB ELEMENTARY SCHOOL
NORFOLK, VIRGINIA

DRAWING
LIFE SAFETY OCCUPANT LOAD TABLE

SHEET
LS-103

C:\Users\rgossett\Documents\10105-22 Broad Creek Elem School - Central_cgossett.rvt

3/3/2015 5:23:13 PM

ARCHITECTURAL ABBREVIATIONS

Ω	ARC LENGTH DIMENSION
#	NUMBER
&, +	AND
+/-	PLUS OR MINUS
@	AT
°	DEGREES
Ø	DIAMETER
A/C	AIR CONDITIONING
AB	ANCHOR BOLT
ABV	ABOVE
ACM	ASBESTOS CONTAINING MATERIAL
ACP	ACOUSTIC CEILING PANEL
ACT	ACOUSTIC CEILING TILE
ADDN	ADDITION
ADH	ADHESIVE
ADJ	ADJUSTABLE
AFF	ABOVE FINISH FLOOR
AGG	AGGREGATE
AHU	AIR HANDLING UNIT
AL	ALUMINUM
ALT	ALTERNATE
AMP, A	AMPERE
ANCH	ANCHOR, ANCHORAGE
ANOD	ANODIZED
AP	ACCESS POINT
APC	ARCHITECTURAL PRECAST CONCRETE
APPROX	APPROXIMATE
AR	ABUSE RESISTANT
ARCH	ARCHITECT, ARCHITECTURAL
ASB	ASBESTOS
ASPH	ASPHALT
ATTEN	ATTENUATION
AUTO	AUTOMATIC
AVG	AVERAGE
AWP	ACOUSTIC WALL PANEL
BC	BOTTOM OF CURB
BD	BOARD
BEJ	BUILDING EXPANSION JOINT
BETW	BETWEEN
BIT	BITUMINOUS
BL	BLEACHER FINISH
BLDG	BUILDING
BLK	BLOCK
BLKG	BLOCKING
BM	BEAM
BO	BOTTOM OF
BOT, B	BOTTOM
BRG	BEARING
BRK	BRICK
BS	BOTH SIDES
BSMT	BASEMENT
BTWN, B/W	BETWEEN
BUR	BUILT-UP ROOFING
BVL	BEVELED
C	CARPET
CAB	CABINET
CAP	CAPACITY
CB	CHALKBOARD
CC	CUBICAL CURTAIN
CCTV	CLOSED CIRCUIT TELEVISION
CEM	CEMENT
CEM TOP	CEMENT TOPPING
CER	CERAMIC
CF	CUBIC FOOT
CFLSHG	COUNTER FLASHING
CFM	CUBIC FEET PER MINUTE
CG	CORNER GUARD
CHAM	CHAMFER
CI	CAST IRON
CIP	CASED IN PLACE
CIR	CIRCLE
CJ	CONTROL JOINT
CK	CAULK, CAULKING
CLG	CEILING
CLO	CLOSET
CLR	CLEAR
CM	CENTIMETER, CENTIMETERS
CMP	CORRUGATED METAL PIPE
CMU	CONCRETE MASONRY UNIT
CNTR	COUNTER
CO	CLEAN OUT
COL	COLUMN
COMM	COMMUNICATION
COMP	COMPOSITE
CONC	CONCRETE
CONN	CONNECTION
CONST	CONSTRUCTION
CONT	CONTINUOUS
CONTR	CONTRACT, CONTRACTOR
CORR	CORRUGATED
CPT	CARPET
CRS	COURSE. COURSES
CSMT	CASEMENT
CSWK	CASEWORK
CT	CERAMIC TILE
CTB	CERAMIC TILE BASE
CU FT	CUBIC FEET
CU YD	CUBIC YARD
CUH	CABINET UNDER HEATER
CW	COLD WATER
CWFP	CEMENTITIOUS WOOD FIBER PANELS
D	DEEP, DEPTH, DRAIN
DBL	DOUBLE
DEMO	DEMOLITION
DET	DETAIL
DF	DRINKING FOUNTAIN
DH	DOUBLE HUNG
DIA	DIAMETER
DIAG	DIAGONAL
DIM	DIMENSION
DISP	DISPOSAL
DIV	DIVISION
DL	DEAD LOAD
DMT	DEMOUNTABLE
DN	DOWN
DPG	DAMPPROOFING
DPR	DISPENSER
DR	DOOR, DISPLAY RAIL
DS	DOWNSPOUT
DWG	DRAWING
DWR	DRAWER
E	EAST
EA	EACH
EF	EXHAUST FAN
EFS	EXTERIOR FINISH SYSTEM
EIFS	EXTERIOR INSULATION FINISH SYSTEM
EJ	EXPANSION JOINT
ELAS	ELASTOMERIC
ELEC	ELECTRICAL
ELEV	ELEVATION, ELEVATOR
EM	ENTRANCE MAT
EMER	EMERGENCY
ENCL	ENCLOSE, ENCLOSURE
EP	ELECTRICAL PANELBOARD
EPDM	ETHYLENE PROPYLENE DIENE MONOMER
EPS	EXPANDED POLYSTYRENE
EPX	EPOXY
EQ	EQUAL
EQUIP	EQUIPMENT
EST	ESTIMATE
EWC	ELECTRIC WATER COOLER
EXCA	EXCAVATE
EXH	EXHAUST
EXIST	EXISTING
EXP	EXPOSED / EXPANSION
EXP C	EXPANSION CONSTRUCTION
EXT	EXTERIOR
FAB	FABRICATE
FAS	FASTEN, FASTENER
FB	FACE BRICK
FCVD	FLASH COVED
FD	FLOOR DRAIN, FIRE DAMPER
FDN	FOUNDATION
FE	FIRE EXTINGUISHER
FEC	FIRE EXTINGUISHER CABINET
FEJ	FLOOR EXPANSION JOINT
FF	FINISH FLOOR
FFE	FINISH FLOOR ELEVATION
FG	FIBER REINFORCED GYPSUM BOARD
FGL	FIBERGLASS
FH	FIRE HYDRANT
FHC	FIRE HOSE CABINET
FIN	FINISH, FINISHED
FIX	FIXTURE
FLEX	FLEXIBLE
FLR	FLOOR
FLSHG	FLASHING
FLUOR	FLUORESCENT
FLUR	FLUORESCENT
FND	FEMININE NAPKIN DISPENSER
FOC	FACE OF CONCRETE
FOM	FACE OF MASONRY
FOS	FACE OF STUDS
FP	FIREPROOF
FPL	FIREPLACE
FR	FIRE RATED
FRG	(GLASS) FIBER REINFORCED GYPSUM
FRM	FRAME, FRAMED
FRMG	FRAMING
FRP	FIBERGLASS REINFORCED PLASTIC
FRT	FIRE RETARDANT TREATED
FT	FOOT, FEET
FTG	FOOTING
FUM	FUME HOOD
FUR	FURRED, FURRING
FURN	FURNITURE
FURR	FURRING
G	GAS
GA	GAUGE
GAL	GALLON
GALV	GALVANIZED
GB	GRAB BAR
GC	GENERAL CONTRACT, CONTRACTOR
GCMU	GLAZED FIBER REINFORCED CONCRETE
GEN	GENERAL
GFRC	GLASS FIBER REINFORCED CONCRETE
GL	GLASS, GLAZING
GPM	GALLONS PER MINUTE
GR	GRADE / GROUT
GSU	GLAZED STRUCTURAL UNIT
GWB	GYPSUM WALLBOARD
GWT	GLAZED WALL TILE
GYP	GYPSUM
H	HIGH
H/C	HANDICAPPED
HB	HOSE BIB
HC	HOLLOW CORE
HDBD	HARDBOARD
HDWD	HARDWOOD
HDWR	HARDWARE
HGT	HEIGHT
HM	HOLLOW METAL
HORIZ	HORIZONTAL
HP	HIGH POINT
HR	HOUR
HTG	HEATING
HVAC	HEATING, VENTILATION AND AIR CONDITIONING
HW	HOT WATER
HWH	HOT WATER HEATER
ID	INSIDE DIAMETER
IN	INCH
INCL	INCLUDE, INCLUDED, INCLUDING
INFO	INFORMATION
INST	INSTALLATION
INSUL	INSULATE, INSULATED, INSULATION
INT	INTERIOR
INTRLK	INTERLOCK
INV	INVERT
JAN	JANITOR
JB	JUNCTION BOX
JC	JANITOR CLOSET
JCT	JUNCTION
JST	JOIST
JT	JOINT
KIT	KITCHEN
KO	KNOCKOUT
KV	KILOVOLT
KVA	KILOVOLT AMPERE
KW	KILOWATT
L	LENGTH, LONG, LOW
LAB	LABORATORY
LAM	LAMINATE
LAV	LAVATORY
LB	POUND
LF	LINEAR FEET
LG	LAMINATED GLASS
LH	LEFT HAND
LIN	LINEAR
LK	LOCKER
LLH	LONG LEG HORIZONTAL
LLV	LONG LEG VERTICAL
LP	LOW POINT
LTG	LIGHTING
LTL	LINTEL
LVR	LOUVER
LW	LIGHTWEIGHT
M	METER
M/S	MOP SINK
MACH	MACHINE
MAINT	MAINTENANCE
MANUF	MANUFACTURE, MANUFACTURER
MAR	MARBLE
MAS	MASONRY
MATL	MATERIAL
MAX	MAXIMUM
MB	MARKERBOARD
MBR	MODIFIED BITUMEN ROOF
MECH	MECHANIC, MECHANICAL
MED	MEDIUM
MEMB	MEMBRANE
MH	MANHOLE
MIN	MINIMUM
MIR	MIRROR
MISC	MISCELLANEOUS
MLD	MOLDING
MM	MILLIMETER
MO	MASONRY OPENING
MOD	MODIFIED
MOV	MOVABLE
MR	MAP RAIL
MT	MOUNT
MTD	MOUNTED, MOUNTING
MTL	METAL
MULL	MULLION
MWP	MEMBRANE WATERPROOFING
N	NORTH
N/C	NO CHARGE
NAT	NATURAL
NIC	NOT IN CONTRACT
NO	NUMBER
NOM	NOMINAL
NRC	NOISE REDUCTION COEFFICIENT
NTS	NOT TO SCALE
OA	OVERALL
OBS	OBSCURE
OC	ON CENTER
OD	OUTSIDE DIAMETER
OF/CI	OWNER FURNISHED / CONTRACTOR INSTALLED
OH	OVERHEAD
OPNG	OPENING
OPP	OPPOSITE
P	PLATE
PAR	PARALLEL
PART	PARTIAL
PC	PRE-CAST, PIECE
PED	PEDESTAL
PERF	PERFORATE (D)
PERM	PERIMETER
PIP	POURED IN PLACE
PL	PROPERTY LINE / PLASTIC LAMINATE
PLAM	PLASTIC LAMINATE
PLAS	PLASTER
PLUMB	PLUMBING
PLYWD	PLYWOOD
PNL	PANEL
POLY	POLYURETHANE
PORT	PORCELAIN TILE
PORTB	PORCELAIN TILE BASE
PPT	PRESERVATIVE PRESSURE TREATED
PR	PAIR
PREFAB	PREFABRICATE, PREFABRICATED
PREFIN	PRE-FINISHED
PRJ SC	PROJECTION SCREEN
PRT	PORCELAIN TILE
PS	PENCIL SHARPENER
PSF	POUNDS PER SQUARE FOOT
PSI	POUNDS PER SQUARE INCH
PT	PAINT
PTD	PAINTED
PTN	PARTITION
PVC	POLYVINYL CHLORIDE / PVC EDGE BAND
PVMT	PAVEMENT
QT	QUARRY TILE
QTY	QUANTITY
R	RISER, RIDGE
R/W	RIGHT OF WAY
RA	RETURN AIR
RAD	RADIUS
RAS	RESILIENT ATHLETIC SURFACING
RB	RESILIENT BASE
RCP	REFLECTED CEILING PLAN
RD	ROOD DRAIN
RECP	RECEPTACLE
REF	REFERENCE
REFRIG	REFIGERATOR
REINF	REINFORCE, REINFORCED, REINFORCING
REM	REMOVE
REQD	REQUIRED
REQMT	REQUIREMENT
RESIL	RESILIENT
RET	RETURN
REV	REVISION, REVISIONS, REVISED
RFG	ROOFING
RFL	REFLECT, REFLECTED, REFLECTIVE
RH	RIGHT HAND
RL	RAIN LEADER
RM	ROOM
RO	ROUGH OPENING
RSHT	RESILIENT SHEET
RT	RUBBER TILE / RUBBER TREAD
RTU	ROOF TOP UNIT
S	SOUTH
S/S	STAINLESS STEEL, SERVICE SINK
SAB	SOUND ATTENUATION BLANKET
SAN	SANITARY SEWER
SAPC	SUSPENDED ACOUSTIC PANEL CEILING
SC	SOLID CORE, SEALED CONCRETE
SCHED	SCHEDULE
SCW	SOLID CORE WOOD
SD	SOAP DISPENSER, STORM DRAIN
SEC	SECTION
SF	SQUARE FEET
SFGL	SAFETY GLASS
SHLVG	SHELVING
SHM	SECURITY HOLLOW METAL
SHT	SHEET
SHTH	SHEATHING
SIM	SIMILAR
SLR	SEALER
SN	STAGE NOSE
SND	SANITARY NAPKIN DISPOSER
SOF	SPRAY-ON FIREPROOFING
SPEC	SPECIFICATION, SPECIFICATIONS
SPK	SPEAKER
SQ	SQUARE
SS	SOLID SURFACE
ST	STAIN, STONE
STD	STANDARD
STFT	STOREFRONT
STL	STEEL
STOR	STORAGE
STRUC	STRUCTURAL
SUB	SUBSTITUTE
SUSP	SUSPENDED
SYM	SYMMETRICAL, SYMMETRY
SYN	SYNTHETIC
SYS	SYSTEM
T	TREAD
T&B	TOP & BOTTOM
TB	TACK BOARD
TEL	TELEPHONE
TEMP	TEMPORARY, TEMPERED
TERR	TERRAZZO
TG	TONGUE & GROVE
THK	THICK, THICKNESS
THRES	THRESHOLD
THRU	THROUGH
TO	TOP OF
TOC	TOP OF CURB
TOS	TOP OF STEEL
TOW	TOP OF WALL
TP	TOILET PARTITION
TPT	TEXTURED PAINT
TRTD	TREATED
TSC	TEACHERS STORAGE CABINET
TTD	TOILET TISSUE DISPENSER
TV	TELEVISION
TW	TEACHERS WARDROBE
TYP	TYPICAL
UC	UNDERCUT
UG	UNDER GROUND
UH	UNIT HEATER
UNF	UNFINISHED
UON	UNLESS OTHERWISE NOTED
V	VOLT, VALLEY
VAC	VACUUM
VAR	VARNISH
VB	VENTED BASE
VCT	VINYL COMPOSITION TILE
VEN	VENEER
VERT	VERTICAL
VEST	VESTIBULE
VR	VAPOR RETARDER
VT	VINYL TILE
VTR	VENT THRU ROOF
VWC	VINYL WALL COVERING
W	WEST, WIDE, WIDTH
W/	WITH
W/O	WITHOUT
WAIN	WAINSCOT
WB	WOOD BASE
WC	WATER CLOSET
WD	WOOD / WOOD FLOORING
WDB	WOOD BASE
WDW	WINDOW
WGL	WIRE GLASS
WH	WATER HEATER
WI	WROUGHT IRON
WMS	WIRE MANAGEMENT SLOT
WP	WATERPROOFING
WPT	WORKING POINT
WR	WASTE RECEPTACLE
WT	WEIGHT
WWF	WELDED WIRE FABRIC
WWM	WELDED WIRE MESH

ARCHITECTURAL MATERIAL LEGEND

- CONTINUOUS WOOD BLOCKING
- CONCRETE MASONRY UNIT
- CAST-IN-PLACE CONCRETE
- STEEL
- EARTH / COMPACT FILL
- BATT INSULATION
- POROUS FILL / GRAVEL
- RIGID INSULATION
- GYPSUM BOARD
- RESILIENT FLOORING / PLASTIC LAMINATE
- ALUMINUM
- FINISHED WOOD
- WOOD BLOCKING
- BRICK
- GLASS
- ACOUSTICAL TILE
- PLYWOOD
- CERAMIC TILE - LARGE SCALE
- SAND / MORTAR / PLASTER
- GRAVEL

ARCHITECTURAL GRAPHIC SYMBOLS

A101A — DOOR TAG - BUILDING DIV/DOOR NUMBER LOCATION SUFFIX (IF REQ'D)

ROOM A101 — ROOM NAME, BLDG DIV / CONST NO.

MATCH LINE — SEE A101

LX — LOUVER TYPE

X — TOILET ACCESSORIES

X — KEY NOTE

XX CW — CURTAIN WALL TYPES (REF A600 SERIES DRAWINGS); CURTAIN WALL

MSR8 — PARTITION TYPE (SEE PARTITION LEGEND)

X / AXXX — EXTERIOR / INTERIOR / INTERIOR CASEWORK ELEVATION IDENTIFICATION NUMBER; SHEET NUMBER WHERE ELEVATION IS LOCATED

XX HM — HOLLOW METAL FRAME TYPES (REF A600 SERIES DRAWINGS); HOLLOW METAL FRAME

ELEVATION REFERENCE, WORKING POINT

XX / XX — SIGNAGE TYPE; SIGNAGE NO. ARCH NO.

XX SF — WINDOW FRAME TYPES (REF A600 SERIES DRAWINGS); STOREFRONT

X — CONTROL JOINT

BUILDING SECTION REFERENCE
1 A101 — SECTION NUMBER; DRAWING NUMBER WHERE SECTION IS DRAWN

MAIN DRAWING TITLE
TITLE — DRAWING TITLE
SCALE: 1/8" = 1'-0" — DRAWING SCALE

SECTION REFERENCE
1 A101 — SECTION NUMBER; DRAWING NUMBER WHERE SECTION IS DRAWN

DRAWING TITLE WITH REFERENCE SYMBOL
1 A101 — DRAWING NUMBER DESIGNATION
TITLE — DRAWING TITLE
SCALE: 1/8" = 1'-0" — DRAWING SCALE
R101 — DRAWING REFERENCE NUMBER; DRAWING SHEET NUMBER

DETAIL / ENLARGED PLAN REFERENCE
1 A101 — DETAIL / ENLARGED PLAN NUMBER; DRAWING NUMBER WHERE DETAIL / ENLARGED PLAN IS DRAWN

BID ALTERNATES

BID ALTERNATE NO. 1 - DELETE GIRLS GROUP TOILET B219, BOYS GROUP TOILET B211, STORAGE B221 AND CUSTODIAL B220. PROVIDE 4TH/ 5TH GRADE CLASSROOM B221. REFERENCE SHEET A-006 FOR ADDITIONAL REQUIREMENTS.

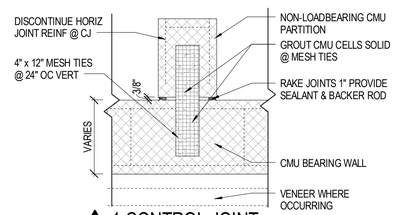

1 CONTROL JOINT
SCALE: 1 1/2" = 1'-0"
TYPICAL INTERSECTION OF LOADBEARING AND NON-LOADBEARING CMU WALLS

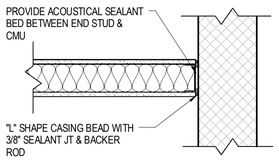

TYP INTERSECTION OF CMU
2 WALL & MTL STUD PARTITION
SCALE: 1 1/2" = 1'-0"

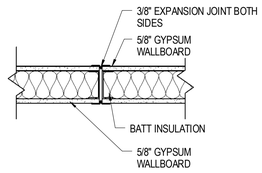

3 CONTROL JOINT
SCALE: 1 1/2" = 1'-0"

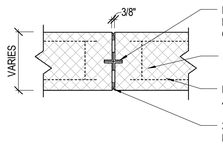

4 CONTROL JOINT
SCALE: 1 1/2" = 1'-0"
TYPICAL CONTROL JOINT DETAIL, LOAD BEARING AND NON-LOAD BEARING WALLS

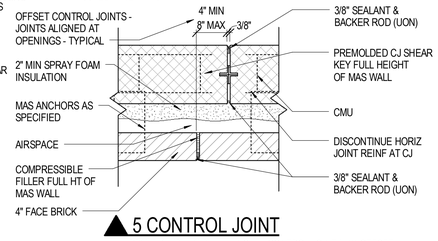

5 CONTROL JOINT
SCALE: 1 1/2" = 1'-0"
NOTE: CONTROL JOINT MAY OFFSET TO NEAREST MASONRY VERTICAL JOINT

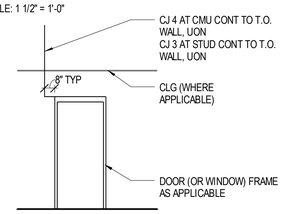

6 CONTROL JOINT
SCALE: 1 1/2" = 1'-0"
TYPICAL INTERIOR CONTROL JOINT LOCATED ADJACENT TO WINDOW OR DOOR OPENING

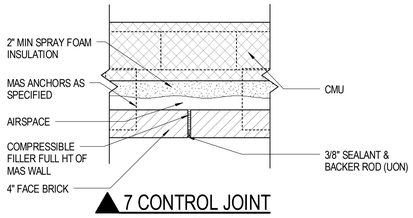

7 CONTROL JOINT
SCALE: 1 1/2" = 1'-0"
NOTE: CONTROL JOINT MAY OFFSET TO NEAREST MASONRY VERTICAL JOINT

CONTROL JOINT NOTES

1. REF 1/8" PLANS, 1/4" PLANS, BUILDING ELEVATIONS AND PLAN DETAILS FOR CJ LOCATIONS. CJ'S ARE INDICATED ON 1/8" PLANS THUS: ▼ 1 THE NUMBER BESIDE THE SYMBOL IDENTIFIES THE CONTROL JOINT DETAIL NUMBER.
2. WHERE CJ'S OCCUR IN FIRE WALLS, PROVIDE FIRE RATED SEALANT SYSTEMS TO PROVIDE RATING EQUAL TO THE WALL RATING.
3. DETAILS INDICATE GENERAL CONDITIONS. SPECIFIC CONDITIONS MAY VARY SLIGHTLY. VERIFY ACTUAL FIELD CONDITIONS. FIELD ADJUSTED DETAILS MAY BE REQUIRED. NOTIFY ARCHITECT IF THERE ARE CONFLICTS PRIOR TO INSTALLATION.
4. TERMINATE HORIZONTAL MASONRY REINFORCING AT CJ'S.
5. SEALANT COLORS SHALL BE SELECTED BY ARCHITECT WHERE EXPOSED TO VIEW.
6. CONTROL JOINT WIDTHS ARE 3/8" UON. EXTEND CJ'S CONTINUOUS DOWN TO T.O. FTGS.
7. PLANS AND ELEVATIONS MAY NOT SHOW ALL REQ'D CONTROL JOINTS. FOLLOW MASONRY SPEC'S AND "TYPICAL " NOTATIONS FOR REQ'D CJ'S NOT SPECIFICALLY INDICATED ON PLANS. FOR EXAMPLE, CJ'2 IS REQ'D AT ALL SUCH INTERSECTIONS

Received by SBBCC 3.2.2015

S.B. Ballard Construction Company
RRMM ARCHITECTS
WALLER TODD & SADLER ARCHITECTS
The Livas Group Architects, P.C.

MARK	DATE	BY	DESCRIPTION
REVISIONS			

DATE	03-03-2015
PROJECT	10105.22
DESIGNED	LRS
DRAWN	HJH
CHECKED	DRJ

COMMONWEALTH OF VIRGINIA
DUANE M. HARVER
Lic. No. 6310
03/03/15
ARCHITECT

SBBCC PROJECT NUMBER: NPS-2014-317
VIRGINIA DEPARTMENT OF EDUCATION: 118-46-00-100

PROJECT
CITY OF NORFOLK AND NORFOLK PUBLIC SCHOOLS
BROAD CREEK IB ELEMENTARY SCHOOL
NORFOLK, VIRGINIA

DRAWING
DATA SHEET

SHEET
A-001

C:\Users\rgossett\Documents\10105-22 Broad Creek Elem School - Central_rgossett.rvt
3/3/2015 5:14:30 PM

M1

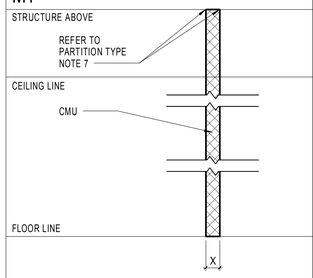

ACTUAL DIMENSION 'X'	3 5/8"
STUD SIZE	-
CMU SIZE	4"

M2

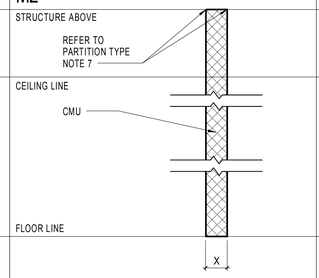

ACTUAL DIMENSION 'X'	5 5/8"
STUD SIZE	-
CMU SIZE	6"

M2R

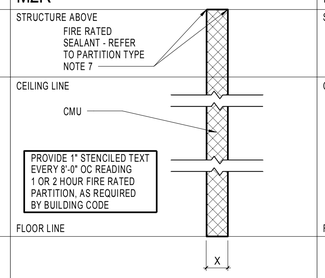

ACTUAL DIMENSION 'X'	5 5/8"
STUD SIZE	-
CMU SIZE	6"

M3

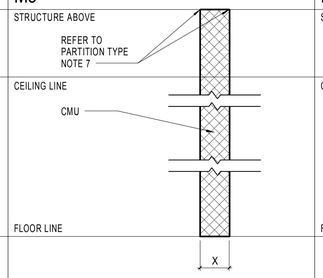

ACTUAL DIMENSION 'X'	7 5/8"
STUD SIZE	-
CMU SIZE	8"

M3B

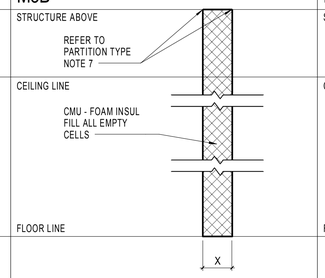

SOUND RATING	STC 54
ACTUAL DIMENSION 'X'	7 5/8"
STUD SIZE	-
CMU SIZE	8"

M3R

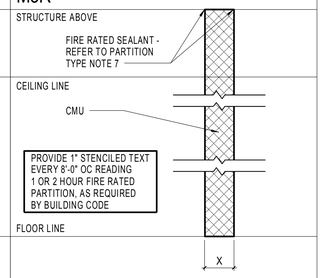

ACTUAL DIMENSION 'X'	7 5/8"
STUD SIZE	-
CMU SIZE	8"

M5

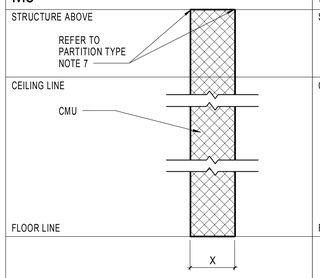

ACTUAL DIMENSION 'X'	11 5/8"
STUD SIZE	-
CMU SIZE	12"

M5R

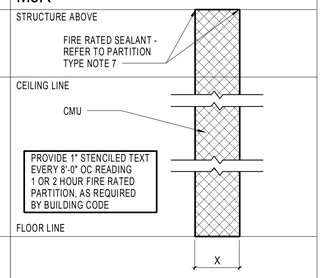

ACTUAL DIMENSION 'X'	11 5/8"
STUD SIZE	-
CMU SIZE	12"

S3

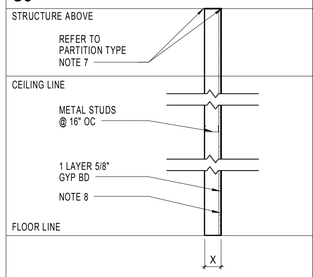

ACTUAL DIMENSION 'X'	4 1/4"
STUD SIZE	3 5/8"
CMU SIZE	-

S3B

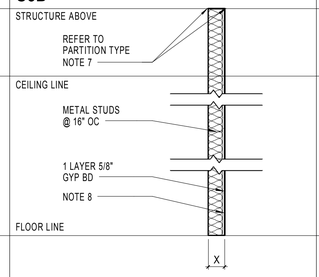

ACTUAL DIMENSION 'X'	4 1/4"
STUD SIZE	3 5/8"
CMU SIZE	-

S4

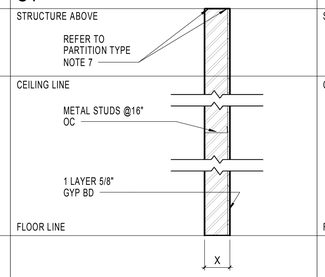

ACTUAL DIMENSION 'X'	6 5/8"
STUD SIZE	6"
CMU SIZE	-

S4B

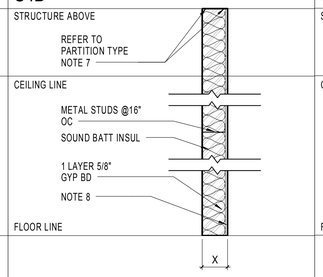

ACTUAL DIMENSION 'X'	6 5/8"
STUD SIZE	6"
CMU SIZE	-

S6

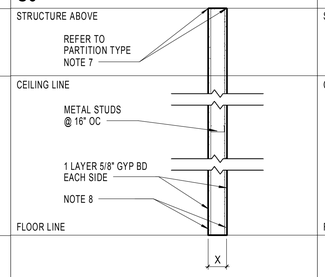

ACTUAL DIMENSION 'X'	4 7/8"
STUD SIZE	3 5/8"
CMU SIZE	-

S6B

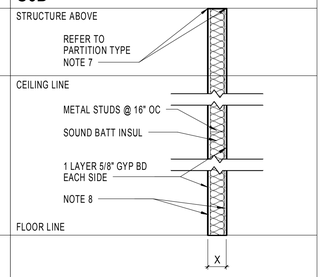

ACTUAL DIMENSION 'X'	4 7/8"
STUD SIZE	3 5/8"
CMU SIZE	-

S6BR

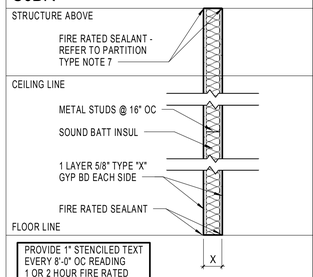

PROVIDE 1" STENCILED TEXT EVERY 8'-0" OC READING 1 OR 2 HOUR FIRE RATED PARTITION, AS REQUIRED BY BUILDING CODE

ACTUAL DIMENSION 'X'	4 7/8"
STUD SIZE	3 5/8"
CMU SIZE	-

S7

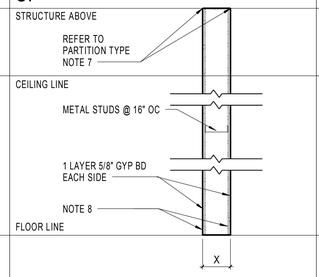

ACTUAL DIMENSION 'X'	7 1/4"
STUD SIZE	6"
CMU SIZE	-

S7B

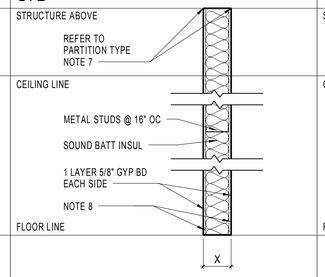

ACTUAL DIMENSION 'X'	7 1/4"
STUD SIZE	6"
CMU SIZE	-

S16BR

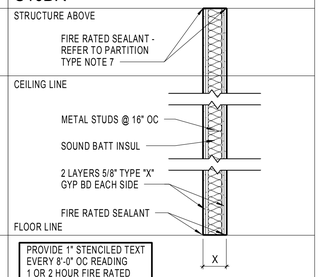

PROVIDE 1" STENCILED TEXT EVERY 8'-0" OC READING 1 OR 2 HOUR FIRE RATED PARTITION, AS REQUIRED BY BUILDING CODE

ACTUAL DIMENSION 'X'	6 1/8"
STUD SIZE	3 5/8"
CMU SIZE	-

PARTITION TYPE NOTES

1. REFER TO LIFE SAFETY PLANS FOR LOCATION AND RATING OF FIRE RATED PARTITIONS AND PARTITIONS THAT RESIST THE PASSAGE OF SMOKE.
2. PARTITION TYPES DO NOT INCLUDE ALL APPLIED FINISHES. REFER TO FINISH SCHEDULE.
3. SEAL TOP OF WALL AT STRUCTURAL (ROOF/FLOOR) DECK, AT PERIMETER, AT WALL INTERSECTIONS, AT FLOOR, AND AT ALL PENETRATIONS. USE FIRE RATED SEALANT AS REQUIRED TO SEAL IN ACCORDANCE WITH JOINT SYSTEM UL HWD0039 AT CMU AND UL HWD0034 AT GYP BD PARTITIONS, WHERE PARTITIONS ARE INDICATED TO BE FIRE RATED.
4. USE FIRE RATED GYPSUM BOARD AT FIRE RATED GYPSUM BOARD PARTITIONS.
5. ALL CMU WALLS SHALL BE REINFORCED WITH HORIZONTAL MASONRY REINFORCING @ 16" OC VERTICALLY UNLESS OTHERWISE NOTED.
6. MASONRY FIREWALLS SHALL BE CONSTRUCTED OF MATERIALS CERTIFIED TO ACHIEVE THE FIRE RATING REQUIRED FOR THE THICKNESS INDICATED.
7. PARTITION TERMINATION LOCATION & CONDITIONS MAY VERY. REFER TO REFLECTED CEILING PLANS FOR PARTITION TERMINATION LEGEND & TYPICAL TERMINATION DETAILS.
8. 1 LAYER 5/8" CEMENTITIOUS BACKER BOARD AT CERAMIC TILE LOCATIONS AS OCCURRING. REFERENCE FINISH SCHEDULE AND FLOOR PLANS.
9. ALL EXPOSED CMU CORNERS IN THE BUILDING INCLUDING THOSE AT DOORS AND WINDOW JAMBS SHALL RECEIVE 1" RADIUS BULLNOSED CORNERS, EXCEPT AT WALLS SCHEDULED TO RECEIVE TILE APPLIED TO CMU.

TESTING LAB CHART

PARTITIONS		
PARTITION TYPE	1 HR RATING	2 HR RATING
M2R	UL #U906	
M3R	UL #U906	UL #U906
M4R	UL #U906	UL #U906
M5R	UL #U906	UL #U906
S6BR	UL #U409	
S16BR		UL #U411
CEILINGS		
CEILING TYPE	1 HR RATING	2 HR RATING
GYP SHAFT WALL	AER-09038	AER-09038
ROOF/CEILING	UL #P723	UL #P723
EXTERIOR BEARING WALLS		
WALL TYPE	1 HR RATING	2 HR RATING
EXTERIOR WALL	UL #U902	

Received by SBBCC 3.2.2015

S.B. Ballard Construction Company

RRMM ARCHITECTS

WALLER TODD & SADLER ARCHITECTS

The Livas Group Architects, P.C.

MARK	DATE	BY	DESCRIPTION
REVISIONS			

DATE	03-03-2015
PROJECT	10105.22
DESIGNED	LRS
DRAWN	HJH
CHECKED	DRJ

COMMONWEALTH OF VIRGINIA
C. DUANE M. HARVER
Lic. No. 6310
03/03/15
ARCHITECT

SBBCC PROJECT NUMBER: NPS-2014-317
VIRGINIA DEPARTMENT OF EDUCATION: 118-46-00-100

PROJECT
CITY OF NORFOLK AND NORFOLK PUBLIC SCHOOLS
BROAD CREEK IB ELEMENTARY SCHOOL
NORFOLK, VIRGINIA

DRAWING
PARTITION TYPES

SHEET
A-002

C:\Users\rgossett\Documents\10105.22 Broad Creek Elem School - Central_rgossett.rvt
3/3/2015 5:14:32 PM

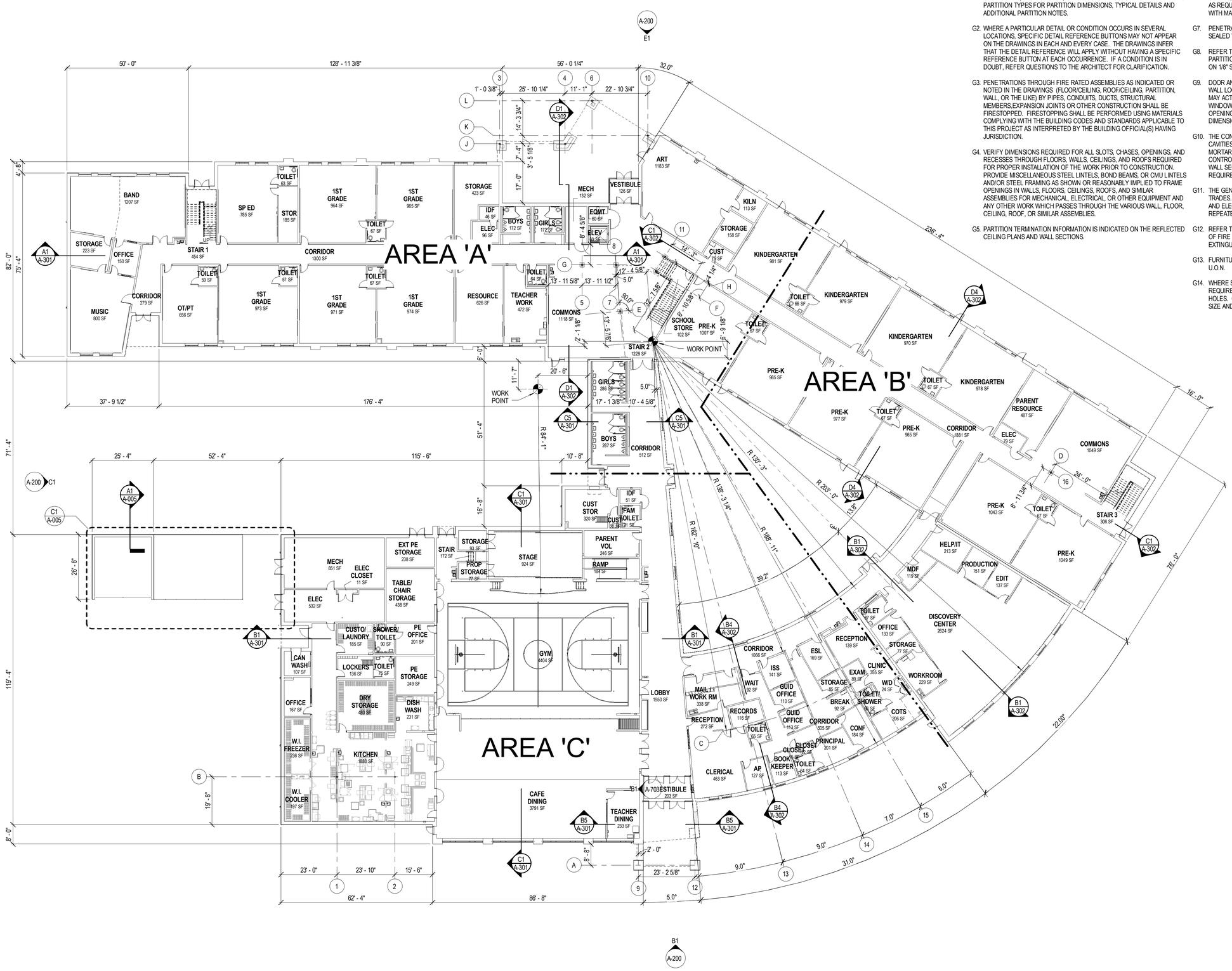

OVERALL FIRST FLOOR PLAN

SCALE: 1/16" = 1'-0"

PLAN NORTH

GENERAL WORK NOTES

(APPLIES TO ALL SHEETS)

G1. UNLESS OTHERWISE NOTED, ALL FLOOR PLAN DIMENSIONS ARE TO FACE OF MASONRY, FACE OF STUD, OR STRUCTURAL COLUMN GRID. REFER TO PARTITION TYPES FOR PARTITION DIMENSIONS, TYPICAL DETAILS AND ADDITIONAL PARTITION NOTES.

G2. WHERE A PARTICULAR DETAIL OR CONDITION OCCURS IN SEVERAL LOCATIONS, SPECIFIC DETAIL REFERENCE BUTTONS MAY NOT APPEAR ON THE DRAWINGS IN EACH AND EVERY CASE. THE DRAWINGS INFER THAT THE DETAIL REFERENCE WILL APPLY WITHOUT HAVING A SPECIFIC REFERENCE BUTTON AT EACH OCCURRENCE. IF A CONDITION IS IN DOUBT, REFER QUESTIONS TO THE ARCHITECT FOR CLARIFICATION.

G3. PENETRATIONS THROUGH FIRE RATED ASSEMBLIES AS INDICATED OR NOTED IN THE DRAWINGS (FLOOR/CEILING, ROOF/CEILING, PARTITION, WALL, OR THE LIKE) BY PIPES, CONDUITS, DUCTS, STRUCTURAL MEMBERS,EXPANSION JOINTS OR OTHER CONSTRUCTION SHALL BE FIRESTOPPED. FIRESTOPPING SHALL BE PERFORMED USING MATERIALS COMPLYING WITH THE BUILDING CODES AND STANDARDS APPLICABLE TO THIS PROJECT AS INTERPRETED BY THE BUILDING OFFICIAL(S) HAVING JURISDICTION.

G4. VERIFY DIMENSIONS REQUIRED FOR ALL SLOTS, CHASES, OPENINGS, AND RECESSES THROUGH FLOORS, WALLS, CEILINGS, AND ROOFS REQUIRED FOR PROPER INSTALLATION OF THE WORK PRIOR TO CONSTRUCTION. PROVIDE MISCELLANEOUS STEEL LINTELS, BOND BEAMS, OR CMU LINTELS AND/OR STEEL FRAMING AS SHOWN OR REASONABLY IMPLIED TO FRAME OPENINGS IN WALLS, FLOORS, CEILINGS, ROOFS, AND SIMILAR ASSEMBLIES FOR MECHANICAL, ELECTRICAL, OR OTHER EQUIPMENT AND ANY OTHER WORK WHICH PASSES THROUGH THE VARIOUS WALL, FLOOR, CEILING, ROOF, OR SIMILAR ASSEMBLIES.

G5. PARTITION TERMINATION INFORMATION IS INDICATED ON THE REFLECTED CEILING PLANS AND WALL SECTIONS.

G6. PROVIDE SOLID WOOD BLOCKING WITHIN STUD AND FURRING SPACES, BEHIND WALL MOUNTED ACCESSORIES, EQUIPMENT, ETC. AS REQUIRED FOR SECURE ANCHORAGE. ALL BLOCKING IN CONTACT WITH MASONRY SHALL BE PRESERVATIVE PRESSURE TREATED UON.

G7. PENETRATIONS THROUGH SOUND RATED CONSTRUCTION SHALL BE SEALED W/ ACOUSTICAL SEALANT.

G8. REFER TO ENLARGED PLANS FOR ADDITIONAL DIMENSIONS, PARTITION TYPES AND OTHER INFORMATION THAT MAY NOT APPEAR ON 1/8" SCALE PLANS.

G9. DOOR AND WINDOW OPENING DIMENSIONS ARE NOMINAL IN ALL WALL LOCATIONS. FOR EXAMPLE, A 4'-0" WIDE MASONRY OPENING MAY ACTUALLY BE 4'-0 3/8" WIDE. EXCESSIVE JOINTS (OVER 1/2") AT WINDOW JAMBS AND HEADS WILL NOT BE ACCEPTABLE. ALL OPENINGS MUST BE FIELD VERIFIED TO COORDINATE FRAME DIMENSIONS WITH ACTUAL OPENING.

G10. THE CONTRACTOR SHALL MAINTAIN AND KEEP ALL MASONRY WALL CAVITIES, MASONRY EXPANSION AND CONTROL JOINTS FREE OF MORTAR AND MORTAR DROPPINGS AT ALL TIMES. REFER TO CONTROL JOINT DETAILS FOR ADDITIONAL INFORMATION. REFER TO WALL SECTIONS AND DETAILS FOR ADDITIONAL EXPANSION JOINT REQUIREMENTS.

G11. THE GENERAL CONTRACTOR SHALL COORDINATE THE WORK OF ALL TRADES. EXAMINE ALL CIVIL, STRUCTURAL, PLUMBING, MECHANICAL, AND ELECTRICAL DOCUMENTS. MUCH OF THE INFORMATION IS NOT REPEATED OR SHOWN IN THE ARCHITECTURAL DOCUMENTS.

G12. REFER TO LIFE SAFETY PLAN SHEETS LS01 & LS02 FOR LOCATIONS OF FIRE EXTINGUISHER CABINETS AND BRACKET MOUNTED FIRE EXTINGUISHERS.

G13. FURNITURE AND EQUIPMENT SHOWN DASHED IS NOT IN CONTRACT, U.O.N.

G14. WHERE STRUCTURAL MEMBERS ARE EXPOSED TO VIEW, GC MAY BE REQUIRED TO ROUTE CONDUIT AND PIPE THROUGH FIELD-DRILLED HOLES. COORDINATE ROUTES AND OBTAIN PRIOR APPROVAL FOR SIZE AND LOCATION OF HOLES FROM ARCHITECT.

S.B. Ballard Construction Company

RRMM ARCHITECTS

WALLER TODD & SADLER ARCHITECTS

The Livas Group Architects, P.C.

MARK	DATE	BY	DESCRIPTION
REVISIONS			

DATE	03-03-2015
PROJECT	10105.22
DESIGNED	LRS
DRAWN	HJH
CHECKED	DRJ

COMMONWEALTH OF VIRGINIA
C. DUANE M. HARVER
Lic. No. 6310
03/03/15
ARCHITECT

PROJECT
CITY OF NORFOLK AND NORFOLK PUBLIC SCHOOLS
BROAD CREEK IB ELEMENTARY SCHOOL
NORFOLK, VIRGINIA

SBBCC PROJECT NUMBER: NPS-2014-317
VIRGINIA DEPARTMENT OF EDUCATION: 116-48-00-100

DRAWING
OVERALL FIRST FLOOR PLAN

SHEET
A-003

Received by SBBCC 3.2.2015

C:\Users\rgossett\Documents\10105-22 Broad Creek Elem School - Central_cgossett.rvt

3/3/2015 5:14:41 PM

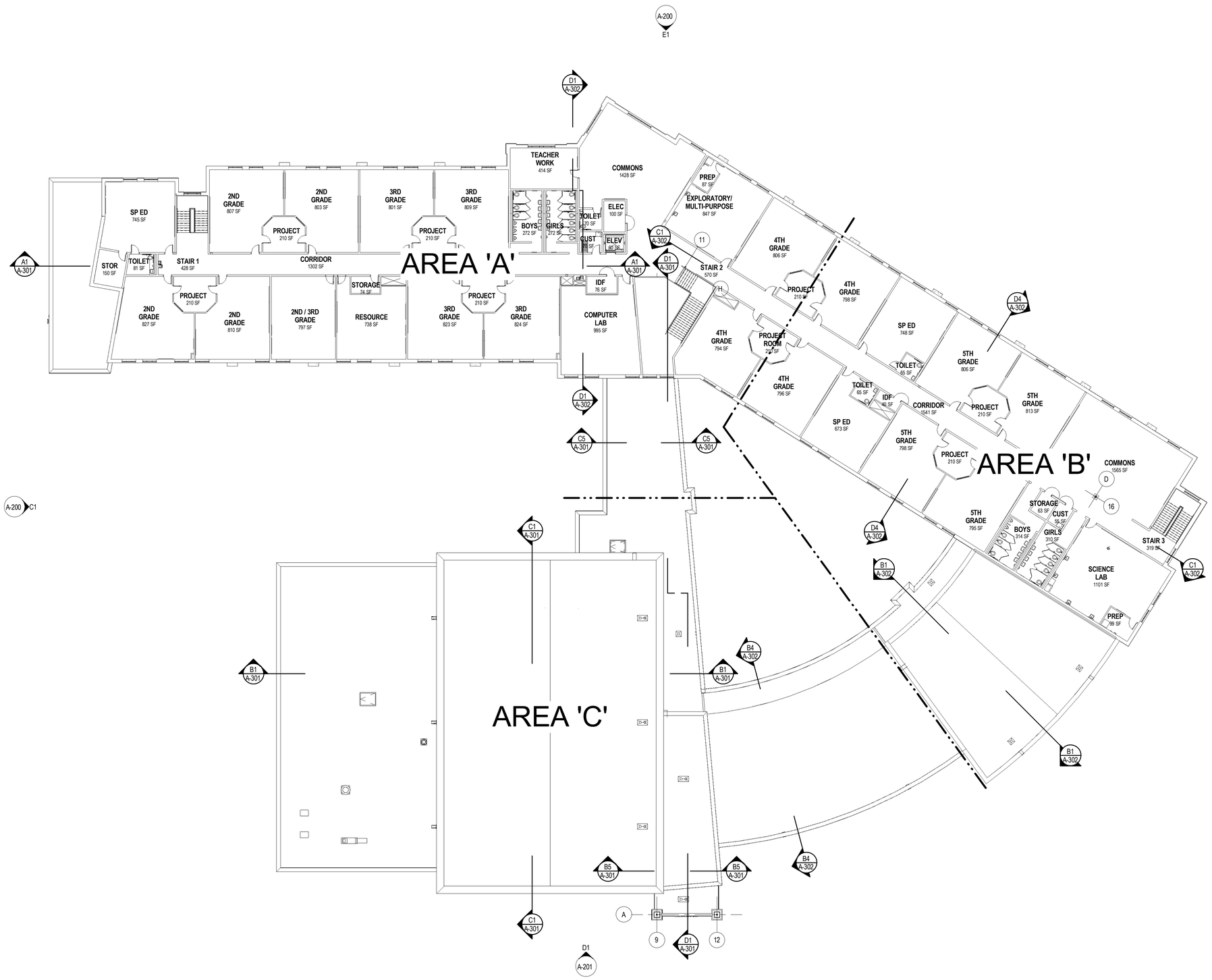

OVERALL SECOND FLOOR PLAN

SCALE: 1/16" = 1'-0"

PLAN NORTH

Received by SBBCC 3.2.2015

S.B. Ballard Construction Company

RRMM ARCHITECTS

WALLER TODD & SADLER ARCHITECTS

The Livas Group Architects, P.C.

MARK	DATE	DESCRIPTION	BY
REVISIONS			

DATE	03-03-2015
PROJECT	10105.22
DESIGNED	LRS
DRAWN	HJH
CHECKED	DRJ

COMMONWEALTH OF VIRGINIA
C. DUANE M. HARVER
Lic. No. 6310
03/03/15
ARCHITECT

PROJECT: CITY OF NORFOLK AND NORFOLK PUBLIC SCHOOLS
BROAD CREEK IB ELEMENTARY SCHOOL
NORFOLK, VIRGINIA

SBBCC PROJECT NUMBER: NPS-2014-317
VIRGINIA DEPARTMENT OF EDUCATION: 118-48-00-100

DRAWING: OVERALL SECOND FLOOR PLAN

SHEET

A-004

C:\Users\rgosset\Documents\10105-22 Broad Creek Elem School - Central_rgosset.rvt

3/3/2015 5:14:49 PM

NOT IN CONTRACT

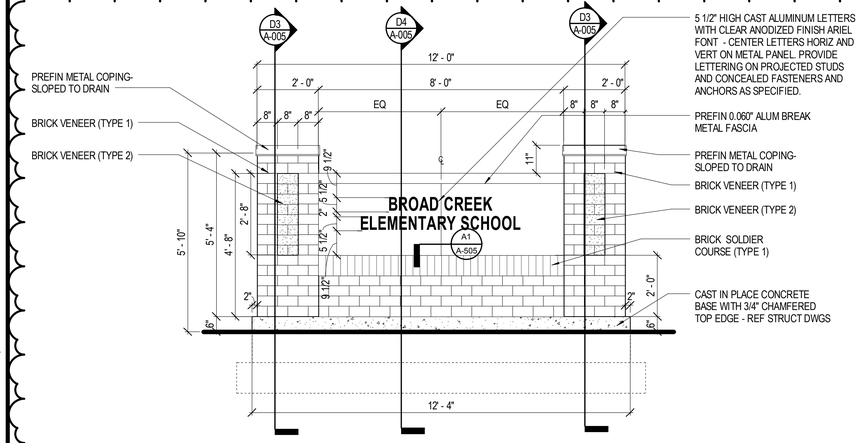

D1 A-005 BUILDING SITE SIGN - N.I.C.
SCALE: 1/2" = 1'-0"

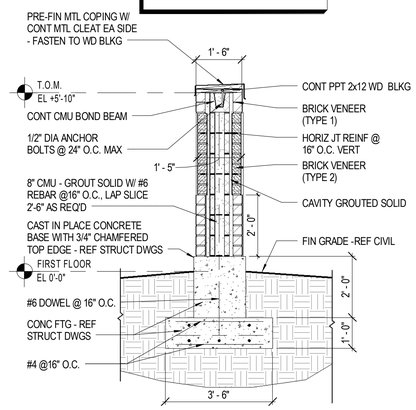

D3 A-005 BUILDING SITE SIGN SECTION 1
SCALE: 1/2" = 1'-0"

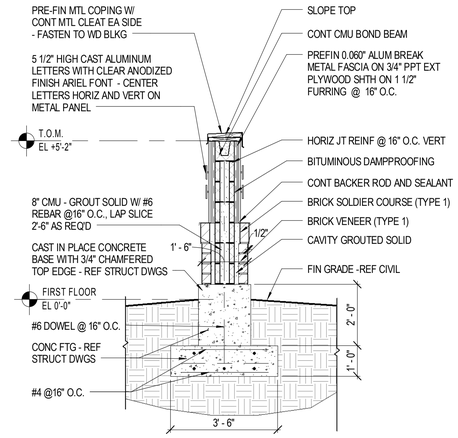

D4 A-005 BUILDING SITE SIGN SECTION 2
SCALE: 1/2" = 1'-0"

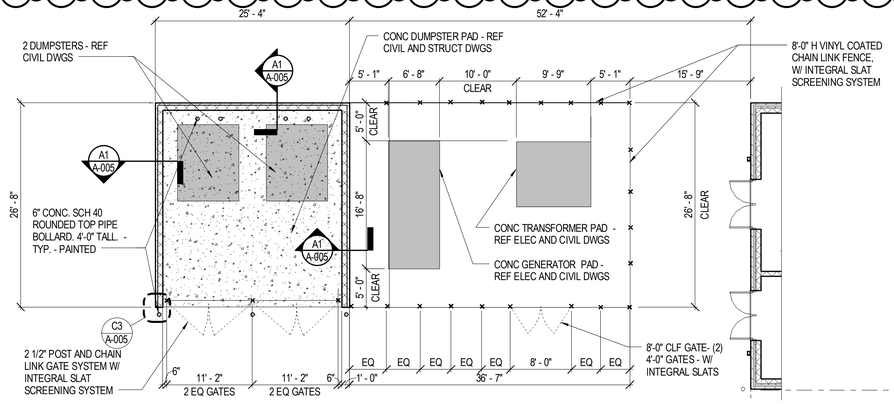

C1 A-005 ENLARGED MECH SCREEN YARD
SCALE: 1/8" = 1'-0"

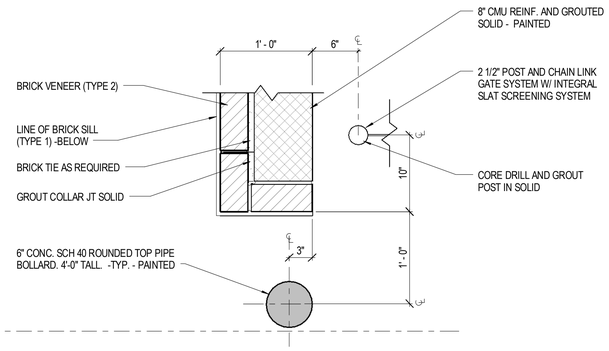

C3 A-005 SCREEN WALL DETAIL
SCALE: 1 1/2" = 1'-0"

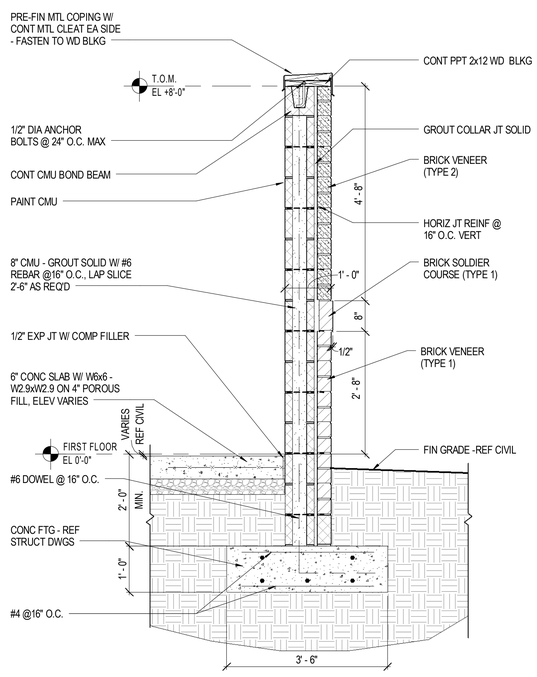

A1 A-005 SCREEN WALL
SCALE: 3/4" = 1'-0"

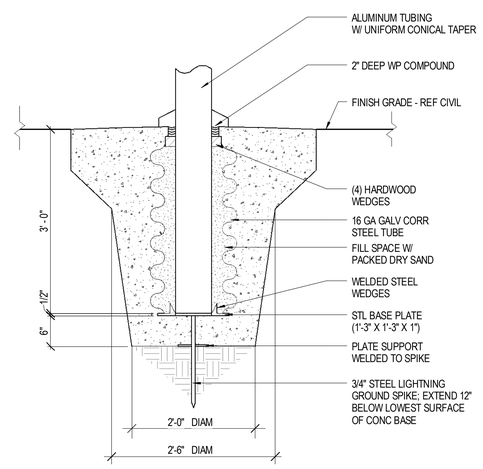

A3 A-005 FLAGPOLE BASE DETAIL
SCALE: 1" = 1'-0"
(REFERENCE CIVIL DRAWINGS FOR LOCATION)

Received by SBBCC 3.2.2015

S.B. Ballard Construction Company
RRMM ARCHITECTS
WALLER TODD & SADLER ARCHITECTS
The Livas Group Architects, P.C.

MARK	DATE	DESCRIPTION	BY
REVISIONS			

DATE	03-03-2015
PROJECT	10105.22
DESIGNED	LRS
DRAWN	HJH
CHECKED	DRJ

COMMONWEALTH OF VIRGINIA
C. DUANE M. HARVER
Lic. No. 6310
03/03/15
ARCHITECT

SBBCC PROJECT NUMBER: NPS-2014-317
VIRGINIA DEPARTMENT OF EDUCATION: 118-48-00-100

PROJECT
CITY OF NORFOLK AND NORFOLK PUBLIC SCHOOLS
BROAD CREEK IB ELEMENTARY SCHOOL
NORFOLK, VIRGINIA

DRAWING
SITE DETAILS

SHEET
A-005

C:\Users\rgossett\Documents\10105-22 Broad Creek Elem School - Central_rgossett.rvt
3/3/2015 5:14:53 PM

BID ALTERNATES

BID ALTERNATE NO. 1 - DELETE GIRLS GROUP TOILET B219, BOYS GROUP TOILET B211, STORAGE B221 AND CUSTODIAL B220. PROVIDE 4TH/ 5TH GRADE CLASSROOM B221. REFERENCE SHEET A-006 FOR ADDITIONAL REQUIREMENTS.

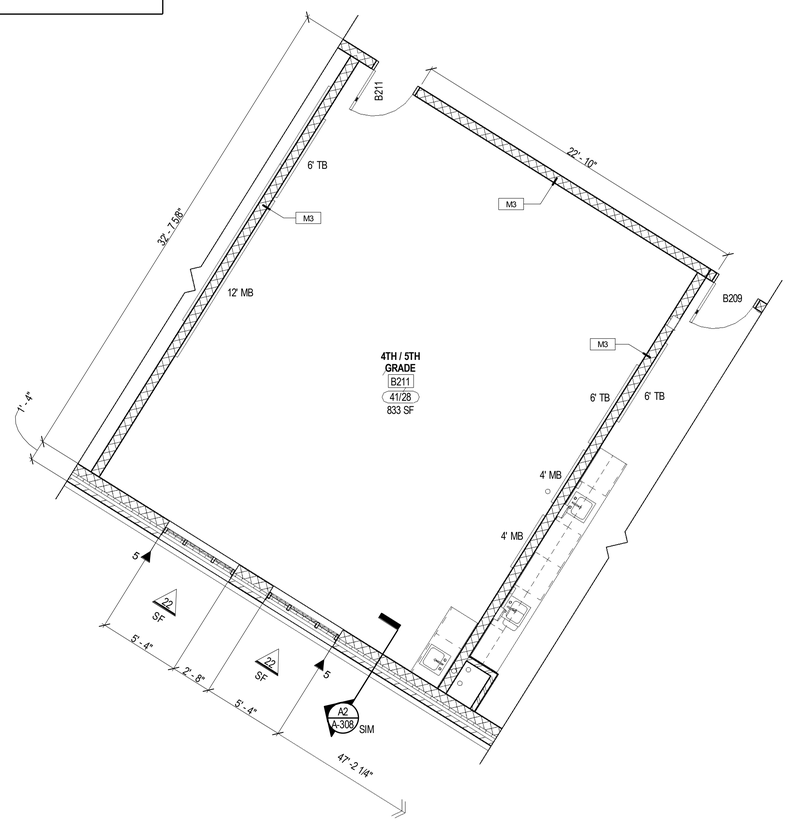

C1 A-006 PARTIAL SECOND FLOOR PLAN - AREA 'B2'

SCALE: 1/4" = 1'-0"

PLAN NORTH

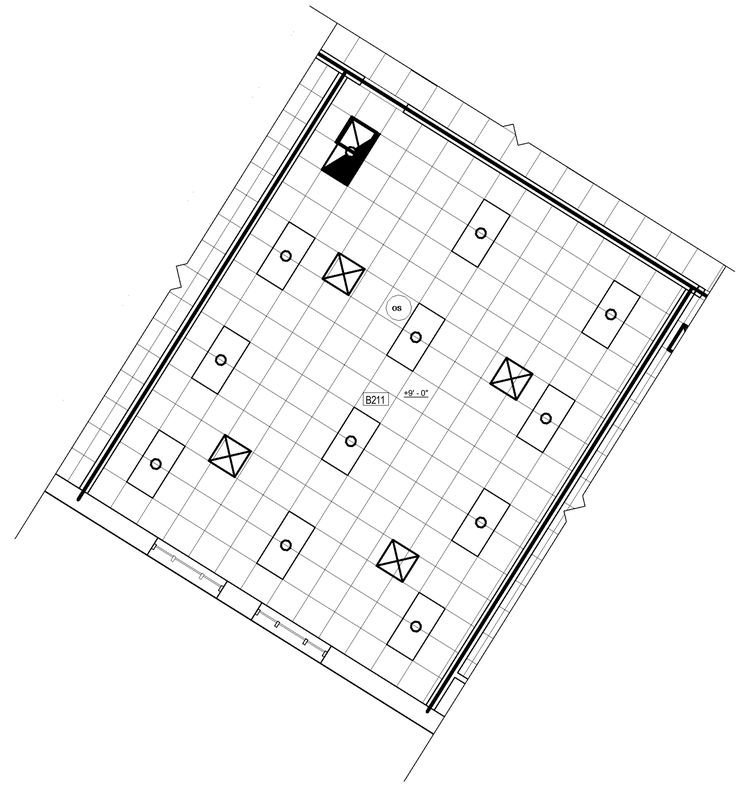

C4 A-006 PARTIAL SECOND FLOOR REFLECTED CEILING PLAN - AREA 'B2'

SCALE: 1/4" = 1'-0"

PLAN NORTH

LEGEND

XX' MB	MARKER BOARD (NUMBER INDICATES LENGTH IN FEET) - REF D2/A-802 FOR MOUNTING HEIGHTS
XX' TB	TACK BOARD (NUMBER INDICATES LENGTH IN FEET) - REF D2/A-802 FOR MOUNTING HEIGHTS
XX/XX	CODE OCCUPANCY / DESIGN OCCUPANCY
XXX SF	ROOM SQUARE FOOTAGE

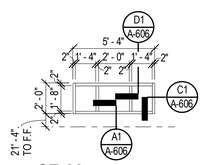

SF-22

SCALE: 1/4" = 1'-0"

B2 A-006 FRAME TYPE

REF CLG PLAN GENERAL NOTES

1. REFER TO FLOOR PLANS AND WALL SECTIONS FOR ADDITIONAL INFORMATION.
2. PROJECTORS, PROJECTOR SPEAKERS, WIRELESS ACCESS POINTS, AND INTERCOM SPEAKER LOCATIONS (NOT INDICATED) ARE TO BE DETERMINED. COORDINATE FINAL LOCATION WITH ACHITECT.
3. REFER TO ELECTRICAL LIGHTING AND AUXILIARY PLANS FOR WALL MOUNTED AND UNDERCABINET FIXTURES NOT INDICATED.
4. SPRINKLER HEADS (NOT INDICATED) SHALL BE CENTERED IN ACT OR WITHIN SPACE IN GYPSUM BOARD CEILING.
5. REFER TO MECH AND ELEC DRAWINGS FOR CEILING MOUNTED FIXTURE TYPES AND DIFFUSER LOCATIONS. NOTIFY ARCHITECT (PRIOR TO INSTALLATION) OF CONFLICTS WITH LOCATIONS INDICATED ON DRAWINGS. ADDITIONAL FIXTURES OR OTHER CEILING MATERIALS SHOWN ON ELECTRICAL OR MECHANICAL DRAWINGS BUT NOT SHOWN ON RCP'S ARE INCLUDED IN THE BASE BID.
6. SUPPLY AND DIFFUSER GRILLES ARE INDICATED DIAGRAMATICALLY IN RCP FOR LOCATION ONLY. REFER TO MECHANICAL DWG'S FOR ACTUAL SIZE AND TYPE TO BE PROVIDED.
7. 24"x24" ACOUSTICAL CEILING PANELS (ACT) SHALL BE USED BE THOUGHOUT. AT LOCATIONS WHERE AN ACOUSTICAL CEILING PANEL (ACT) WILL BE 5" OR LESS IN WIDTH, USE A 2X4 ATC OF THE SAME TYPE AND MANUFACTURER. FOR EXAMPLE: IN LIEU OF A 3"X24" ACT NEXT TO A 24"X24" ACT, THE PANEL SHALL BE 27"X24" AND EXTEND TO THE WALL OR SOFFIT.
8. REFER TO SHEET A-509 FOR TYPICAL PARTITION TERMINATIONS AT STRUCTURAL ELEMENTS WITH ALL EXTENSIONS OF FINISHES AND SOUND ATTENUATTION.
9. STRUCTURAL STEEL SHOWN FOR REFRENCE ONLY - REF STRUCTURAL DRAWINGS FOR EXACT SIZE AND LOCATIONS.
10. AT ALL SHOWER LOCATIONS, USE 5/8" MOISTURE RESISTANT GYP BD.

REFLECTED CEILING PLAN LEGEND

	INTERIOR GYPSUM BOARD OR EXTERIOR FINISH SYSTEM CEILING		LIGHT FIXTURES
	2'-0" x 2'-0" LAY-IN ACOUSTICAL TILE CEILING IN SUSPENDED GRID (ACT)		DOWN LIGHT
			EXTERIOR WALL MTD LIGHT
			SUPPLY DIFFUSER
NC	NO CEILING		RETURN AIR GRILLE
			UNIT HEATER
	EXIT LIGHT		EXHAUST FAN
X	TRACK LIGHT, NUMBER INDICATES LENGTH IN FEET		CEILING MOUNTED CCTV CAMERA
		+X'-X"_	CEILING HEIGHT
	PYRAMID ACOUSTICAL DIFFUSER	OS	OCCUPANCY SENSOR

PARTITION TERMINATION LEGEND

	PARTITION WHICH PENETRATES THE CLG & TERMINATES 4" ABOV FINISHED CLG. UON
	PARTITION WHICH CONTINUES THROUGH CLG TO BOTTOM OF ROOF DECK ABV (UNLESS NOTED OTHERWISE). AT GYP BD PARTITION PROVIDE BATT INSUL IN VOIDS IN DECK FOR SOUND TRANSMISSION BLOCKING OR CONT SEALANT. FOR ADDITIONAL INFORMATION REFER TO PARTITION TYPES AND PARTITION TYPE NOTES ON SHEET A-002 AND TYPICAL PARTITION TERMINATION DETAILS ON SHEET A-509.

DOOR SCHEDULE - BID ALTERNATE

DOOR						FRAME							
			SIZE					DETAILS					
NUMBER	TYPE	MAT'L	WIDTH	HEIGHT	THICKNESS	TYPE	MAT	HEAD	JAMB	SILL	RATING (MIN)	HDWR SET	NOTES
B211	C	WD	3'-0"	7' - 0"	1 3/4"	HM-2	HM	C3/A-604	B3/A-604	--		39.0	

NOTE: REFER TO A-601 FOR GENERAL DOOR AND HOLLOW METAL NOTES.
REFER TO A-602 FOR DOOR AND FRAME TYPES

FINISH SCHEDULE BID ALTERNATE

ROOM NUMBER	ROOM NAME	FLOOR	WALL BASE	WALLS				CEILING	NOTES
				N	S	E	W		
B211	4TH / 5TH GRADE	VCT1.2.3	RB1	PT1	PT1	PT1	PT4	ACT1	3

NOTE: REFER TO A-701 FOR SCHEDULE NOTES.
REFER TO A-702 FOR LEGEND
REFER TO A3/A-901 FOR TYPICAL CLASSROOM FLOOR PATTERN.

Received by SBBCC 3.2.2015

S.B. Ballard Construction Company

RRMM ARCHITECTS

WALLER TODD & SADLER ARCHITECTS

The Livas Group Architects, P.C.

MARK	DATE	BY	DESCRIPTION

REVISIONS

DATE	03-03-2015
PROJECT	10105.22
DESIGNED	LRS
DRAWN	HJH
CHECKED	DRJ

COMMONWEALTH OF VIRGINIA
DUANE M. HARVER
Lic. No. 6310
03/03/15
ARCHITECT

PROJECT
CITY OF NORFOLK AND NORFOLK PUBLIC SCHOOLS
BROAD CREEK IB ELEMENTARY SCHOOL
NORFOLK, VIRGINIA

SBBCC PROJECT NUMBER: NPS-2014-317
VIRGINIA DEPARTMENT OF EDUCATION: 118-48-00-100

DRAWING
BID ALTERNATE

SHEET
A-006

C:\Users\rgosset\Documents\10105-22 Broad Creek Elem School - Central_rgosset.rvt

3/3/2015 5:15:03 PM

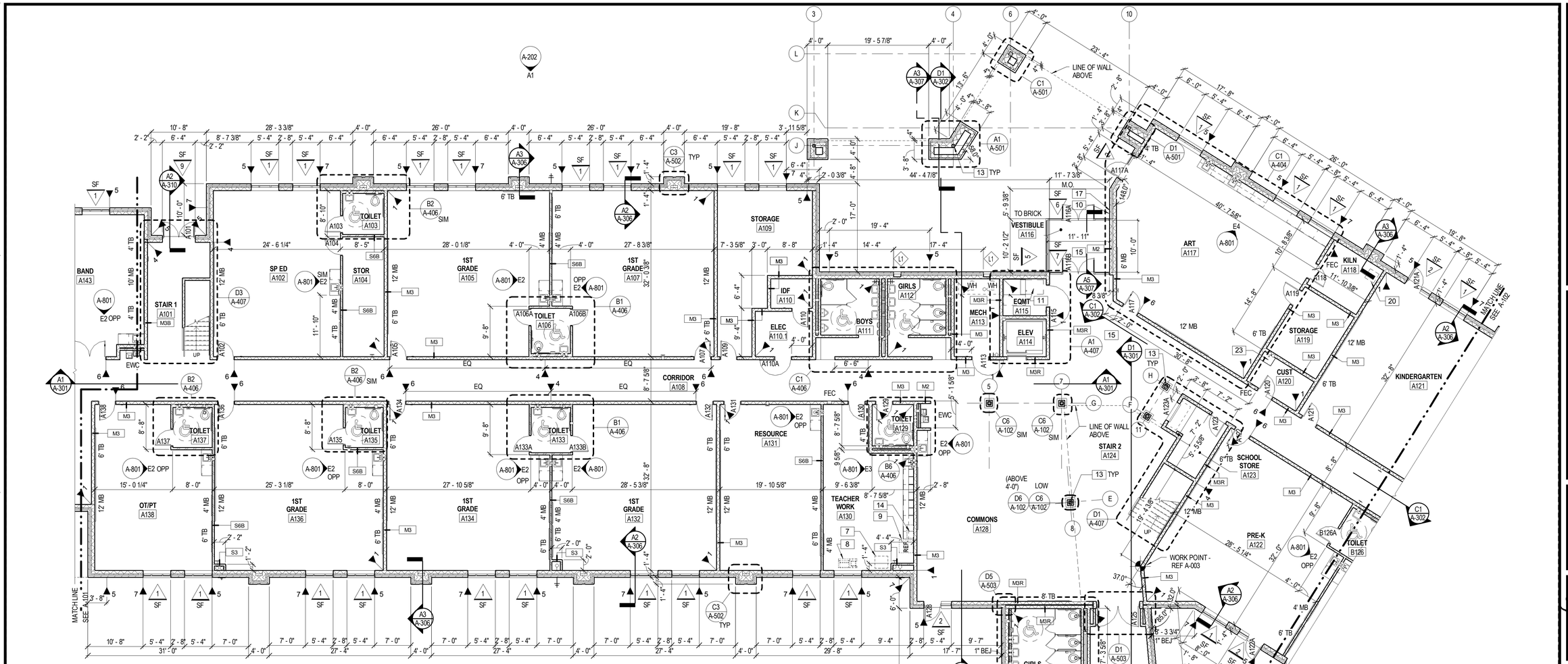

1 A-101 FIRST FLOOR PLAN - AREA 'A1'
SCALE: 1/8" = 1'-0"

PLAN NORTH

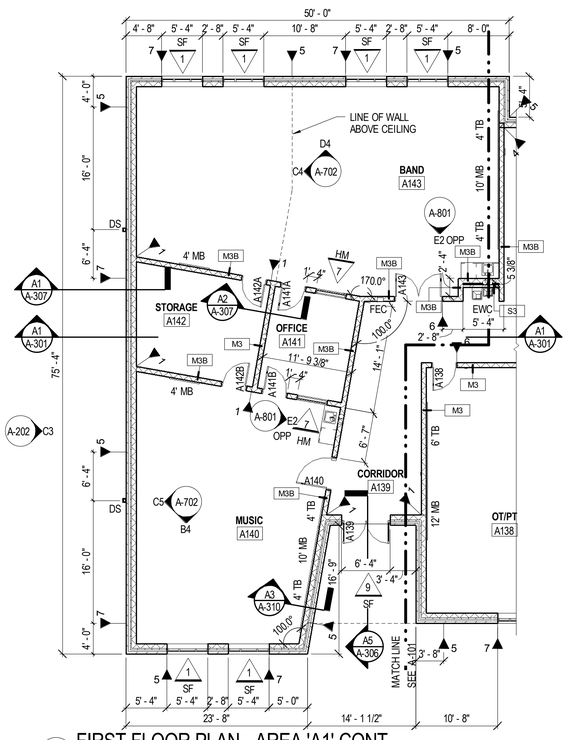

2 A-101 FIRST FLOOR PLAN - AREA 'A1' CONT
SCALE: 1/8" = 1'-0"

KEY NOTES

X

- 7 VENDING MACHINE, N.I.C.
- 8 COPIER, N.I.C.
- 9 REFRIGERATOR, N.I.C.
- 10 WALL MOUNTED ADA PUSH PAD
- 11 ELEVATOR EQUIPMENT PER MANUFACTURER'S STANDARD
- 13 STEEL COUMN - PAINT WHERE EXPOSED; REFER TO STRUCT DWGS. REFER TO OVERALL FIRST FLOOR PLAN FOR COLUMN GRID LOCATION.
- 14 MICROWAVE, N.I.C.
- 15 RECESSED ENTRANCE MAT - SIZE TO PERIMETER OF EXPOSED FLOOR SLAB WITHIN SPACE INDICATED.
- 17 WALL MOUNTED CARD READER, REF ELEC. DWGS
- 20 ELECTRIC KILN, N.I.C.; REFER TO MECH AND ELEC DWGS FOR ROUGH-INS.
- 23 MOP SINK - REF PLUMB DWGS
- 24 DISPLAY "LEARNING" WALL

GENERAL WORK NOTES

REFER TO SHEET A-003 FOR GENERAL WORK NOTES APPLYING TO ALL PLANS

LEGEND

XX' MB	MARKER BOARD (NUMBER INDICATES LENGTH IN FEET) - REF D2/A-802 FOR MOUNTING HEIGHTS
XX' TB	TACK BOARD (NUMBER INDICATES LENGTH IN FEET) - REF D2/A-802 FOR MOUNTING HEIGHTS
XX' DR	DISPLAY RAIL (NUMBER INDICATES LENGTH IN FEET) - REF D2/A-802 FOR MOUNTING HEIGHTS
EWC	ELECTRIC WATER COOLER
BEJ	BUILDING EXPANSION JOINT
FE	WALL MOUNTED FIRE EXTINGUISHER, N.I.C.
FEC	FIRE EXTINGUISHER CABINET - REF SHEET LS-102
DS	DOWN SPOUT

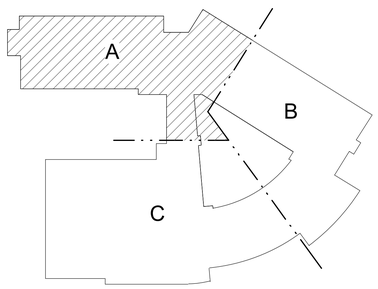

KEY PLAN
NOT TO SCALE

Received by SBBCC 3.2.2015

S.B. Ballard Construction Company
RRMM ARCHITECTS
WALLER TODD & SADLER ARCHITECTS
The Livas Group Architects, P.C.

MARK	DATE	DESCRIPTION	BY

REVISIONS

DATE	03-03-2015
PROJECT	10105.22
DESIGNED	LRS
DRAWN	HJH
CHECKED	DRJ

COMMONWEALTH OF VIRGINIA
C. DUANE M. HARVER
Lic. No. 6310
03/03/15
ARCHITECT

SBBCC PROJECT NUMBER NPS-2014-317
VIRGINIA DEPARTMENT OF EDUCATION 118-48-00-100

PROJECT
CITY OF NORFOLK AND NORFOLK PUBLIC SCHOOLS
BROAD CREEK IB ELEMENTARY SCHOOL
NORFOLK, VIRGINIA

DRAWING
FIRST FLOOR PLAN - AREA 'A1'

SHEET
A-101

C:\Users\rgossett\Documents\10105-22 Broad Creek Elem School - Central_rgossett.rvt
3/3/2015 5:15:31 PM

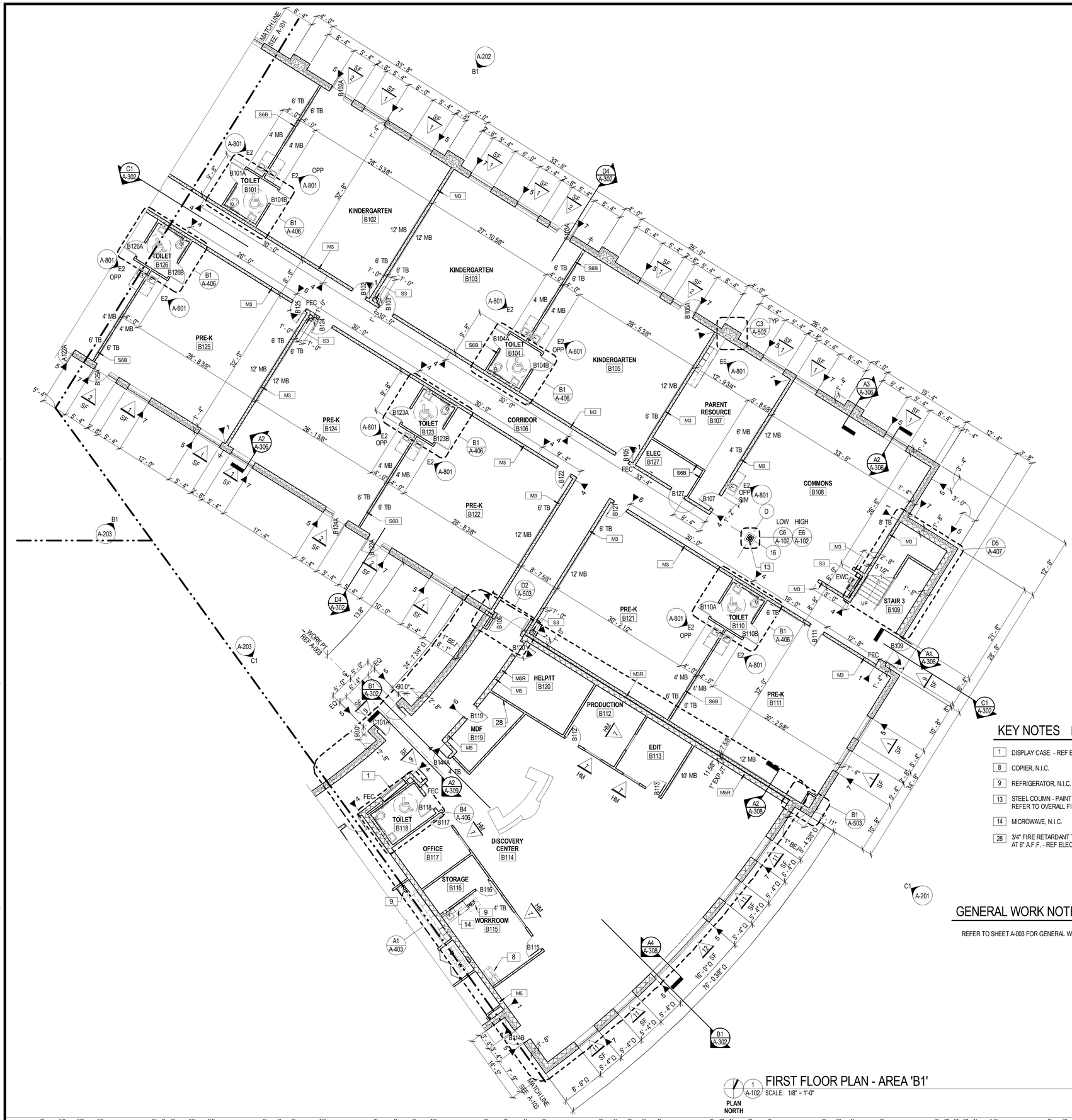

FIRST FLOOR PLAN - AREA 'B1'

1 / A-102 SCALE: 1/8" = 1'-0"

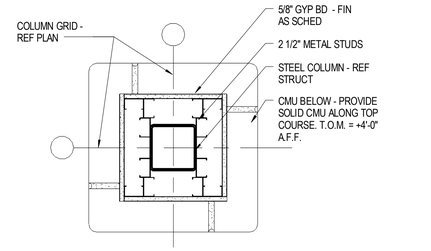

PLAN DETAIL

E6 / A-102 SCALE: 1 1/2" = 1'-0"

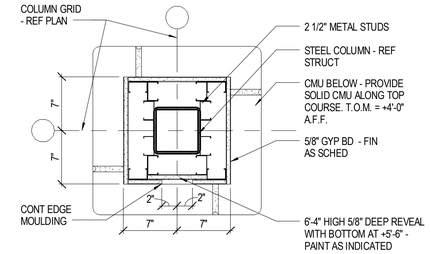

PLAN DETAIL

D6 / A-102 SCALE: 1 1/2" = 1'-0"

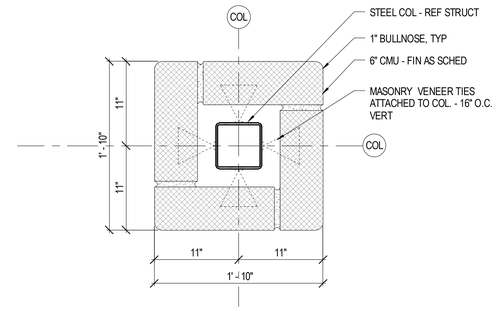

PLAN DETAIL

C6 / A-102 SCALE: 1 1/2" = 1'-0"

KEY NOTES

X

1	DISPLAY CASE. - REF ENLARGED PLAN
8	COPIER, N.I.C.
9	REFRIGERATOR, N.I.C.
13	STEEL COUMN - PAINT WHERE EXPOSED; REFER TO STRUCT DWGS. REFER TO OVERALL FIRST FLOOR PLAN FOR COLUMN GRID LOCATION.
14	MICROWAVE, N.I.C.
28	3/4" FIRE RETARDANT TREATED PLYWOOD. 4' WIDE BY 8' HIGH, BOTTOM AT 6" A.F.F. - REF ELECTRICAL DRAWINGS.

LEGEND

XX' MB	MARKER BOARD (NUMBER INDICATES LENGTH IN FEET) - REF D2/A-802 FOR MOUNTING HEIGHTS
XX' TB	TACK BOARD (NUMBER INDICATES LENGTH IN FEET) - REF D2/A-802 FOR MOUNTING HEIGHTS
XX' DR	DISPLAY RAIL (NUMBER INDICATES LENGTH IN FEET) - REF D2/A-802 FOR MOUNTING HEIGHTS
EWC	ELECTRIC WATER COOLER
BEJ	BUILDING EXPANSION JOINT
FE	WALL MOUNTED FIRE EXTINGUISHER, N.I.C.
FEC	FIRE EXTINGUISHER CABINET - REF SHEET LS-102
DS	DOWN SPOUT

GENERAL WORK NOTES

REFER TO SHEET A-003 FOR GENERAL WORK NOTES APPLYING TO ALL PLANS

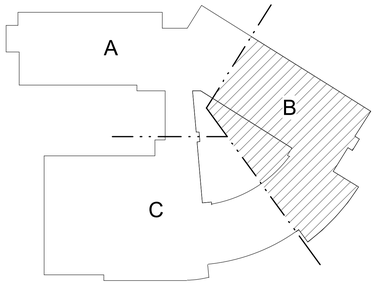

KEY PLAN

NOT TO SCALE

Received by SBBCC 3.2.2015

S.B. Ballard Construction Company

RRMM ARCHITECTS

WALLER TODD & SADLER ARCHITECTS

The Livas Group Architects, P.C.

MARK	DATE	DESCRIPTION	BY
REVISIONS			

DATE	03-03-2015
PROJECT	10105.22
DESIGNED	LRS
DRAWN	HJH
CHECKED	DRJ

COMMONWEALTH OF VIRGINIA
C. DUANE M. HARVER
Lic. No. 6310
03/03/15
ARCHITECT

SBBCC PROJECT NUMBER: NPS-2014-317
VIRGINIA DEPARTMENT OF EDUCATION: 116-49-00-100

PROJECT
CITY OF NORFOLK AND NORFOLK PUBLIC SCHOOLS
BROAD CREEK IB ELEMENTARY SCHOOL
NORFOLK, VIRGINIA

DRAWING
FIRST FLOOR PLAN - AREA 'B1'

SHEET
A-102

C:\Users\rgossett\Documents\10105-22 Broad Creek Elem School - Central_cgossett.rvt
3/3/2015 5:15:51 PM

GENERAL WORK NOTES

REFER TO SHEET A-003 FOR GENERAL WORK NOTES APPLYING TO ALL PLANS

KEY NOTES X

2 OPERABLE PANEL PARTITION - SEE REF CLG PLANS
3 METAL LOCKERS ON CMU BASE - REF ENLARGED PLAN
4 BY-PASSING STAGE CURTAINS (MAIN DRAPE): 2 - 19'-0" W X 15'-0" H
5 BY-PASSING STAGE CURTAINS (REAR CURTAINS) : 2 - 19'-0" W X 20'-0" H
6 STAGE CURTAINS (VALANCE CURTAIN): 1 - 36'-0"-W X 3'-0" H – (ABOVE)
7 VENDING MACHINE, N.I.C.
8 COPIER, N.I.C.
9 REFRIGERATOR, N.I.C.
10 WALL MOUNTED ADA PUSH PAD
12 "KNOCK-BOX 3200 SERIES" OR APPROVED EQUAL AS MFR'S BY KNOX COMPANY. UNIT TO BE RECESSED IN BRICK AT +4'-4" AFF - REF A1/A-402
13 STEEL COLUMN - PAINT WHERE EXPOSED; REFER TO STRUCT DWGS. REFER TO OVERALL FIRST FLOOR PLAN FOR COLUMN GRID LOCATION.
14 MICROWAVE, N.I.C.
15 RECESSED ENTRANCE MAT - SIZE TO PERIMETER OF EXPOSED FLOOR SLAB WITHIN SPACE INDICATED.
16 BENCHES, N.I.C.
17 WALL MOUNTED CARD READER, REF ELEC. DWGS
18 WASHER AND DRYER
19 WASHER AND DRYER, N.I.C.
21 CUBICAL CURTAIN AND TRACK SYSTEM, REF FINISH SCHEDULE (CC1)
23 MOP SINK - REF PLUMB DWGS AND ENLARGED TOILET PLANS.
25 ROOF ACCESS SHIPS LADDER WITH ROOF SCUTTLE ABOVE.
26 DEDICATION PLAQUE AND TIME CAPSULE. REF SHEET A-803.
27 6" DIAMETER CONCRETE FILLED SCHEDULE 40 PIPE BOLLARD, PAINTED. REF CIVIL DRAWINGS FOR DETAILS.
29 A/V INTERCOM AND MASTER STATION - REF ELEC DWGS
30 INTRUSION DETECTION SYSTEM KEY-PAD STATION.

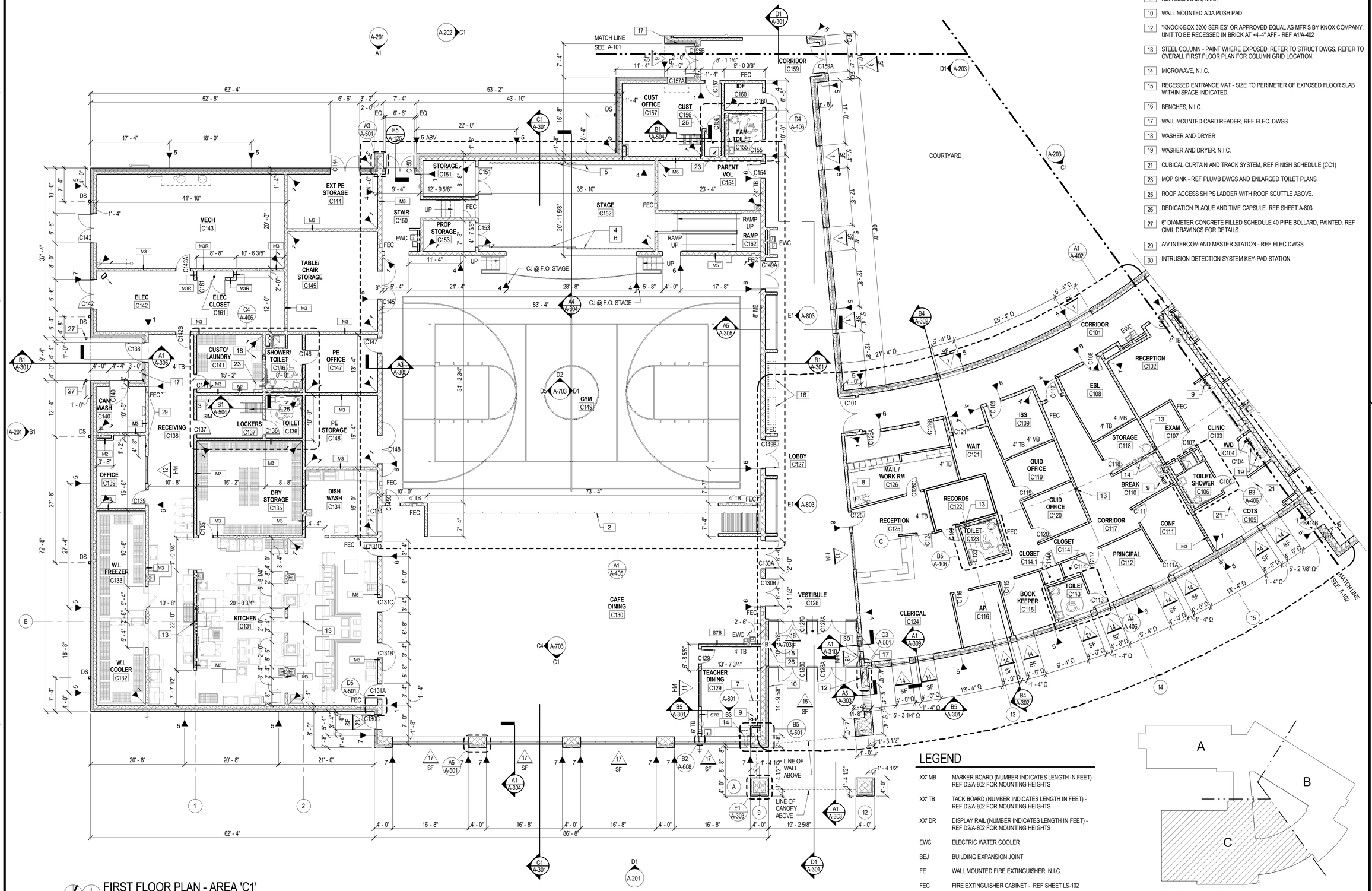

LEGEND

XX' MB	MARKER BOARD (NUMBER INDICATES LENGTH IN FEET) - REF D2/A-802 FOR MOUNTING HEIGHTS
XX' TB	TACK BOARD (NUMBER INDICATES LENGTH IN FEET) - REF D2/A-802 FOR MOUNTING HEIGHTS
XX' DR	DISPLAY RAIL (NUMBER INDICATES LENGTH IN FEET) - REF D2/A-802 FOR MOUNTING HEIGHTS
EWC	ELECTRIC WATER COOLER
BEJ	BUILDING EXPANSION JOINT
FE	WALL MOUNTED FIRE EXTINGUISHER, N.I.C.
FEC	FIRE EXTINGUISHER CABINET - REF SHEET LS-102
DS	DOWN SPOUT

KEY PLAN
NOT TO SCALE

FIRST FLOOR PLAN - AREA 'C1'
SCALE: 1/8" = 1'-0"

PLAN NORTH

Received by SBBCC 3.2.2015

S.B. Ballard Construction Company
RRMM ARCHITECTS
WALLER TODD & SADLER ARCHITECTS
The Livas Group Architects, P.C.

MARK	DATE	REVISIONS	BY	DESCRIPTION

DATE	03-03-2015
PROJECT	10105.22
DESIGNED	LRS
DRAWN	HJH
CHECKED	DRJ

COMMONWEALTH OF VIRGINIA
C. DUANE M. HARVER
Lic. No. 6310
03/03/15
ARCHITECT

SBBCC PROJECT NUMBER: NPS-2014-317
VIRGINIA DEPARTMENT OF EDUCATION: 116-46-00-100

PROJECT
CITY OF NORFOLK AND NORFOLK PUBLIC SCHOOLS
BROAD CREEK IB ELEMENTARY SCHOOL
NORFOLK, VIRGINIA

DRAWING
FIRST FLOOR PLAN - AREA 'C1'

SHEET
A-103

C:\Users\rgossett\Documents\10105.22 Broad Creek Elem School - Central_rgossett.rvt
3/3/2015 5:16:42 PM

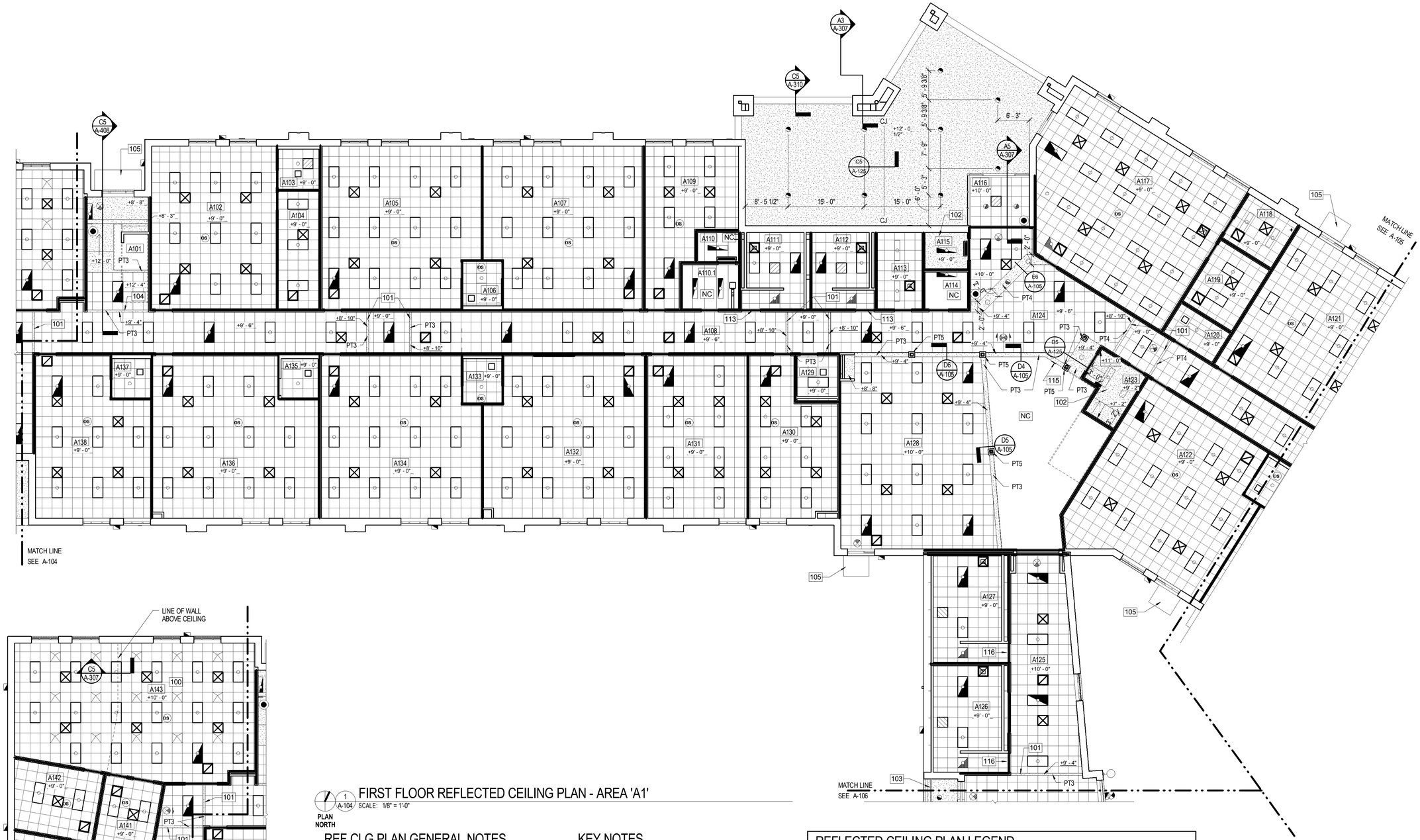

1 A-104 FIRST FLOOR REFLECTED CEILING PLAN - AREA 'A1'
SCALE: 1/8" = 1'-0"

PLAN NORTH

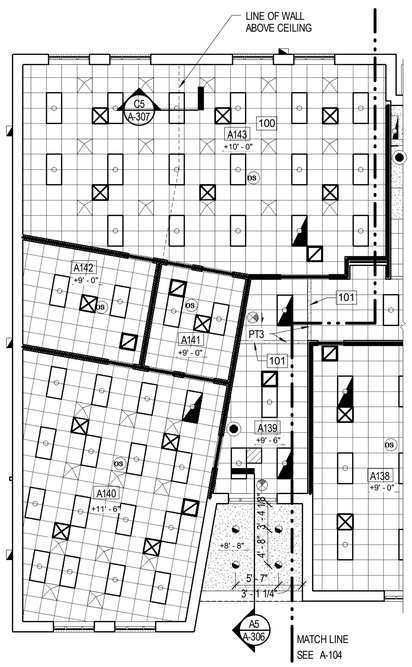

2 A-104 AREA 'A1' CONT
SCALE: 1/8" = 1'-0"

REF CLG PLAN GENERAL NOTES

1. REFER TO FLOOR PLANS AND WALL SECTIONS FOR ADDITIONAL INFORMATION.
2. PROJECTORS, PROJECTOR SPEAKERS, WIRELESS ACCESS POINTS, AND INTERCOM SPEAKER LOCATIONS (NOT INDICATED) ARE TO BE DETERMINED. COORDINATE FINAL LOCATION WITH ACHITECT.
3. REFER TO ELECTRICAL LIGHTING AND AUXILIARY PLANS FOR WALL MOUNTED AND UNDERCABINET FIXTURES NOT INDICATED.
4. SPRINKLER HEADS (NOT INDICATED) SHALL BE CENTERED IN ACT OR WITHIN SPACE IN GYPSUM BOARD CEILING.
5. REFER TO MECH AND ELEC DRAWINGS FOR CEILING MOUNTED FIXTURE TYPES AND DIFFUSER LOCATIONS. NOTIFY ARCHITECT (PRIOR TO INSTALLATION) OF CONFLICTS WITH LOCATIONS INDICATED ON DRAWINGS. ADDITIONAL FIXTURES OR OTHER CEILING MATERIALS SHOWN ON ELECTRICAL OR MECHANICAL DRAWINGS BUT NOT SHOWN ON RCP'S ARE INCLUDED IN THE BASE BID.
6. SUPPLY AND DIFFUSER GRILLES ARE INDICATED DIAGRAMATICALLY IN RCP FOR LOCATION ONLY. REFER TO MECHANICAL DWG'S FOR ACTUAL SIZE AND TYPE TO BE PROVIDED.
7. 24"x24" ACOUSTICAL CEILING PANELS (ACT) SHALL BE USED BE THOUGHOUT. AT LOCATIONS WHERE AN ACOUSTICAL CEILING PANEL (ACT) WILL BE 5" OR LESS IN WIDTH, USE A 2X4 ATC OF THE SAME TYPE AND MANUFACTURER. FOR EXAMPLE: IN LIEU OF A 3"X24" ACT NEXT TO A 24"X24" ACT, THE PANEL SHALL BE 27"X24" AND EXTEND TO THE WALL OR SOFFIT.
8. REFER TO SHEET A-509 FOR TYPICAL PARTITION TERMINATIONS AT STRUCTURAL ELEMENTS WITH ALL EXTENSIONS OF FINISHES AND SOUND ATTENUATTION.
9. STRUCTURAL STEEL SHOWN FOR REFRENCE ONLY - REF STRUCTURAL DRAWINGS FOR EXACT SIZE AND LOCATIONS.
10. AT ALL SHOWER LOCATIONS, USE 5/8" MOISTURE RESISTANT GYP BD.

KEY NOTES

100	GYP BD ACOUSTICAL CEILING ABOVE LAY-IN CEILING AT +12'-2" AFF - REF C5/A-307.
101	GYP BD BULKHEAD - REF B5/A-105.
102	FIRE RESISTANCE RATED CEILING ASSEMBLY - REF SHEET LS-101.
103	CONT PREFIN SOFFIT VENT.
104	GYP BD BULKHEAD - REF C5/A-105
105	PREFAB CANOPY (NIC)
113	OPENING HEAD HEIGHT AT +7'-4" AFF TO BOT OF MAS
115	SIDEWALL GRILLE, PT-3 - REF MECH DWGS
116	OPENING HEAD HEIGHT AT +8'-8" AFF TO BOT OF MAS

REFLECTED CEILING PLAN LEGEND

INTERIOR GYPSUM BOARD OR EXTERIOR FINISH SYSTEM CEILING	LIGHT FIXTURES
2'-0" x 2'-0" LAY-IN ACOUSTICAL TILE CEILING IN SUSPENDED GRID (ACT)	DOWN LIGHT
	EXTERIOR WALL MTD LIGHT
	SUPPLY DIFFUSER
NC — NO CEILING	RETURN AIR GRILLE
	UNIT HEATER
EXIT LIGHT	EXHAUST FAN
X — TRACK LIGHT, NUMBER INDICATES LENGTH IN FEET	CEILING MOUNTED CCTV CAMERA
	+X'-X" — CEILING HEIGHT
PYRAMID ACOUSTICAL DIFFUSER	OS — OCCUPANCY SENSOR

PARTITION TERMINATION LEGEND

PARTITION WHICH PENETRATES THE CLG & TERMINATES 4" ABOV FINISHED CLG. UON

PARTITION WHICH CONTINUES THROUGH CLG TO BOTTOM OF ROOF DECK ABV (UNLESS NOTED OTHERWISE). AT GYP BD PARTITION PROVIDE BATT INSUL IN VOIDS IN DECK FOR SOUND TRANSMISSION BLOCKING OR CONT SEALANT. FOR ADDITIONAL INFORMATION REFER TO PARTITION TYPES AND PARTITION TYPE NOTES ON SHEET A-002 AND TYPICAL PARTITION TERMINATION DETAILS ON SHEET A-509.

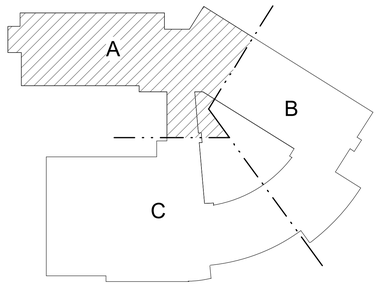

KEY PLAN
NOT TO SCALE

Received by SBBCC 3.2.2015

S.B. Ballard Construction Company
RRMM ARCHITECTS
WALLER TODD & SADLER ARCHITECTS
The Livas Group Architects, P.C.

MARK	DATE	DESCRIPTION

REVISIONS

DATE	03-03-2015
PROJECT	10105.22
DESIGNED	LRS
DRAWN	HJH
CHECKED	DRJ

COMMONWEALTH OF VIRGINIA
DUANE M. HARVER
Lic. No. 6310
03/03/15
ARCHITECT

PROJECT
CITY OF NORFOLK AND NORFOLK PUBLIC SCHOOLS
BROAD CREEK IB ELEMENTARY SCHOOL
NORFOLK, VIRGINIA

SBBCC PROJECT NUMBER: NPS-2014-317
VIRGINIA DEPARTMENT OF EDUCATION: 118-46-00-100

DRAWING
FIRST FLOOR REFLECTED CEILING PLAN - AREA 'A1'

SHEET
A-104

C:\Users\rgossett\Documents\10105-22 Broad Creek Elem School - Central_cgossett.rvt
3/3/2015 5:17:19 PM

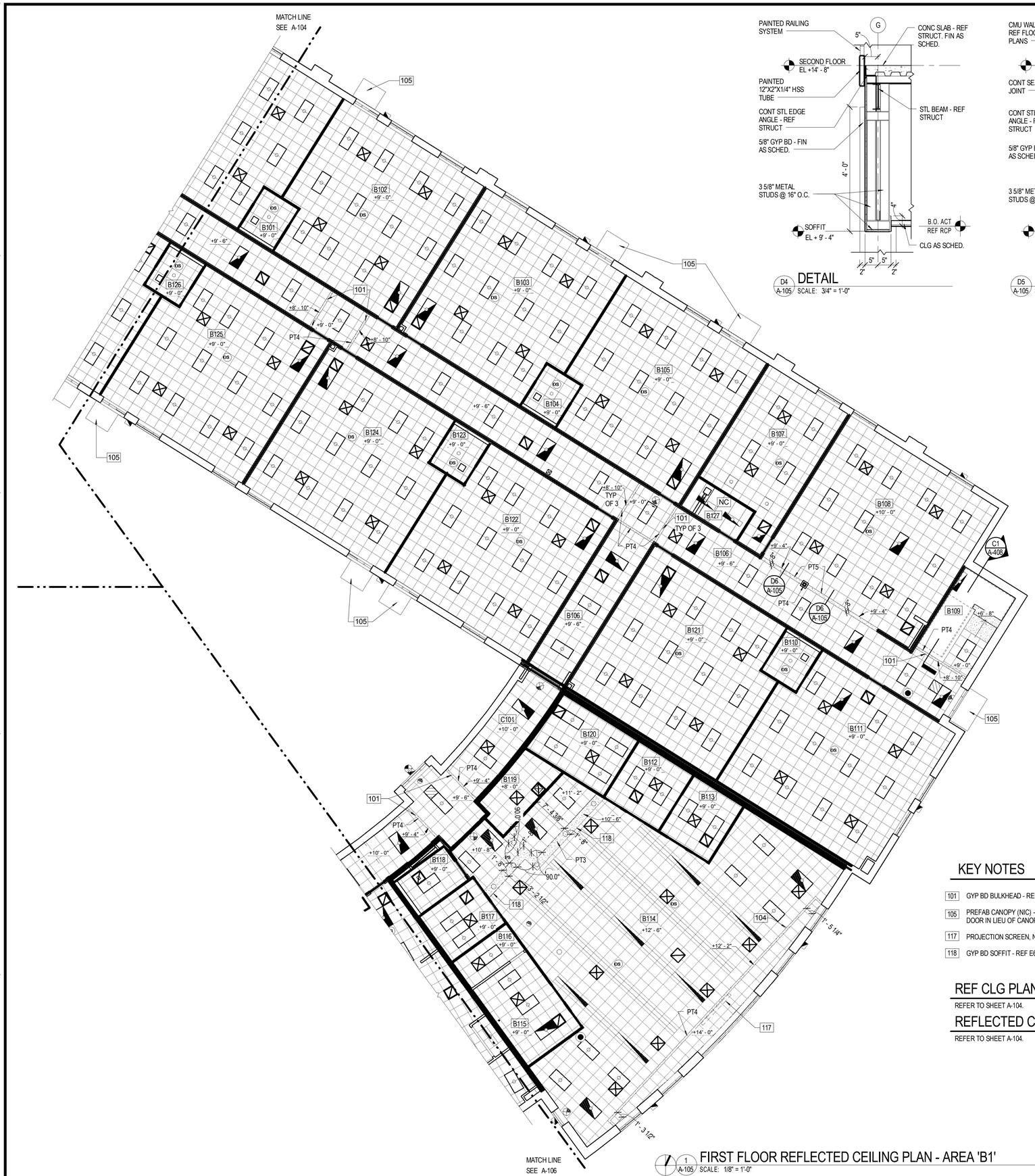

FIRST FLOOR REFLECTED CEILING PLAN - AREA 'B1'

1 / A-105 SCALE: 1/8" = 1'-0"

DETAIL

D4 / A-105 SCALE: 3/4" = 1'-0"

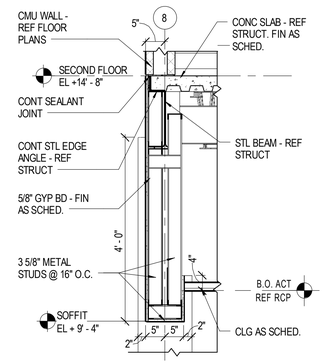

DETAIL

D5 / A-105 SCALE: 3/4" = 1'-0"

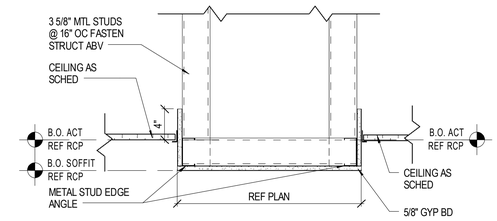

CEILING DETAIL

E6 / A-105 SCALE: 1 1/2" = 1'-0"

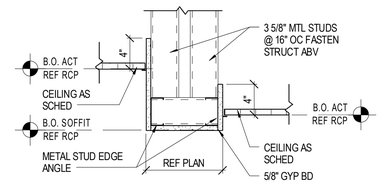

CEILING DETAIL

D6 / A-105 SCALE: 1 1/2" = 1'-0"

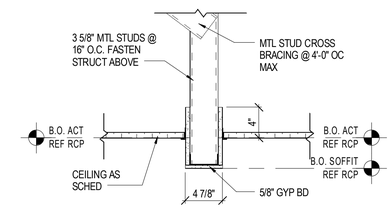

CEILING DETAIL

C5 / A-105 SCALE: 1 1/2" = 1'-0"

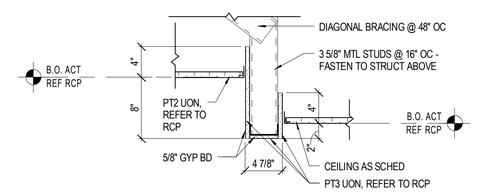

CEILING DETAIL - TYP CORRIDOR BULKHEAD

B5 / A-105 SCALE: 1 1/2" = 1'-0"

KEY NOTES

101 GYP BD BULKHEAD - REF B5/A-105.

105 PREFAB CANOPY (NIC) - PROVIDE WALL MTD FIXTURE ABOVE DOOR IN LIEU OF CANOPY FIXTURE WHERE INDICATED.

117 PROJECTION SCREEN, NIC

118 GYP BD SOFFIT - REF E6/A-105

REF CLG PLAN GENERAL NOTES

REFER TO SHEET A-104.

REFLECTED CEILING PLAN LEGEND

REFER TO SHEET A-104.

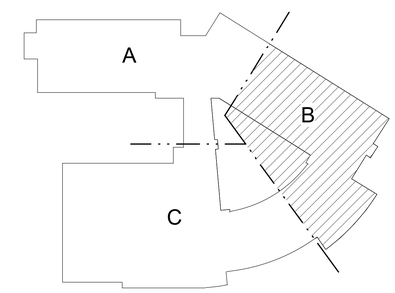

KEY PLAN

NOT TO SCALE

Received by SBBCC 3.2.2015

S.B. Ballard Construction Company

RRMM ARCHITECTS

WALLER TODD & SADLER ARCHITECTS

The Livas Group Architects, P.C.

MARK	DATE	REVISIONS	BY	DESCRIPTION

DATE	03-03-2015
PROJECT	10105.22
DESIGNED	LRS
DRAWN	HJH
CHECKED	DRJ

COMMONWEALTH OF VIRGINIA
C. DUANE M. HARVER
Lic. No. 6310
03/03/15
ARCHITECT

SBBCC PROJECT NUMBER NFS-2014-317
VIRGINIA DEPARTMENT OF EDUCATION 118-48-00-100

PROJECT
CITY OF NORFOLK AND NORFOLK PUBLIC SCHOOLS
BROAD CREEK IB ELEMENTARY SCHOOL
NORFOLK, VIRGINIA

DRAWING
FIRST FLOOR REFLECTED CEILING PLAN - AREA 'B1'

SHEET
A-105

C:\Users\rgosset\Documents\10105-22 Broad Creek Elem School - Central_rgosset.rvt

3/3/2015 5:17:49 PM

KEY NOTES

101	GYP BD BULKHEAD - REF B5/A-105.
103	CONT PREFIN SOFFIT VENT
104	GYP BD BULKHEAD - REF C5/A-105
106	STAGE CURTAINS - REF SHEET A-103.
107	PAINTED STEEL COLUMN
108	CUBICLE CURTAIN TRACK CC1 - MOUNTED TO CEILING GRID.
109	ROOF ACCESS HATCH - REF FLOOR AND ROOF PLANS
110	PREFINISHED ACOUSTICAL DECK
111	PREFINISHED ACOUSTICAL DECK - PAINTED BLACK
112	TRUSSES - PT3
113	OPENING HEAD HEIGHT AT +7'-4" AFF TO B.O.M. - TYPICAL
114	OPENING HEAD HEIGHT AT +8'-0" AFF TO B.O.M. - TYPICAL
117	PROJECTION SCREEN, NIC
119	BASKETBALL GOAL HUNG FROM STRUCT ABOVE. REF STRUCT FOR SUPPORT AND AS RECOMMENDED BY MFR.
120	FABRIC DUCT SOCKS - REF MECH DWGS

REF CLG PLAN GENERAL NOTES

REFER TO SHEET A-104.

REFLECTED CEILING PLAN LEGEND

REFER TO SHEET A-104.

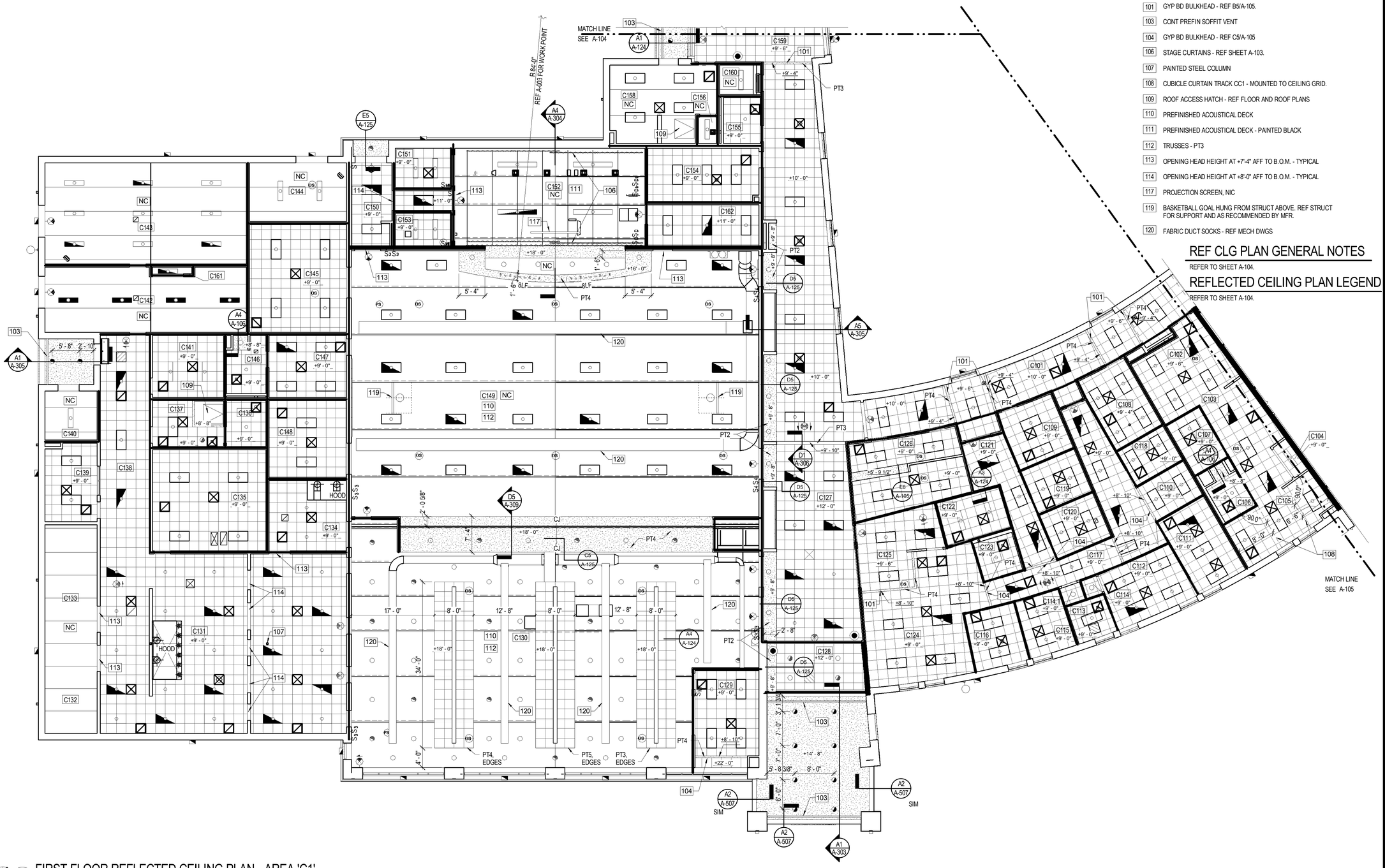

1 A-106 FIRST FLOOR REFLECTED CEILING PLAN - AREA 'C1'
SCALE: 1/8" = 1'-0"

PLAN NORTH

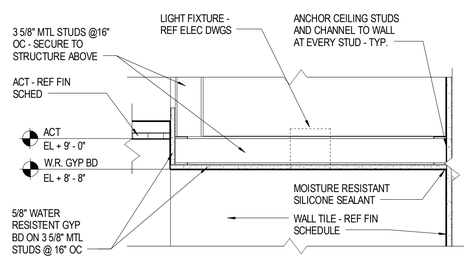

A4 A-106 SHOWER CEILING DETAIL
SCALE: 1 1/2" = 1'-0"

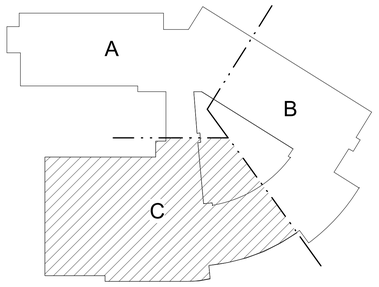

KEY PLAN
NOT TO SCALE

Received by SBBCC 3.2.2015

S.B. Ballard Construction Company
RRMM ARCHITECTS
WALLER TODD & SADLER ARCHITECTS
The Livas Group Architects, P.C.

MARK	DATE	BY	DESCRIPTION
REVISIONS			

DATE	03-03-2015
PROJECT	10105.22
DESIGNED	LRS
DRAWN	HJH
CHECKED	DRJ

COMMONWEALTH OF VIRGINIA
C. DUANE M. HARVER
Lic. No. 6310
03/03/15
ARCHITECT

PROJECT
CITY OF NORFOLK AND NORFOLK PUBLIC SCHOOLS
BROAD CREEK IB ELEMENTARY SCHOOL
NORFOLK, VIRGINIA

SBBCC PROJECT NUMBER: NPS-2014-317
VIRGINIA DEPARTMENT OF EDUCATION: 118-48-00-100

DRAWING
FIRST FLOOR REFLECTED CEILING PLAN - AREA 'C1'

SHEET
A-106

C:\Users\rgossett\Documents\10105-22 Broad Creek Elem School - Central_rgossett.rvt
3/3/2015 7:14:43 PM

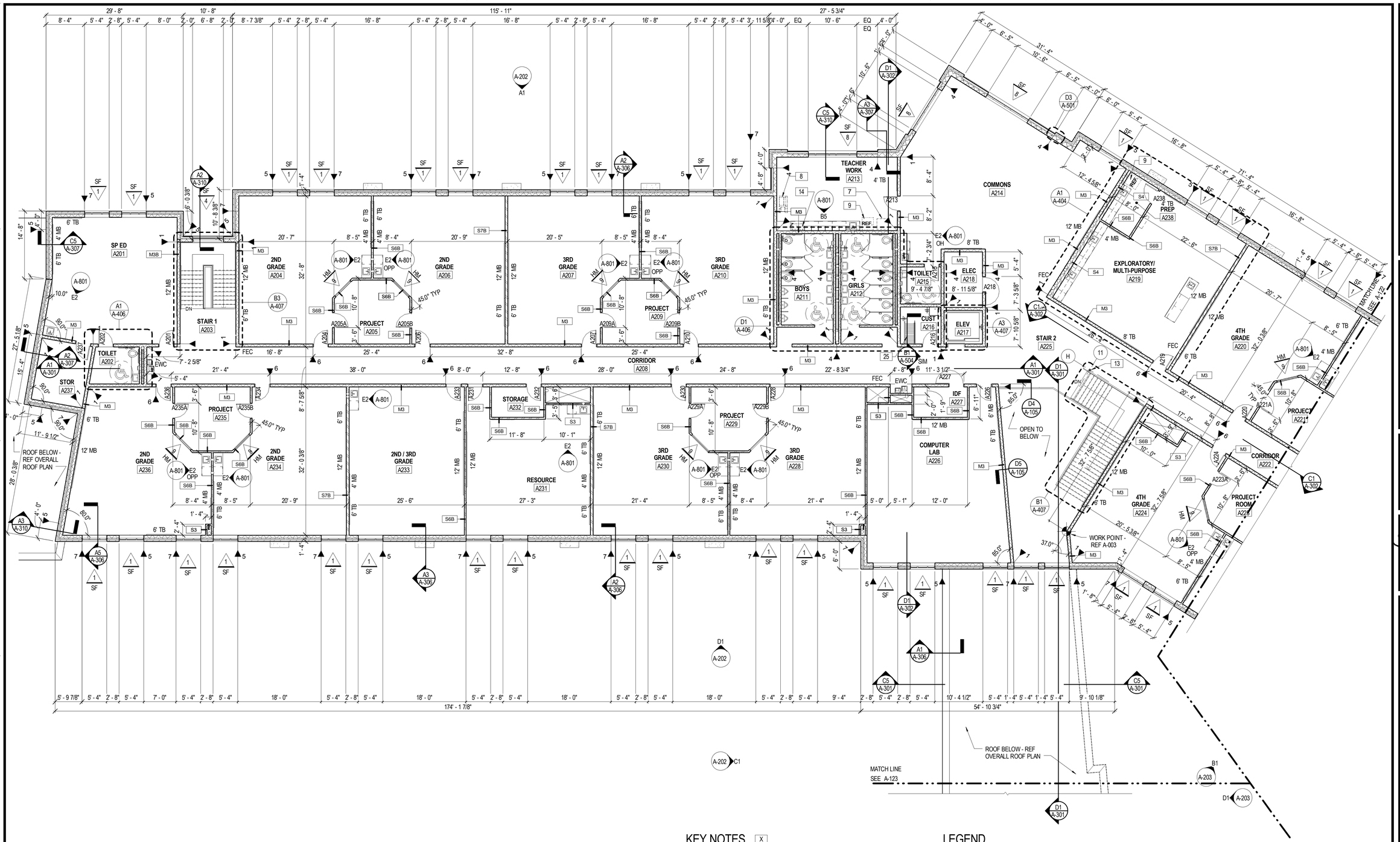

SECOND FLOOR PLAN - AREA 'A2'

A-121 SCALE: 1/8" = 1'-0"

PLAN NORTH

GENERAL WORK NOTES

REFER TO SHEET A-003 FOR GENERAL WORK NOTES APPLYING TO ALL PLANS

KEY NOTES X

7	VENDING MACHINE, N.I.C.
8	COPIER, N.I.C.
9	REFRIGERATOR, N.I.C.
13	STEEL COLUMN - PAINT WHERE EXPOSED; REFER TO STRUCT DWGS. REFER TO OVERALL FIRST FLOOR PLAN FOR COLUMN GRID LOCATION.
14	MICROWAVE, N.I.C.
25	ROOF ACCESS SHIPS LADDER WITH ROOF SCUTTLE ABOVE - REF A-504 FOR DETAILS

LEGEND

XX' MB	MARKER BOARD (NUMBER INDICATES LENGTH IN FEET) - REF D2/A-802 FOR MOUNTING HEIGHTS
XX' TB	TACK BOARD (NUMBER INDICATES LENGTH IN FEET) - REF D2/A-802 FOR MOUNTING HEIGHTS
XX' DR	DISPLAY RAIL (NUMBER INDICATES LENGTH IN FEET) - REF D2/A-802 FOR MOUNTING HEIGHTS
EWC	ELECTRIC WATER COOLER
BEJ	BUILDING EXPANSION JOINT
FE	WALL MOUNTED FIRE EXTINGUISHER, N.I.C.
FEC	FIRE EXTINGUISHER CABINET - REF SHEET LS-102
DS	DOWN SPOUT

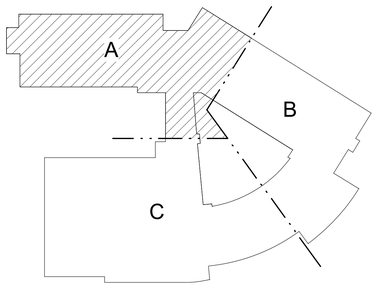

KEY PLAN

NOT TO SCALE

Received by SBBCC 3.2.2015

S.B. Ballard Construction Company

RRMM ARCHITECTS

WALLER TODD & SADLER ARCHITECTS

The Livas Group Architects, P.C.

MARK	DATE	DESCRIPTION

REVISIONS

		BY
DATE	03-03-2015	
PROJECT	10105.22	LRS
DESIGNED		HJH
DRAWN		DRJ
CHECKED		

COMMONWEALTH OF VIRGINIA C. DUANE M. HARVER Lic. No. 6310 03/03/15 ARCHITECT

PROJECT: CITY OF NORFOLK AND NORFOLK PUBLIC SCHOOLS
BROAD CREEK IB ELEMENTARY SCHOOL
NORFOLK, VIRGINIA

SBBCC PROJECT NUMBER: NPS-2014-317
VIRGINIA DEPARTMENT OF EDUCATION: 118-49-00-100

DRAWING: SECOND FLOOR PLAN - AREA 'A2'

SHEET A-121

C:\Users\rgossett\Documents\10105-22 Broad Creek Elem School - Central_cgossett.rvt

3/3/2015 5:19:11 PM

GENERAL WORK NOTES

REFER TO SHEET A-003 FOR GENERAL WORK NOTES APPLYING TO ALL PLANS

KEY NOTES [X]

9	REFRIGERATOR, N.I.C.
13	STEEL COUMN - PAINT WHERE EXPOSED; REFER TO STRUCT DWGS. REFER TO OVERALL FIRST FLOOR PLAN FOR COLUMN GRID LOCATION.
23	MOP SINK - REF PLUMB DWGS

LEGEND

XX' MB	MARKER BOARD (NUMBER INDICATES LENGTH IN FEET) - REF D2/A-802 FOR MOUNTING HEIGHTS
XX' TB	TACK BOARD (NUMBER INDICATES LENGTH IN FEET) - REF D2/A-802 FOR MOUNTING HEIGHTS
XX' DR	DISPLAY RAIL (NUMBER INDICATES LENGTH IN FEET) - REF D2/A-802 FOR MOUNTING HEIGHTS
EWC	ELECTRIC WATER COOLER
BEJ	BUILDING EXPANSION JOINT
FE	WALL MOUNTED FIRE EXTINGUISHER, N.I.C.
FEC	FIRE EXTINGUISHER CABINET - REF SHEET LS-102
DS	DOWN SPOUT

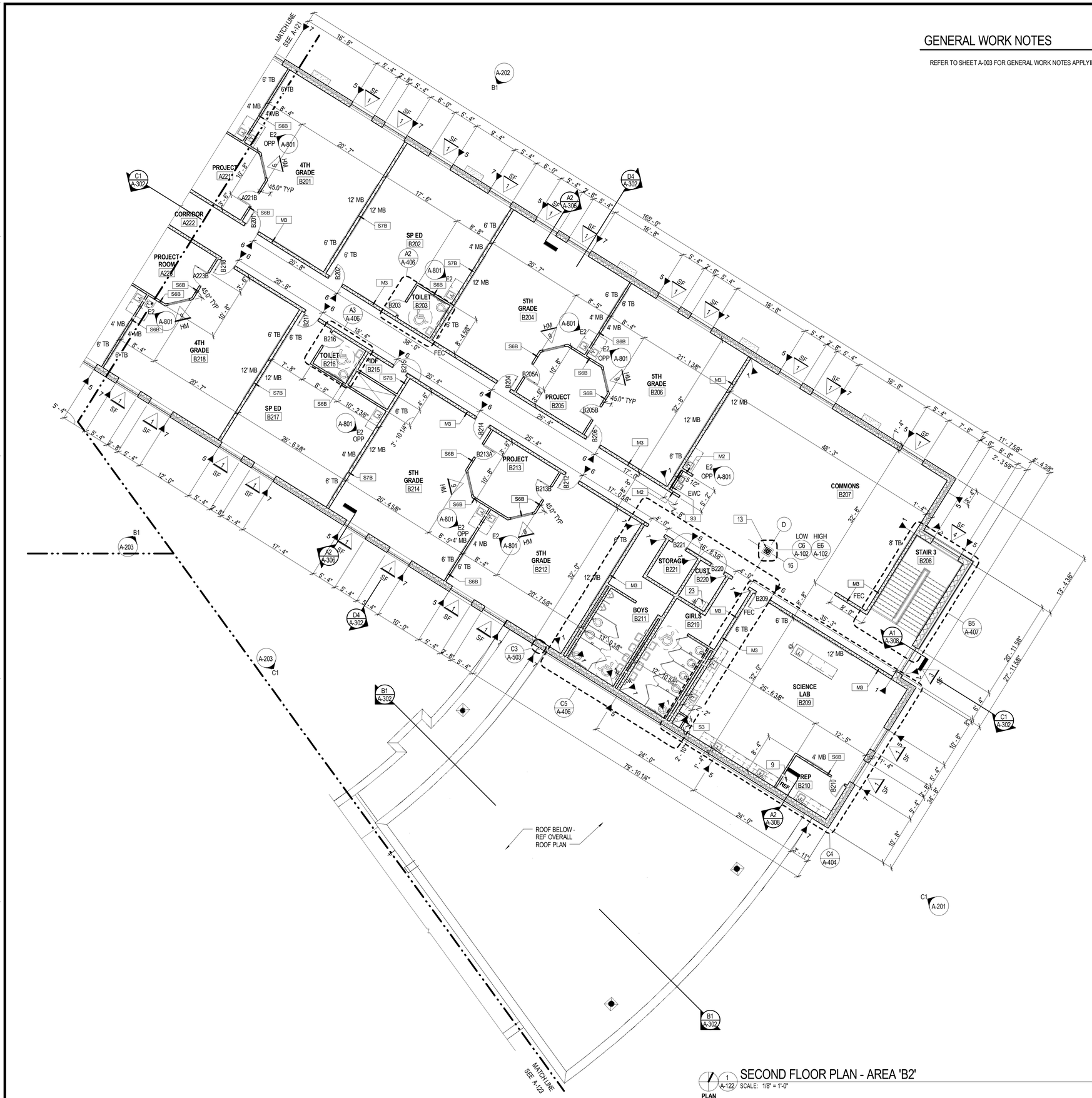

SECOND FLOOR PLAN - AREA 'B2'

SCALE: 1/8" = 1'-0"

PLAN NORTH

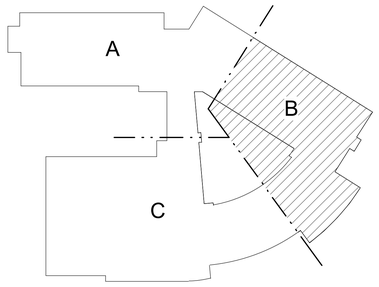

KEY PLAN

NOT TO SCALE

Received by SBBCC 3.2.2015

S.B. Ballard Construction Company

RRMM ARCHITECTS

WALLER TODD & SADLER ARCHITECTS

The Livas Group Architects, P.C.

MARK	DATE	BY	DESCRIPTION

REVISIONS

DATE	03-03-2015
PROJECT	10105.22
DESIGNED	LRS
DRAWN	HJH
CHECKED	DRJ

COMMONWEALTH OF VIRGINIA — DUANE M. HARVER — Lic. No. 6319 — 03/03/15 — ARCHITECT

PROJECT: CITY OF NORFOLK AND NORFOLK PUBLIC SCHOOLS
BROAD CREEK IB ELEMENTARY SCHOOL
NORFOLK, VIRGINIA

SBBCC PROJECT NUMBER NPS-2014-317
VIRGINIA DEPARTMENT OF EDUCATION 118-48-00-100

DRAWING: SECOND FLOOR PLAN - AREA 'B2'

SHEET A-122

C:\Users\cgossett\Documents\10105-22 Broad Creek Elem School - Central_cgossett.rvt

3/3/2015 5:19:37 PM

GENERAL WORK NOTES

REFER TO SHEET A-003 FOR GENERAL WORK NOTES APPLYING TO ALL PLANS

KEY NOTES X

22 FORWARD FOLDING BASKETBALL BACKSTOP AND GOAL

LEGEND

XX' MB	MARKER BOARD (NUMBER INDICATES LENGTH IN FEET) - REF D2/A-802 FOR MOUNTING HEIGHTS
XX' TB	TACK BOARD (NUMBER INDICATES LENGTH IN FEET) - REF D2/A-802 FOR MOUNTING HEIGHTS
XX' DR	DISPLAY RAIL (NUMBER INDICATES LENGTH IN FEET) - REF D2/A-802 FOR MOUNTING HEIGHTS
EWC	ELECTRIC WATER COOLER
BEJ	BUILDING EXPANSION JOINT
FE	WALL MOUNTED FIRE EXTINGUISHER, N.I.C.
FEC	FIRE EXTINGUISHER CABINET - REF SHEET LS-102
DS	DOWN SPOUT

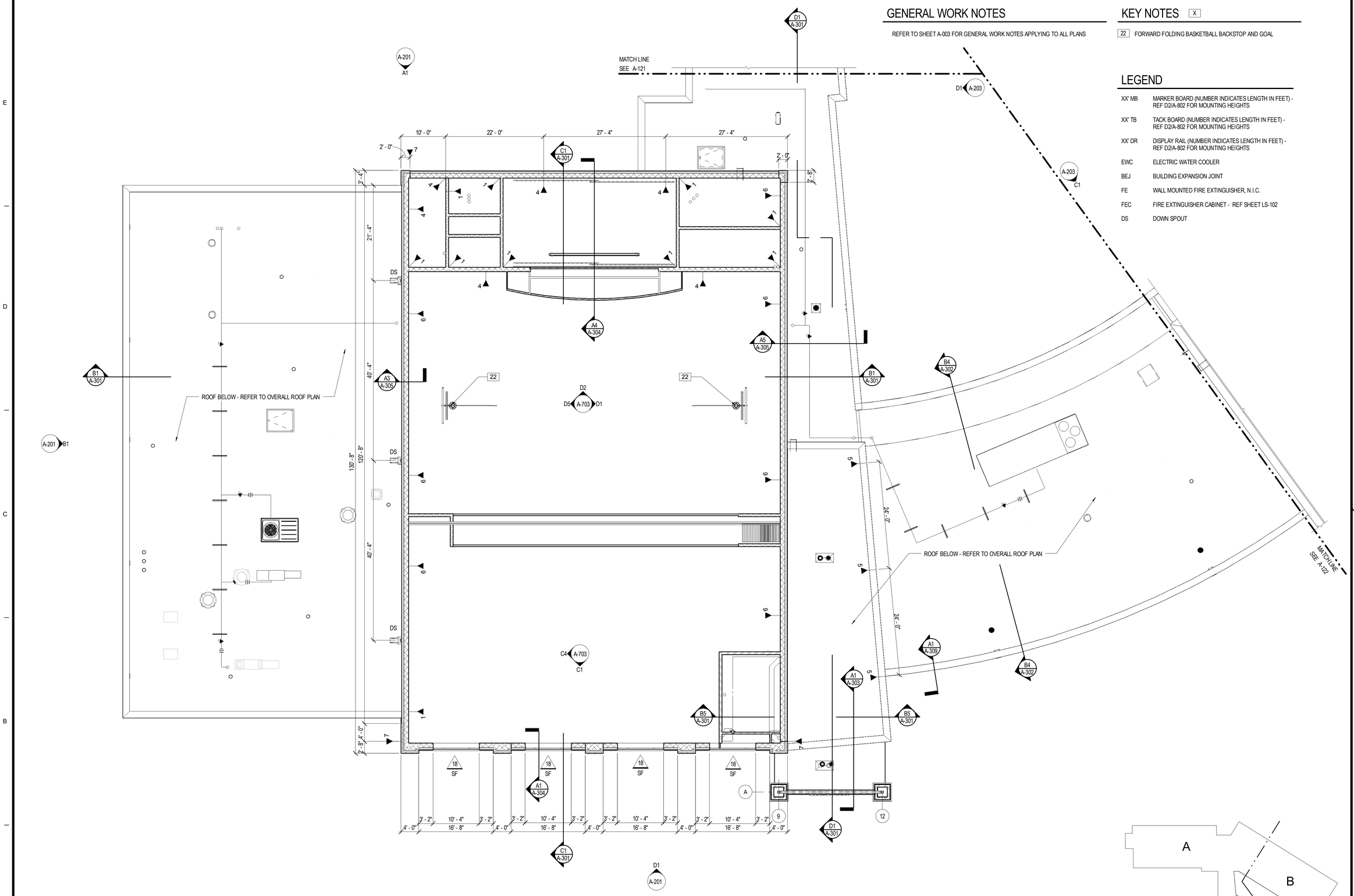

SECOND FLOOR PLAN - AREA 'C2'

1 A-123 SCALE: 1/8" = 1'-0"

PLAN NORTH

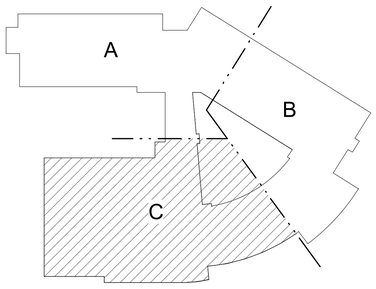

KEY PLAN

NOT TO SCALE

Received by SBBCC 3.2.2015

S.B. Ballard Construction Company

RRMM ARCHITECTS

WALLER TODD & SADLER ARCHITECTS

The Livas Group Architects, P.C.

MARK	DATE	BY	DESCRIPTION
REVISIONS			

DATE	03-03-2015
PROJECT	10105.22
DESIGNED	LRS
DRAWN	HJH
CHECKED	DRJ

COMMONWEALTH OF VIRGINIA
DUANE M. HARVER
Lic. No. 6319
03/03/15
ARCHITECT

PROJECT
CITY OF NORFOLK AND NORFOLK PUBLIC SCHOOLS
BROAD CREEK IB ELEMENTARY SCHOOL
NORFOLK, VIRGINIA

SBBCC PROJECT NUMBER: NPS-2014-317
VIRGINIA DEPARTMENT OF EDUCATION: 118-48-00-100

DRAWING
SECOND FLOOR PLAN - AREA 'C2'

SHEET
A-123

C:\Users\ngossett\Documents\10105-22 Broad Creek Elem School - Central_cgossett.rvt

3/3/2015 5:20:06 PM

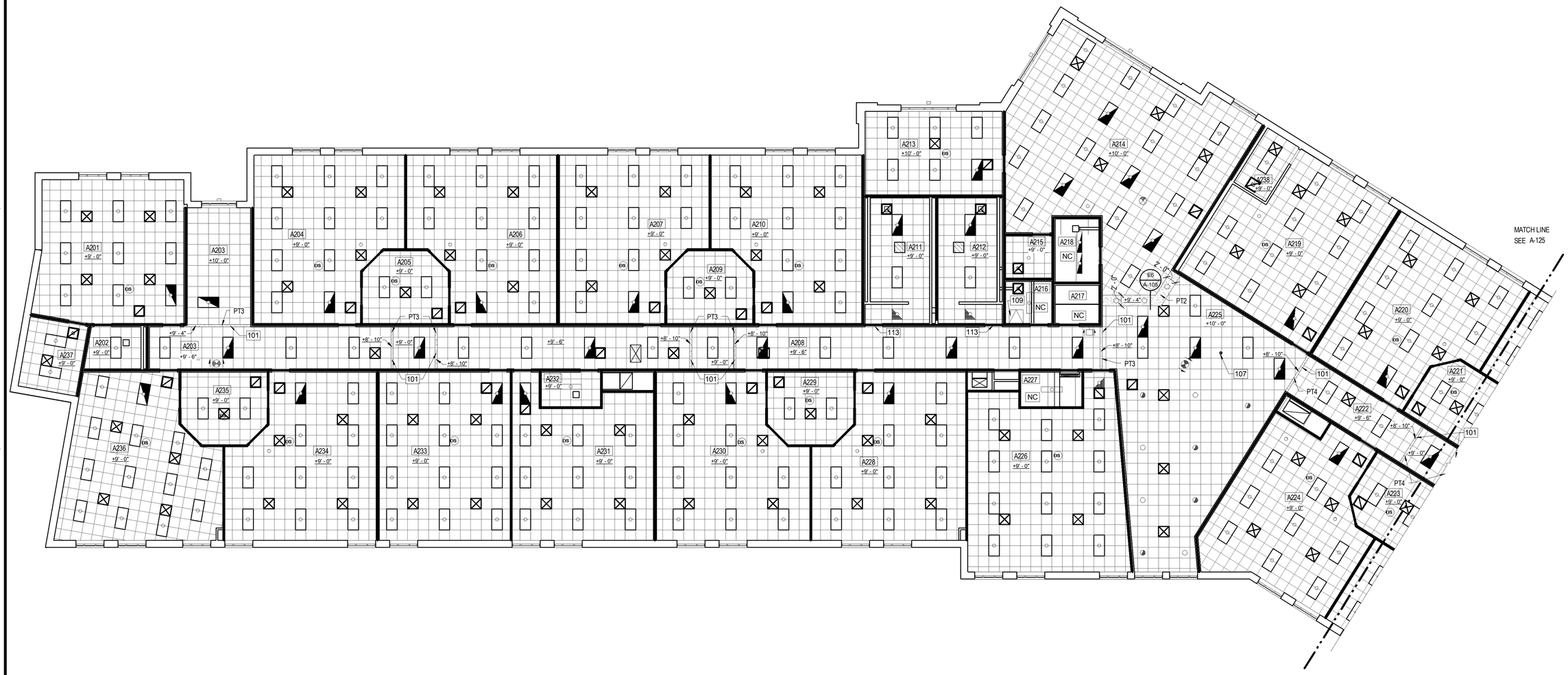

1 / A-124 SECOND FLOOR REFLECTED CEILING PLAN - AREA 'B2'

SCALE: 1/8" = 1'-0"

PLAN NORTH

KEY NOTES

101 GYP BD BULKHEAD - REF B5/A-105.

107 PAINTED STEEL COLUMN

109 ROOF ACCESS HATCH - REF FLOOR AND ROOF PLANS

113 OPENING HEAD HEIGHT AT +7'-4" AFF TO B.O.M. - TYPICAL

REF CLG PLAN GENERAL NOTES

REFER TO SHEET A-104.

REFLECTED CEILING PLAN LEGEND

REFER TO SHEET A-104.

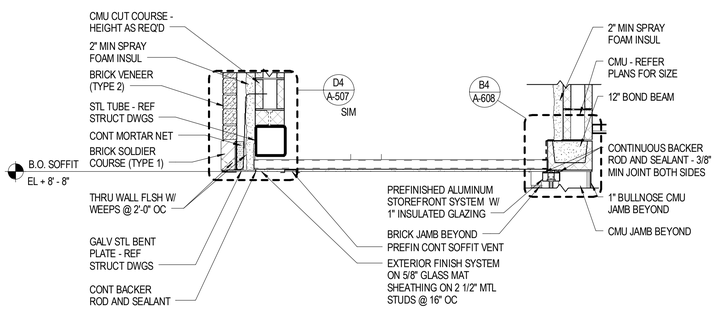

A1 / A-124 SOFFIT DETAIL

SCALE: 3/4" = 1'-0"

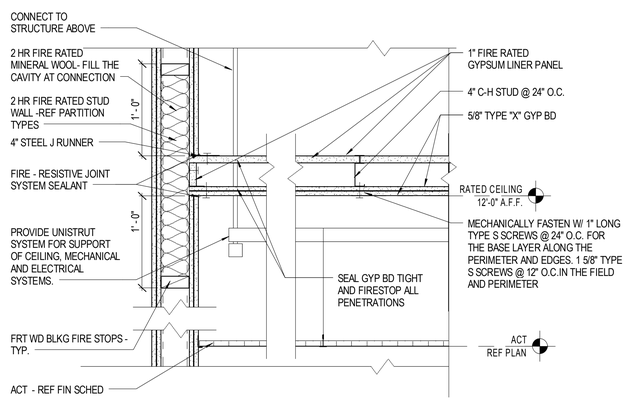

A3 / A-124 FIRE RATED CEILING AT C122

SCALE: 1 1/2" = 1'-0"

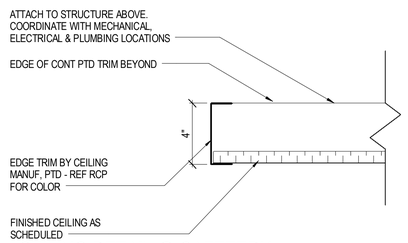

A4 / A-124 CEILING DETAIL @ CAFETERIA

SCALE: 3" = 1'-0"

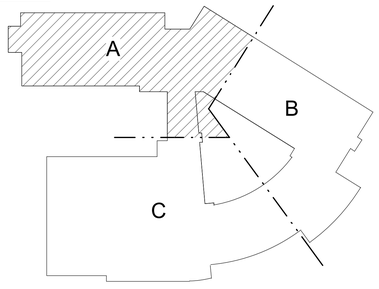

KEY PLAN

NOT TO SCALE

Received by SBBCC 3.2.2015

S.B. Ballard Construction Company

RRMM ARCHITECTS

WALLER TODD & SADLER ARCHITECTS

The Livas Group Architects, P.C.

MARK	DATE	REVISIONS	BY	DESCRIPTION

DATE	03-03-2015
PROJECT	10105.22
DESIGNED	LRS
DRAWN	HJH
CHECKED	DRJ

COMMONWEALTH OF VIRGINIA
DUANE M. HARVER
Lic. No. 6310
03/03/15
ARCHITECT

PROJECT: CITY OF NORFOLK AND NORFOLK PUBLIC SCHOOLS
BROAD CREEK IB ELEMENTARY SCHOOL
NORFOLK, VIRGINIA

SBBCC PROJECT NUMBER: NPS-2014-317
VIRGINIA DEPARTMENT OF EDUCATION: 118-48-00-100

DRAWING: SECOND FLOOR REFLECTED CEILING PLAN - AREA 'A2'

SHEET

A-124

C:\Users\rgosset\Documents\10105-22 Broad Creek Elem School - Central_rgosset.rvt

3/3/2015 5:27:21 PM

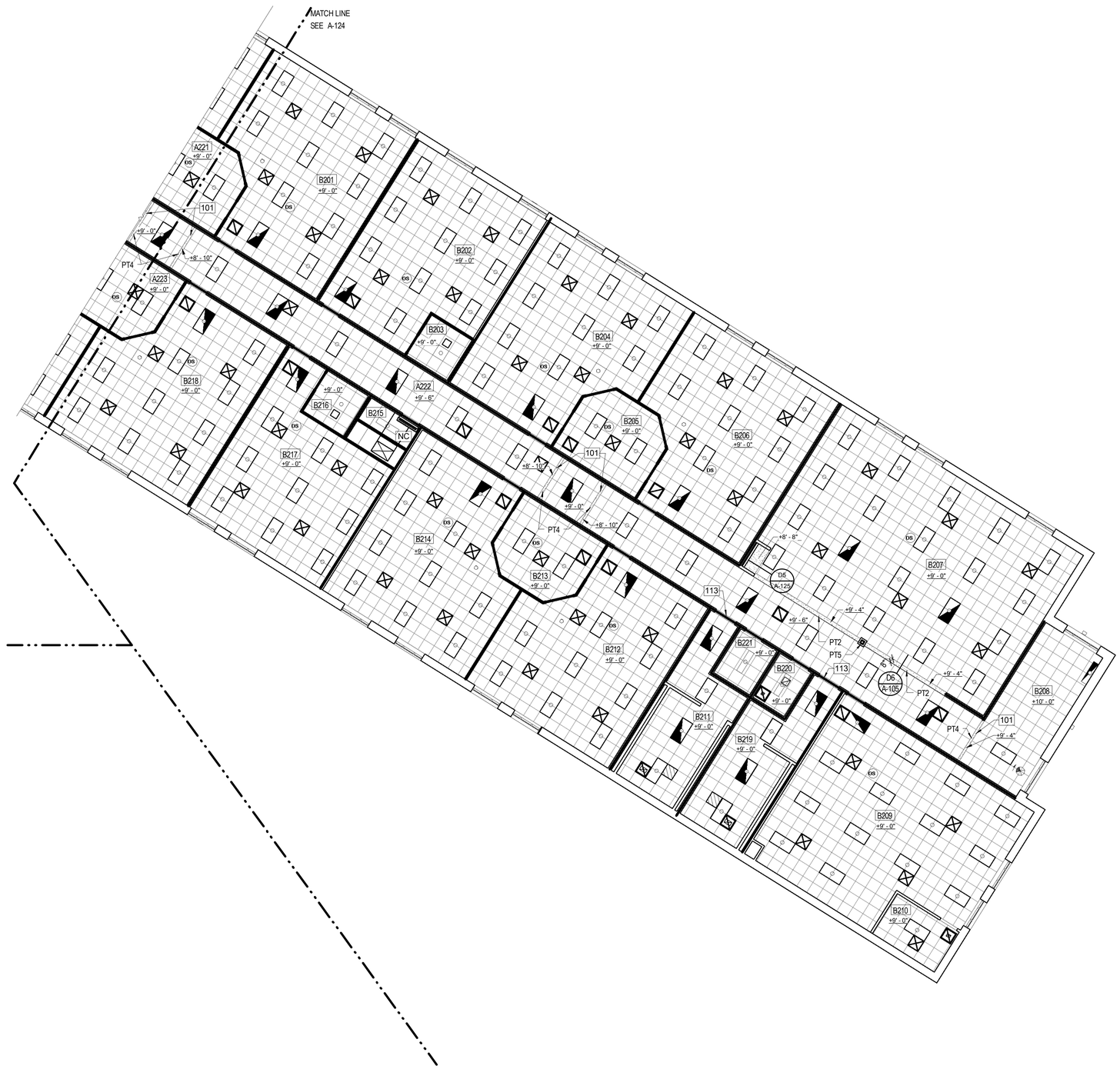

1 A-125 SECOND FLOOR REFLECTED CEILING PLAN - AREA 'B2'
SCALE: 1/8" = 1'-0"

PLAN NORTH

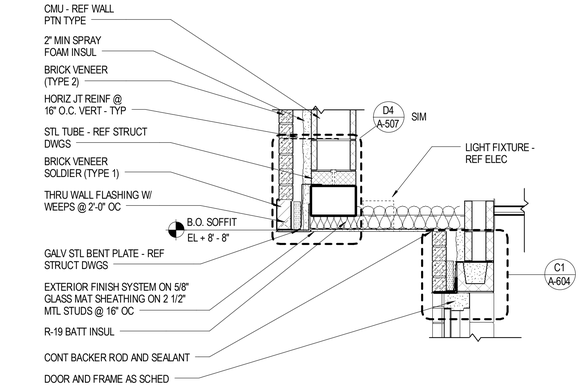

E5 A-125 SOFFIT AT GYM ENT
SCALE: 3/4" = 1'-0"

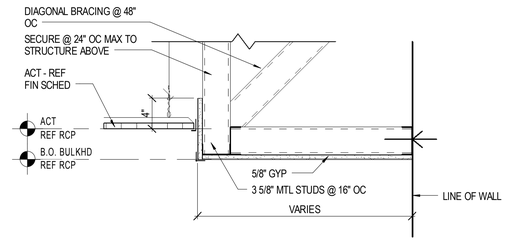

D5 A-125 CEILING DETAIL - TYP SOFFIT DETAIL
SCALE: 1 1/2" = 1'-0"

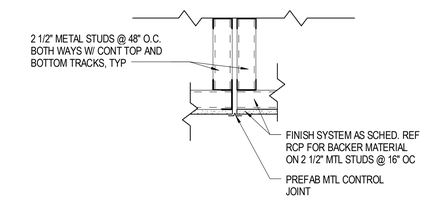

C5 A-125 CEILING DETAIL - SOFFIT CONTROL JOINT
SCALE: 1 1/2" = 1'-0"

KEY NOTES

101 GYP BD SOFFIT - REF B5/A-105

113 OPENING HEAD HEIGHT AT +7'-4" AFF TO B.O.M. - TYPICAL

REF CLG PLAN GENERAL NOTES

REFER TO SHEET A-104.

REFLECTED CEILING PLAN LEGEND

REFER TO SHEET A-104.

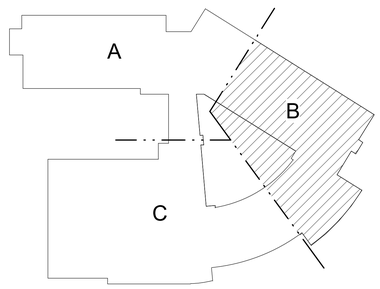

KEY PLAN
NOT TO SCALE

Received by SBBCC 3.2.2015

S.B. Ballard Construction Company

RRMM ARCHITECTS

WALLER TODD & SADLER ARCHITECTS

The Livas Group Architects, P.C.

MARK	DATE	BY	DESCRIPTION
REVISIONS			

DATE	03-03-2015
PROJECT	10105.22
DESIGNED	LRS
DRAWN	HJH
CHECKED	DRJ

COMMONWEALTH OF VIRGINIA
C. DUANE M. HARVER
Lic. No. 6310
03/03/15
ARCHITECT

PROJECT
CITY OF NORFOLK AND NORFOLK PUBLIC SCHOOLS
BROAD CREEK IB ELEMENTARY SCHOOL
NORFOLK, VIRGINIA
SBBCC PROJECT NUMBER: NPS-2014-317
VIRGINIA DEPARTMENT OF EDUCATION: 118-48-00-100

DRAWING
SECOND FLOOR REFLECTED CEILING PLAN - AREA 'B2'

SHEET
A-125

C:\Users\rgosset\Documents\10105-22 Broad Creek Elem School - Central_rgosset.rvt
3/3/2015 5:20:47 PM

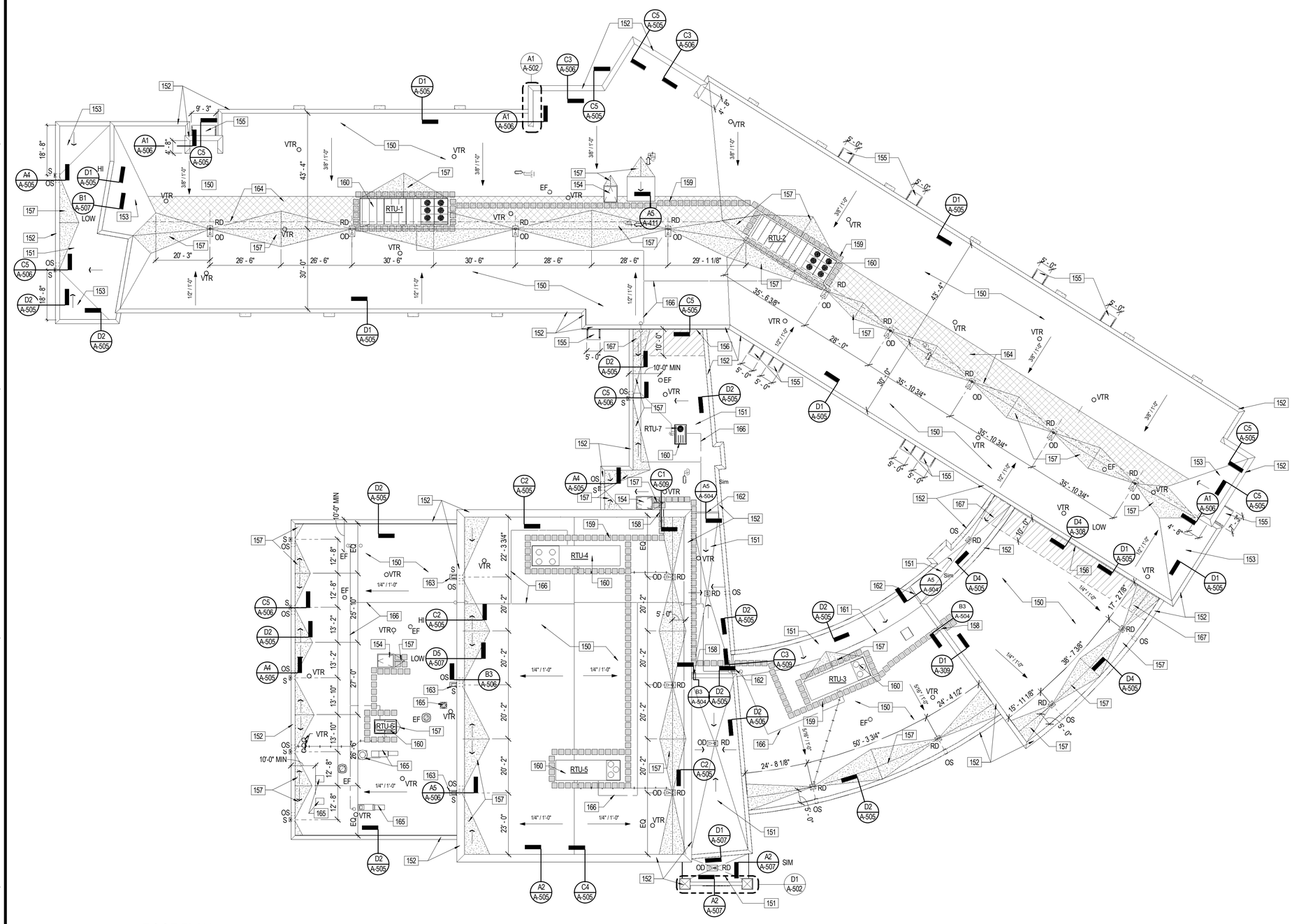

ROOF PLAN

SCALE: 1/16" = 1'-0"

ROOF PLAN LEGEND

RD OD	ROOF DRAIN / OVERFLOW DRAIN - REF DETAILS SHEET A504 AND PLUMBING DWGS FOR ADDITIONAL INFO
RD	ROOF DRAIN - REF DETAILS SHEET A504 AND PLUMBING DWGS FOR ADDITIONAL INFO
OS	OVERFLOW SCUPPER - AT BRICK REF DETAIL A4/ A505 - AT METAL PNL REF DETAIL B3/ A506
S	ROOF SCUPPER, CONDUCTOR HEAD AND DOWNSPOUT - REF DETAILS ON SHEET A-506
EF	MECHANICAL EXHAUST EQUIPMENT (EF)- COORD WITH DETAILS SHEET A504 AND MECHANICAL DRAWINGS
VTR	VENT THROUGH ROOF (VTR) - COORD WITH DETAILS SHEET A504 AND PLUMBING DRAWINGS
	2'-0" X 2'-0" X 1/4" WALKWAY PADS AS SHOWN SPACED 6" APART TYPICAL
	TAPERED ROOF INSULATION SLOPE AS NOTED
X/X : 12	SLOPED ROOF STRUCTURE AS INDICATED
RTU-X	ROOF TOP UNIT- REF. MECHANICAL DRAWINGS
	1/4" PER FOOT MIN TAPERED ROOF INSULATION
	1 HOUR FIRE RATED ROOF / CEILING ASSEMBLY PER UL DESIGN NO. 723.
	ROOF CRICKET - SLOPED 1/2" PER FOOT

ROOF PLAN GENERAL NOTES

A. COORDINATE ALL ROOF WORK WITH ALL OTHER DRAWINGS AND SPECIFICATIONS FOR ALL OTHER ROOF EQUIPMENT AND PENETRATIONS THAT MAY NOT BE REFLECTED ON ROOF PLAN DRAWINGS.

B. FIELD VERIFY EXACT AS-BUILT CONDITIONS AND COORDINATE ALIGNMENT OF ALL ROOF RIDGES, HIPS AND VALLEYS AS INDICATED ON DRAWINGS.

C. FIELD VERIFY AND COORDINATE FINAL LOCATION OF ROOF DRAINS WITH STRUCTURAL AND PME DRAWINGS TO AVOID CONFLICTS.

D. ROOF SYSTEMS MUST COMPLY WITH STANDARDS AND DETAILS AS INDICATED IN THESE DRAWINGS, SPECIFICATIONS AND AS PER NRCA ROOFING AND WATERPROOFING MANUAL - LATEST EDITION.

E. PREFINISHED METAL FLASHING AND TRIM SYSTEMS MUST COMPLY WITH STANDARDS AND DETAILS AS INDICATED IN THESES DRAWINGS, SPECIFICATIONS AND SMACNA ARCHITECTURAL SHEET METAL MANUAL - LATEST EDITION.

F. PROTECT AND MAINTAIN INTEGRITY OF ALL INSTALLED EQUIPMENT AND ROOF SYSTEMS DURING THE ENTIRE DURATION OF CONSTRUCTION

G. PROTECT AND MAINTAIN ROOF DRAINS, RAIN LEADERS, GUTTERS AND DOWNSPOUTS TO ENSURE THEY REMAIN FREE FROM DUST, DIRT AND DEBRIS DURING THE ENTIRE DURATION OF CONSTRUCTION.

H. PROVIDE ONGOING AND FINAL CLEANING OF ALL ROOF EQUIPMENT AND ROOF SYSTEMS, INCLUDING FINAL CLEAN OUT OF ROOF DRAINS, RAIN LEADERS, GUTTERS AND DOWNSPOUTS AT THE END OF THE PROJECT.

J. PROVIDE ONE-PIECE WELDED INSIDE AND OUTSIDE CORNERS OR ALL PRE-FINISHED METAL COPING SYSTEMS.

K. ALL TAPERED INSULATION SHALL BE 1/4 INCH PER FOOT SLOPE, UON

L. REF. MECH. DWGS. FOR TYPICAL ROOF MOUNTED DUCT SUPPORT DETAILS.

x ROOF PLAN KEY NOTES

150 MEMBRANE ROOFING SYSTEM ON COVER BOARD ON MINIMUM 4" RIGID INSULATION.

151 MEMBRANE ROOFING SYSTEM ON COVERBOARD ON ¼" / FOOT TAPERED INSULATION AND MINIMUM 4" BASE LAYER OF ROOF INSULATION ON DEAD LEVEL DECK.

152 PREFINISHED METAL COPING SYSTEM.

153 MEMBRANCE ROOFING SYSTEM ON COVERBOARD ON ¼" / FOOT TAPERED INSULATION AND MINIMUM 4" BASE LAYER OF ROOF INSULATION.

154 ROOF HATCH - REF ROOF DETAIL SHEET A-504.

155 PRE-FABRICATED CANOPY BELOW - N.I.C.

156 BUILDING EXPANSION JOINT.

157 ROOF CRICKET - TAPERED INSULATION SLOPED 1/2" PER FOOT.

158 ROOF TO ROOF LADDER.

159 ROOF WALKWAY PADS SPACED APPROXIMATELY 6" APART.

160 ROOF TOP MECHANICAL UNIT – REF MECHANICAL DRAWINGS AND EQUIPMENT CURB DETAIL ON SHEET A-504

161 LINE INDICATES APPROX LOCATION WHERE SLOPED STRUCTURE TRANSITIONS TO DEAD LEVEL - REF STRUCT DWGS. ROOF INSUL TRANSITIONS TO TAPERED ON 4" BASE LAYER OVER DEAD LEVEL DECK.

162 ROOF INSULATION DIVIDER - REF ROOF DETAIL SHEET A-504.

163 SPLASH BLOCK SET ON 2'X4' ROOF WALK PAD

164 DASHED LINE INDICATES VALLEY OF SLOPED ROOF. HATCHING INDICATES 1/4"/ FOOT TAPERED INSULATION AS REQUIRED TO OFFSET VALLEY TO ROOF DRAIN LINE.

165 KITCHEN ROOF TOP EQUIPMENT - REF FOOD SERVICE DWGS AND EQUIPMENT CURB DETAIL ON SHEET A-504

166 NATURAL GAS LINE - REF PLUMB DWGS.

167 1 HOUR FIRE RESISTANCE RATED ROOF ASSEMBLY PER UL DESIGN NO. P723. PROVIDE MEMBRANE ROOFING SYSTEM ON 1/2" COVERBOARD ON 4" MIN RIGID INSULATION ON METAL DECK.

Received by SBBCC 3.2.2015

S.B. Ballard Construction Company

RRMM ARCHITECTS

WALLER TODD & SADLER ARCHITECTS

The Livas Group Architects, P.C.

MARK	DATE	BY	DESCRIPTION
REVISIONS			

DATE	03-03-2015
PROJECT	10105.22
DESIGNED	LRS
DRAWN	HJH
CHECKED	DRJ

COMMONWEALTH OF VIRGINIA
C. DUANE M. HARVER
Lic. No. 6310
03/03/15
ARCHITECT

SBBCC PROJECT NUMBER: NPS-2014-317
VIRGINIA DEPARTMENT OF EDUCATION 118-48-00-100

PROJECT
CITY OF NORFOLK AND NORFOLK PUBLIC SCHOOLS
BROAD CREEK IB ELEMENTARY SCHOOL
NORFOLK, VIRGINIA

DRAWING
ROOF PLAN

SHEET
A-140

C:\Users\cgossett\Documents\10105.22 Broad Creek Elem School - Central_cgossett.rvt

3/3/2015 5:21:02 PM

E1 A-200 EXTERIOR NORTH ELEVATION
SCALE: 1/16" = 1'-0"

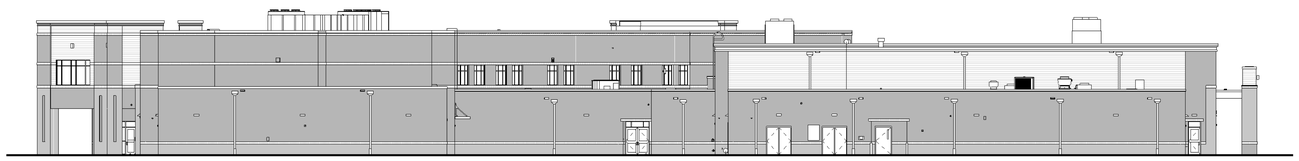

C1 A-200 EXTERIOR WEST ELEVATION
SCALE: 1/16" = 1'-0"

B1 A-200 EXTERIOR SOUTH ELEVATION
SCALE: 1/16" = 1'-0"

A1 A-200 EXTERIOR EAST ELEVATION
SCALE: 1/16" = 1'-0"

NOTE:
THIS SHEET IS FOR REFERENCE ONLY. REFER TO EXTERIOR ELEVATIONS ON SHEETS A-201, A-202, & A-203 FOR NOTES, SECTION CUTS, ETC.

Received by SBBCC 3.2.2015

S.B. Ballard
Construction Company

RRMM ARCHITECTS

WALLER TODD & SADLER ARCHITECTS

The Livas Group Architects, P.C.

MARK	DATE	BY	DESCRIPTION

REVISIONS

DATE	03-03-2015
PROJECT	10105.22
DESIGNED	LRS
DRAWN	HJH
CHECKED	DRJ

COMMONWEALTH OF VIRGINIA
DUANE M. HARVER
Lic. No. 6310
03/03/15
ARCHITECT

PROJECT
CITY OF NORFOLK AND NORFOLK PUBLIC SCHOOLS
BROAD CREEK IB ELEMENTARY SCHOOL
NORFOLK, VIRGINIA

SBBCC PROJECT NUMBER: NPS-2014-317
VIRGINIA DEPARTMENT OF EDUCATION: 118-46-00-100

DRAWING
EXTERIOR OVERALL ELEVATIONS

SHEET
A-200

C:\Users\rgossett\Documents\10105-22 Broad Creek Elem School - Central_rgossett.rvt
3/3/2015 7:00:56 PM

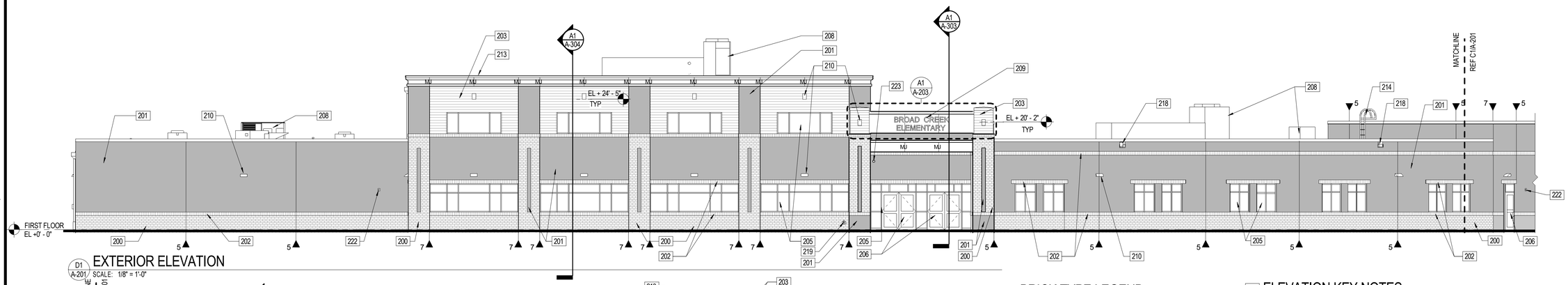

D1 A-201 EXTERIOR ELEVATION
SCALE: 1/8" = 1'-0"

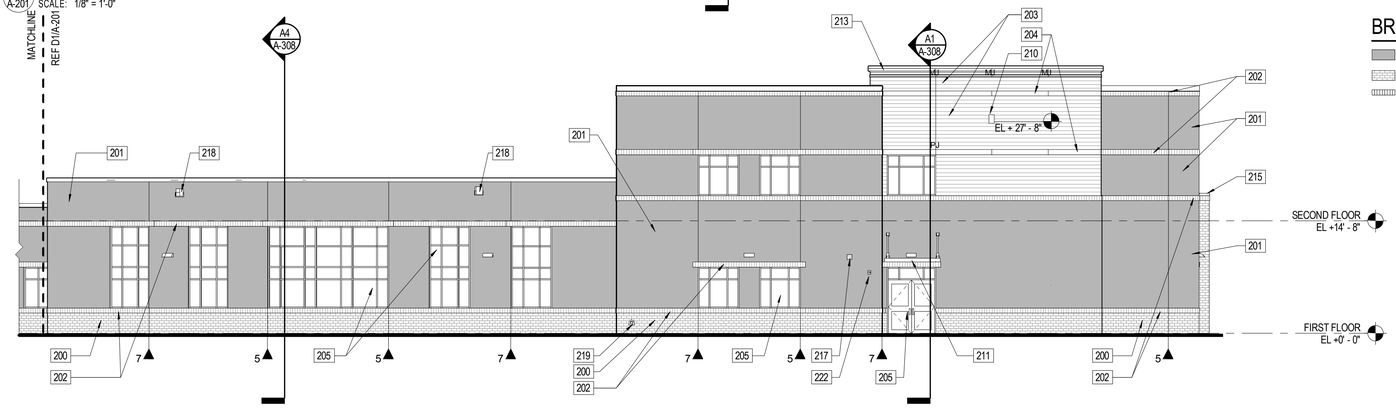

C1 A-201 EXTERIOR ELEVATION
SCALE: 1/8" = 1'-0"

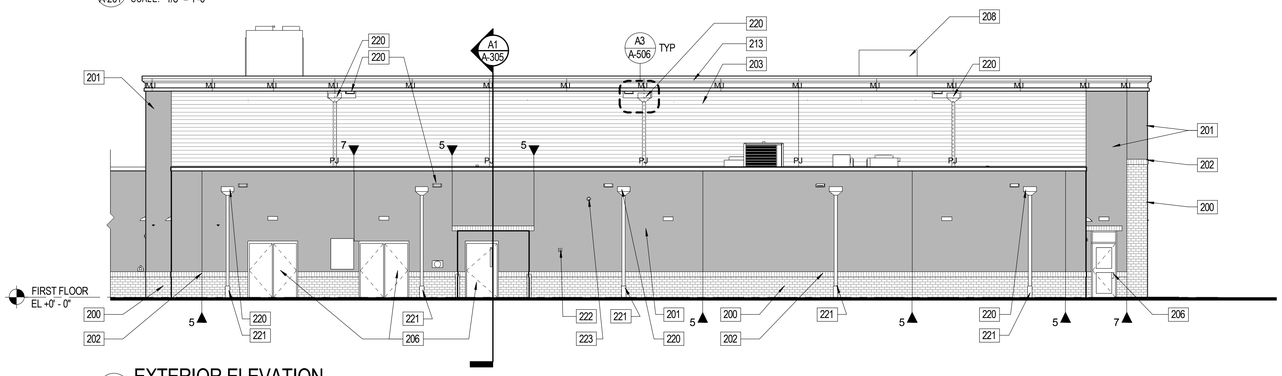

B1 A-201 EXTERIOR ELEVATION
SCALE: 1/8" = 1'-0"

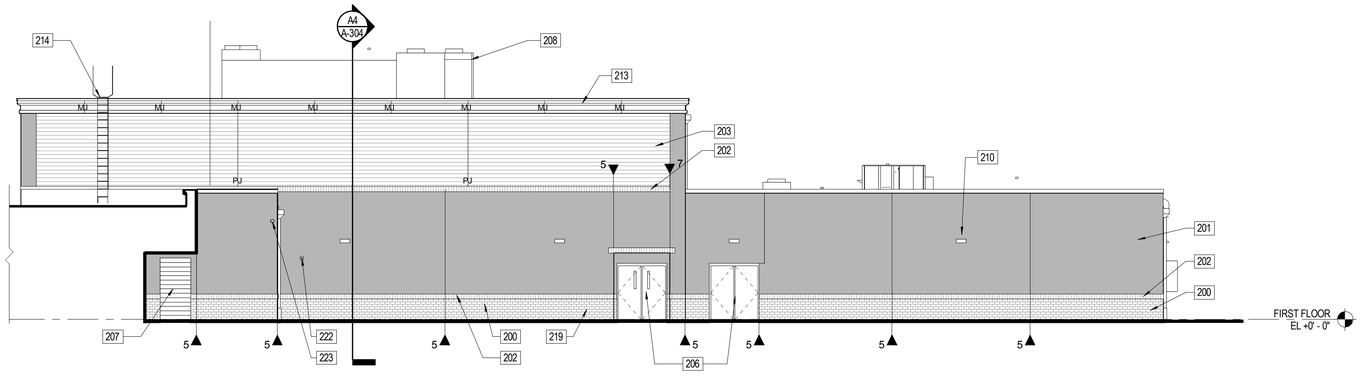

A1 A-201 EXTERIOR ELEVATION
SCALE: 1/8" = 1'-0"

BRICK TYPE LEGEND

- FACE BRICK, TYPE 2
- FACE BRICK, TYPE 1
- FACE BRICK, TYPE 1 (SOLDIER COURSE)

ELEVATION KEY NOTES (APPLIES TO SHEETS A-201 THRU A-203)

200 BRICK TYPE 1 - REF BRICK TYPE LEGEND

201 BRICK TYPE 2 - REF BRICK TYPE LEGEND

202 BRICK TYPE 1 SOLDIER COURSE - REF BRICK TYPE LEGEND

203 CORRUGATED METAL WALL PANEL SYSTEM - LOCATE PANEL JOINTS (PJ) AS SHOWN AND 30'-0" OC MAX

204 PREFINISHED BREAK METAL TRIM - LOCATE JOINTS TO ALIGN WITH FASCIA BREAK METAL JOINTS (MJ) AT LOCATIONS INDICATED ABOVE TRIM

205 PREFIN ALUM STOREFRONT WITH 1" INSULATED GLAZING

206 DOOR AND FRAME AS SCHEDULED

207 INSULATED OVERHEAD COILING DOOR

208 MECH ROOF TOP UNIT

209 RAISED ALUMINUM LETTERING

210 WALL MOUNTED LIGHT FIXTURE - REF ELECTRICAL DWGS

211 PREFAB CANOPY - N.I.C.

212 BUILDING EXPANSION JOINT

213 PREFINISHED BREAK METAL FASCIA AND SOFFIT - LOCATE BREAK METAL JOINTS (MJ) AS SHOWN AND 10'-0" OC MAX

214 PAINTED GALVANIZED STEEL LADDER

215 ARCHITECTURAL PRECAST CAP-(TOTAL OF 14 LOCATIONS) - REF DTL D3/A-502

216 PREFINISHED EXHAUST LOUVER- REF MECH DWGS

217 PREFINISHED BRICK VENT - REF MECH DWGS

218 ROOF OVERFLOW SCUPPER - REF ROOF PLAN

219 OVERFLOW ROOF DRAIN OUTFALL - REF PLUMBING DRAWINGS

220 PREFIN ALUMINUM ROOF SCUPPER, CONDUCTOR HEAD AND DOWNSPOUT

221 CAST IRON DOWNSPOUT BOOT - REF CIVIL DRAWINGS

222 FIRE ALARM HORN SPEAKER, COORD EXACT LOCATION IN FIELD - REF ELEC. DWGS

223 SECURITY CAMERA - REF ELEC. DWGS

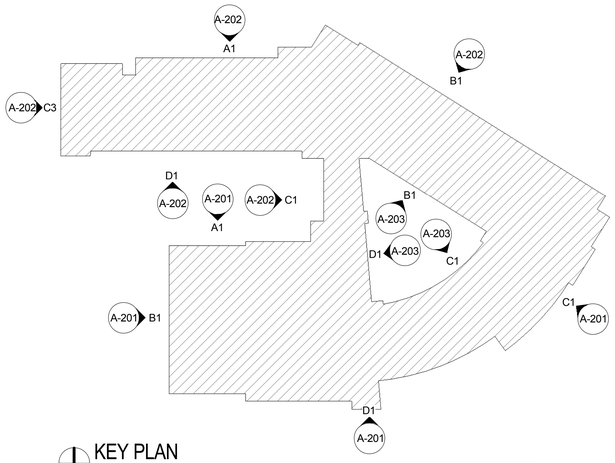

KEY PLAN
SCALE: 1" = 50'-0"
PLAN NORTH

Received by SBBCC 3.2.2015

S.B. Ballard Construction Company
RRMM ARCHITECTS
WALLER TODD & SADLER ARCHITECTS
The Livas Group Architects, P.C.

MARK	DATE	BY	DESCRIPTION
REVISIONS			

DATE	03-03-2015
PROJECT	10105.22
DESIGNED	LRS
DRAWN	HJH
CHECKED	DRJ

COMMONWEALTH OF VIRGINIA
C. DUANE M. HARVER
Lic. No. 6310
03/03/15
ARCHITECT

PROJECT
CITY OF NORFOLK AND NORFOLK PUBLIC SCHOOLS
BROAD CREEK IB ELEMENTARY SCHOOL
NORFOLK, VIRGINIA
SBBCC PROJECT NUMBER: NPS-2014-317
VIRGINIA DEPARTMENT OF EDUCATION: 118-46-00-100

DRAWING
EXTERIOR ELEVATIONS

SHEET
A-201

C:\Users\cgossett\Documents\10105-22 Broad Creek Elem School - Central_cgossett.rvt
3/3/2015 7:01:13 PM

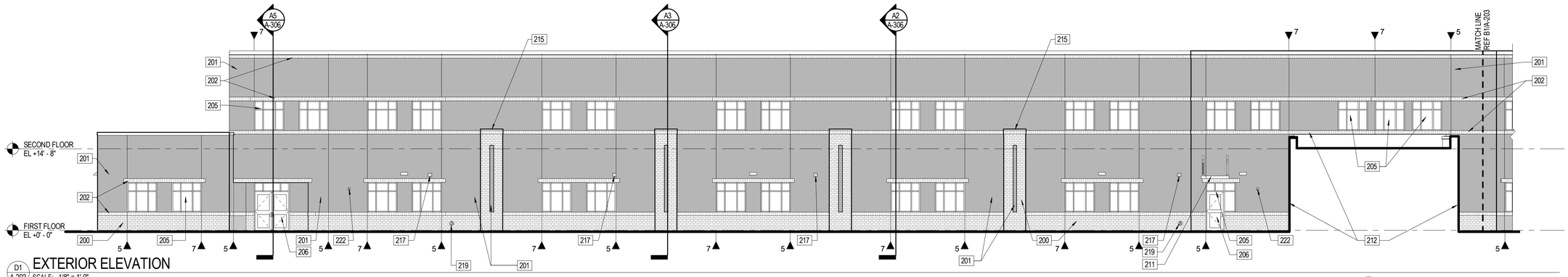

D1 A-202 EXTERIOR ELEVATION
SCALE: 1/8" = 1'-0"

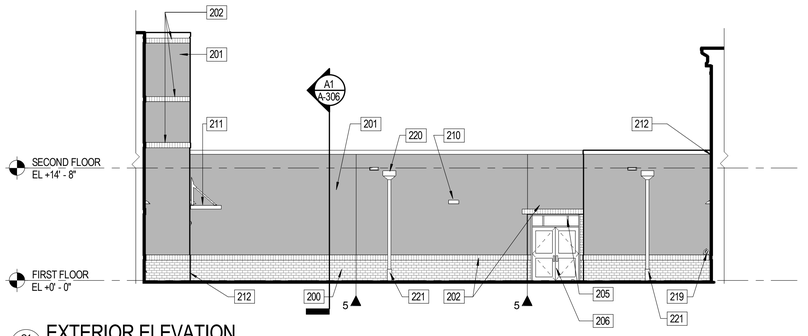

C1 A-202 EXTERIOR ELEVATION
SCALE: 1/8" = 1'-0"

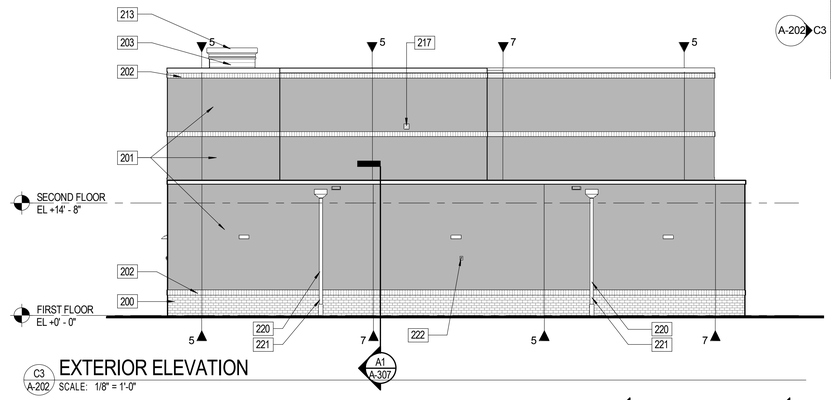

C3 A-202 EXTERIOR ELEVATION
SCALE: 1/8" = 1'-0"

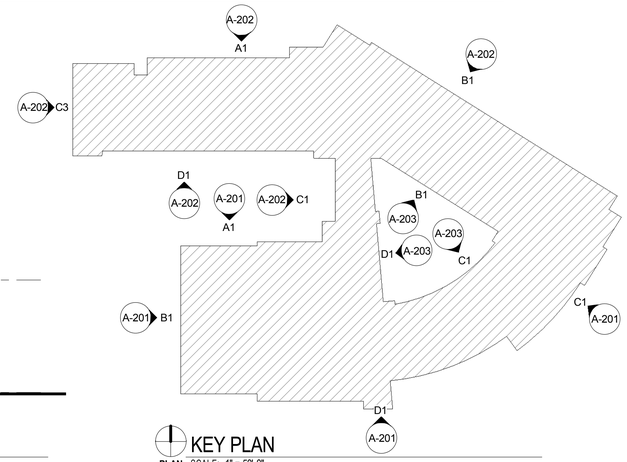

KEY PLAN
PLAN NORTH SCALE: 1" = 50'-0"

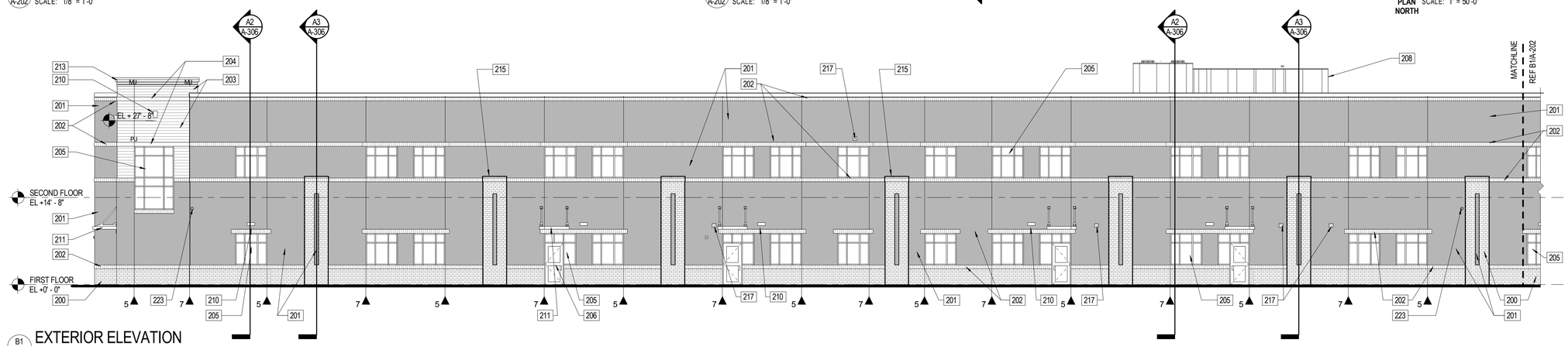

B1 A-202 EXTERIOR ELEVATION
SCALE: 1/8" = 1'-0"

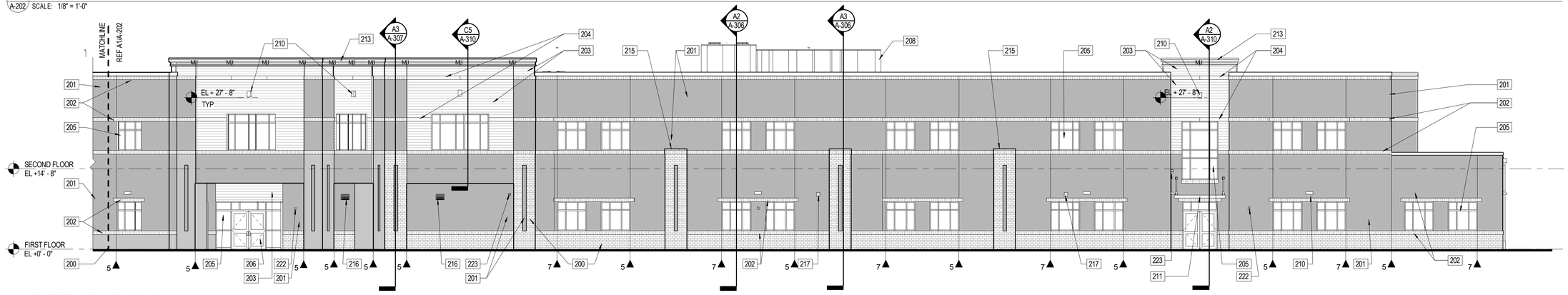

A1 A-202 EXTERIOR ELEVATION
SCALE: 1/8" = 1'-0"

BRICK TYPE LEGEND

- FACE BRICK, TYPE 2
- FACE BRICK, TYPE 1
- FACE BRICK, TYPE 1 (SOLDIER COURSE)

ELEVATION KEY NOTES

REFER TO SHEET A-201

Received by SBBCC 3.2.2015

S.B. Ballard Construction Company

RRMM ARCHITECTS

WALLER TODD & SADLER ARCHITECTS

The Livas Group Architects, P.C.

MARK	DATE	REVISIONS	BY	DESCRIPTION

DATE	03-03-2015
PROJECT	10105.22
DESIGNED	LRS
DRAWN	HJH
CHECKED	DRJ

COMMONWEALTH OF VIRGINIA
C. DUANE M. HARVER
Lic. No. 6310
03/03/15
ARCHITECT

PROJECT
CITY OF NORFOLK AND NORFOLK PUBLIC SCHOOLS
BROAD CREEK IB ELEMENTARY SCHOOL
NORFOLK, VIRGINIA

SBBCC PROJECT NUMBER: NFS-2014-317
VIRGINIA DEPARTMENT OF EDUCATION: 118-48-00-100

DRAWING
EXTERIOR ELEVATIONS

SHEET
A-202

C:\Users\rsgossett\Documents\10105-22 Broad Creek Elem School - Central_rgossett.rvt
3/3/2015 7:01:34 PM

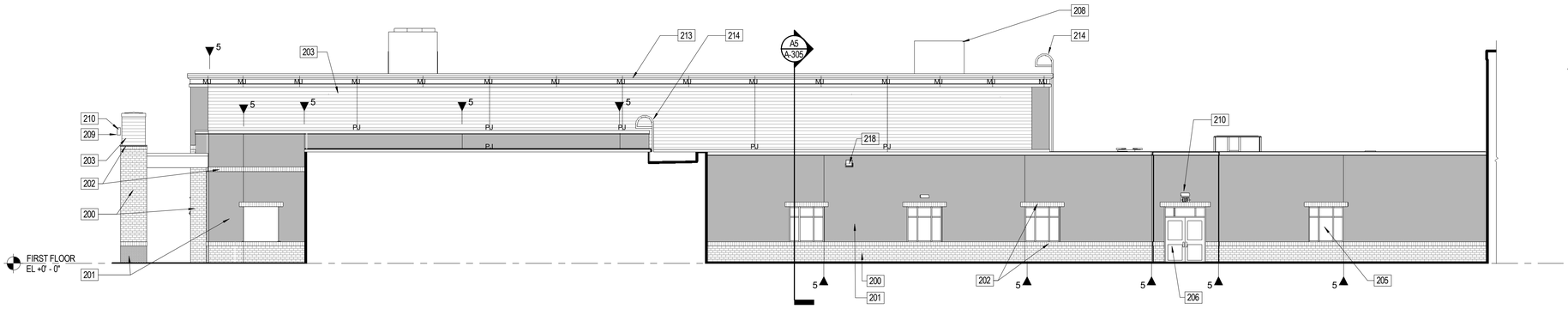

D1 A-203 COURTYARD WEST ELEVATION
SCALE: 1/8" = 1'-0"

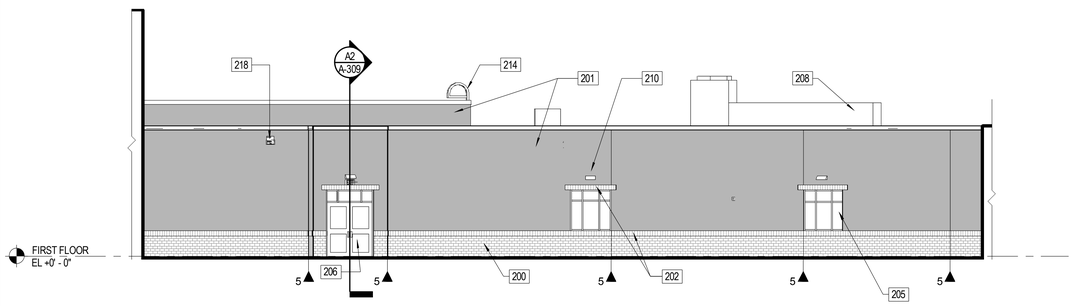

C1 A-203 COURTYARD SOUTH ELEVATION
SCALE: 1/8" = 1'-0"

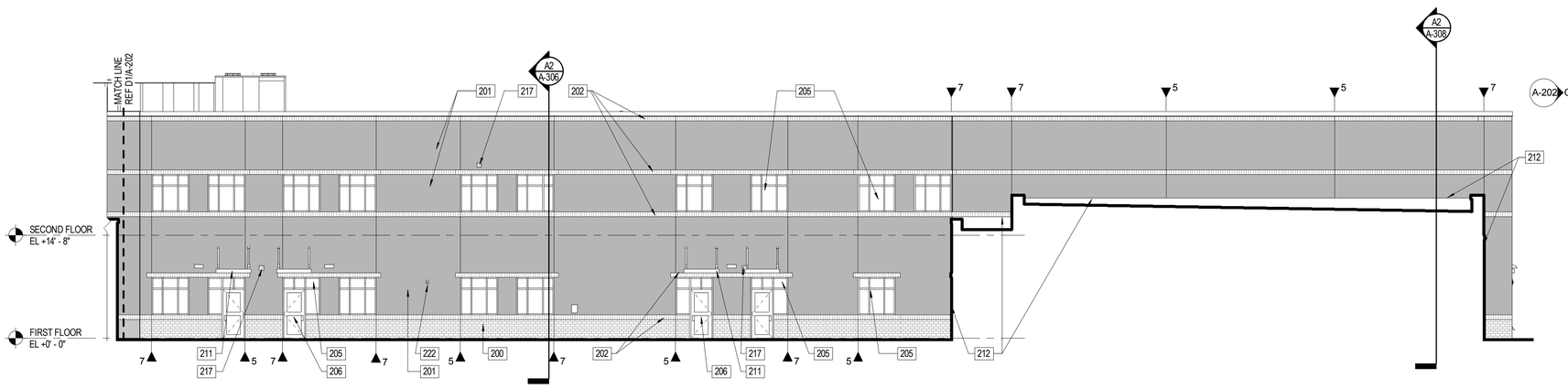

B1 A-203 COURTYARD EAST ELEVATION
SCALE: 1/8" = 1'-0"

BRICK TYPE LEGEND

- FACE BRICK, TYPE 2
- FACE BRICK, TYPE 1
- FACE BRICK, TYPE 1 (SOLDIER COURSE)

ELEVATION KEY NOTES (APPLIES TO SHEETS A-201 THRU A-203)

200	BRICK TYPE 1 - REF BRICK TYPE LEGEND
201	BRICK TYPE 2 - REF BRICK TYPE LEGEND
202	BRICK TYPE 1 SOLDIER COURSE - REF BRICK TYPE LEGEND
203	CORRUGATED METAL WALL PANEL SYSTEM - LOCATE PANEL JOINTS (PJ) AS SHOWN AND 30'-0" OC MAX
204	PREFINISHED BREAK METAL TRIM - LOCATE JOINTS TO ALIGN WITH FASCIA BREAK METAL JOINTS (MJ) AT LOCATIONS INDICATED ABOVE TRIM
205	PREFIN ALUM STOREFRONT WITH 1" INSULATED GLAZING
206	DOOR AND FRAME AS SCHEDULED
207	INSULATED OVERHEAD COILING DOOR
208	MECH ROOF TOP UNIT
209	RAISED ALUMINUM LETTERING
210	WALL MOUNTED LIGHT FIXTURE - REF ELECTRICAL DWGS
211	PREFAB CANOPY - N.I.C.
212	BUILDING EXPANSION JOINT
213	PREFINISHED BREAK METAL FASCIA AND SOFFIT - LOCATE BREAK METAL JOINTS (MJ) AS SHOWN AND 10'-0" OC MAX
214	PAINTED GALVANIZED STEEL LADDER
215	ARCHITECTURAL PRECAST CAP-(TOTAL OF 14 LOCATIONS) - REF DTL D3/A-502
216	PREFINISHED EXHAUST LOUVER- REF MECH DWGS
217	PREFINISHED BRICK VENT - REF MECH DWGS
218	ROOF OVERFLOW SCUPPER - REF ROOF PLAN
219	OVERFLOW ROOF DRAIN OUTFALL - REF PLUMBING DRAWINGS
220	PREFIN ALUMINUM ROOF SCUPPER, CONDUCTOR HEAD AND DOWNSPOUT
221	CAST IRON DOWNSPOUT BOOT - REF CIVIL DRAWINGS
222	FIRE ALARM HORN SPEAKER, COORD EXACT LOCATION IN FIELD - REF ELEC. DWGS
223	SECURITY CAMERA - REF ELEC. DWGS

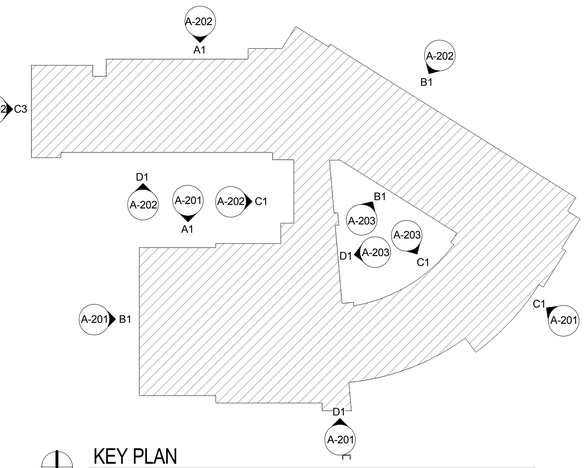

KEY PLAN
SCALE: 1" = 50'-0"

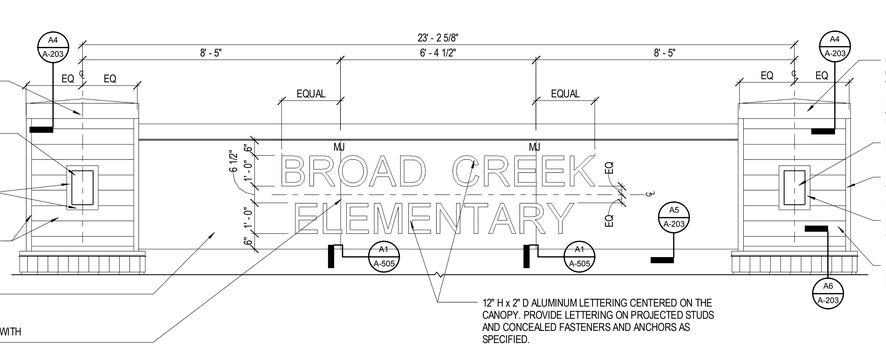

A1 A-203 BUILDING SIGNAGE
SCALE: 1/2" = 1'-0"

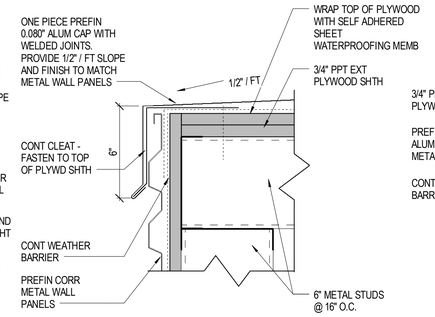

A4 A-203 DETAIL
SCALE: 3" = 1'-0"

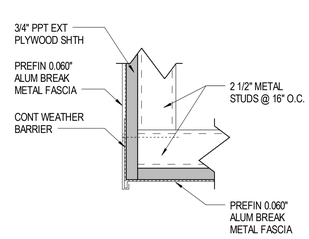

A5 A-203 DETAIL
SCALE: 3" = 1'-0"

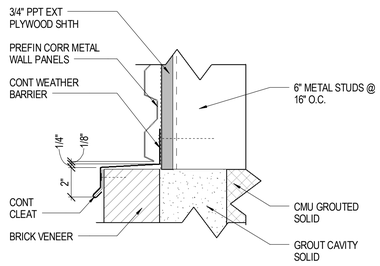

A6 A-203 DETAIL
SCALE: 3" = 1'-0"

Received by SBBCC 3.2.2015

S.B. Ballard Construction Company
RRMM ARCHITECTS
WALLER TODD & SADLER ARCHITECTS
The Livas Group Architects, P.C.

MARK	DATE	BY	DESCRIPTION
REVISIONS			

DATE	03-03-2015
PROJECT	10105.22
DESIGNED	LRS
DRAWN	HJH
CHECKED	DRJ

COMMONWEALTH OF VIRGINIA
DUANE M. HARVER
Lic. No. 6310
03/03/15
ARCHITECT

SBBCC PROJECT NUMBER: NPS-2014-317
VIRGINIA DEPARTMENT OF EDUCATION: 118-46-00-100

PROJECT
CITY OF NORFOLK AND NORFOLK PUBLIC SCHOOLS
BROAD CREEK IB ELEMENTARY SCHOOL
NORFOLK, VIRGINIA

DRAWING
EXTERIOR COURTYARD ELEVATIONS

SHEET
A-203

C:\Users\rgossett\Documents\10105-22 Broad Creek Elem School - Central_cgossett.rvt
3/3/2015 7:01:50 PM

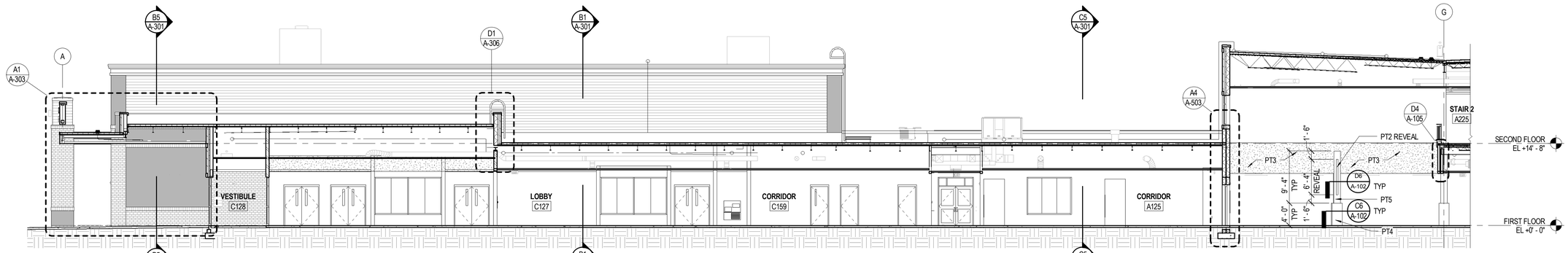

D1 A-301 BUILDING SECTION
SCALE: 1/8" = 1'-0"

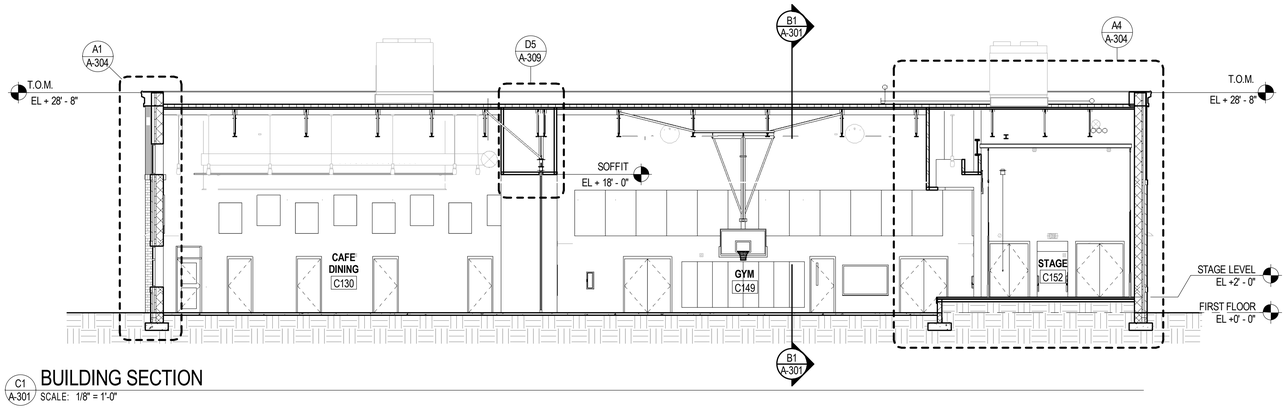

C1 A-301 BUILDING SECTION
SCALE: 1/8" = 1'-0"

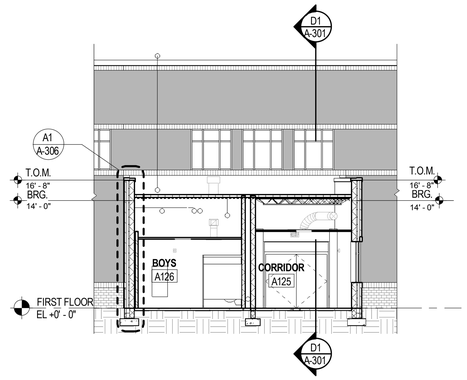

C5 A-301 BUILDING SECTION
SCALE: 1/8" = 1'-0"

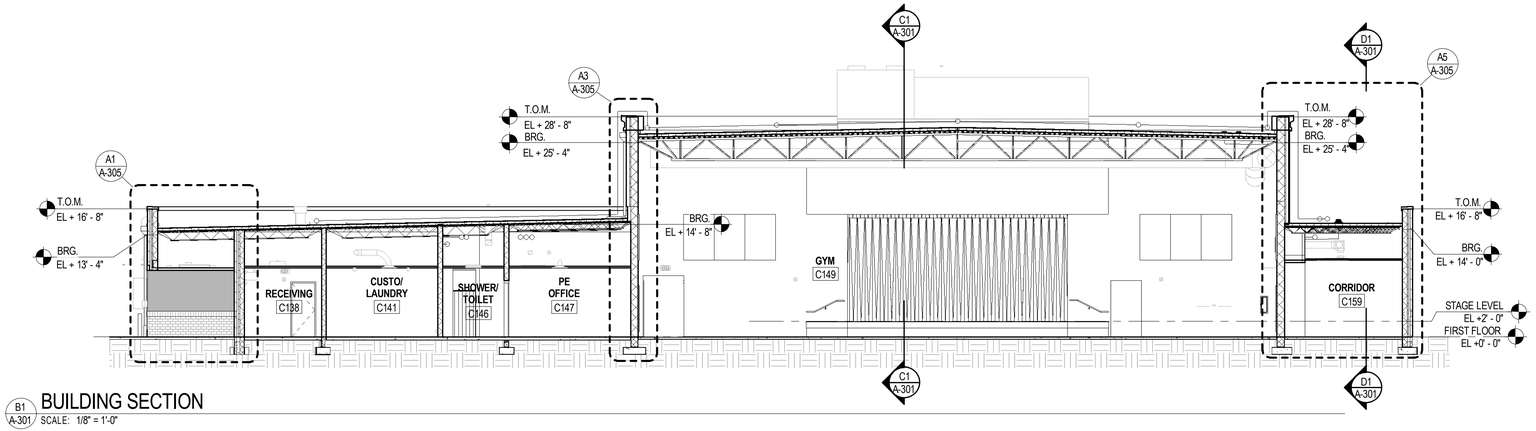

B1 A-301 BUILDING SECTION
SCALE: 1/8" = 1'-0"

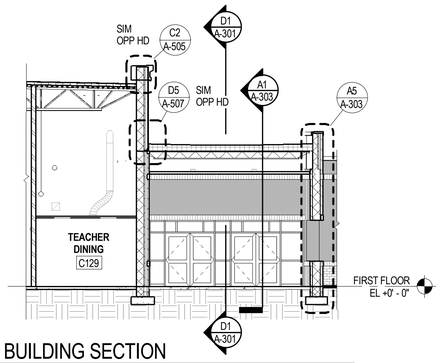

B5 A-301 BUILDING SECTION
SCALE: 1/8" = 1'-0"

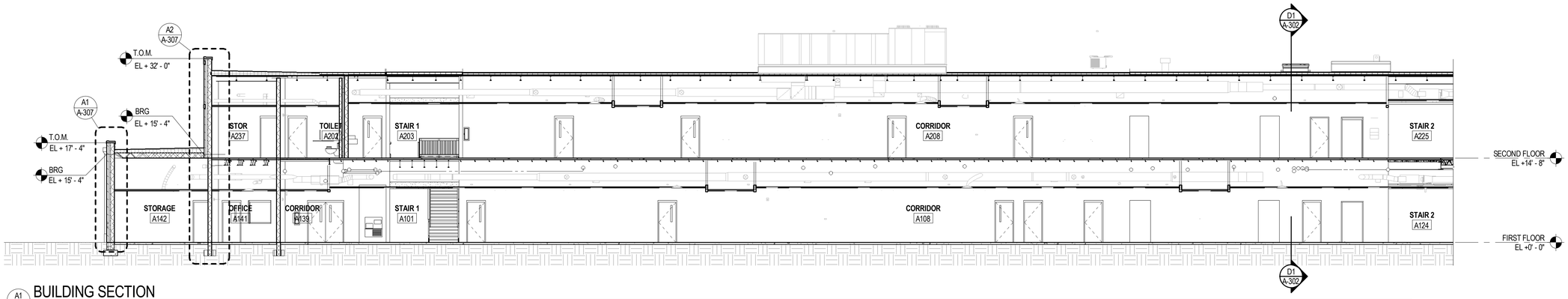

A1 A-301 BUILDING SECTION
SCALE: 1/8" = 1'-0"

Received by SBBCC 3.2.2015

S.B. Ballard Construction Company
RRMM ARCHITECTS
WALLER TODD & SADLER ARCHITECTS
The Livas Group Architects, P.C.

MARK	DATE	BY	DESCRIPTION
REVISIONS			

DATE	03-03-2015
PROJECT	10105.22
DESIGNED	LRS
DRAWN	HJH
CHECKED	DRJ

COMMONWEALTH OF VIRGINIA
DUANE M. HARVER
Lic. No. 6310
03/03/15
ARCHITECT

SBBCC PROJECT NUMBER: NPS-2014-317
VIRGINIA DEPARTMENT OF EDUCATION: 118-46-00-100

PROJECT
CITY OF NORFOLK AND NORFOLK PUBLIC SCHOOLS
BROAD CREEK IB ELEMENTARY SCHOOL
NORFOLK, VIRGINIA

DRAWING
BUILDING SECTIONS

SHEET
A-301

C:\Users\rgossett\Documents\10105-22 Broad Creek Elem School - Central_rgossett.rvt
3/3/2015 5:34:14 PM

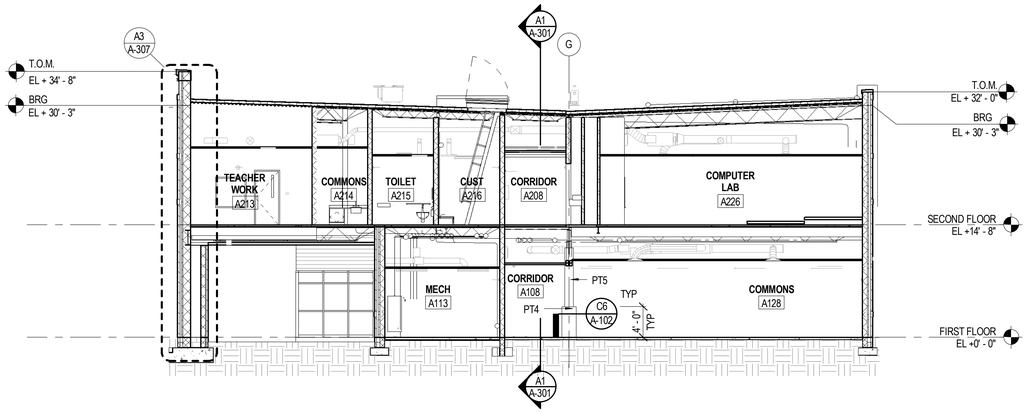

D1 A-302 BUILDING SECTION
SCALE: 1/8" = 1'-0"

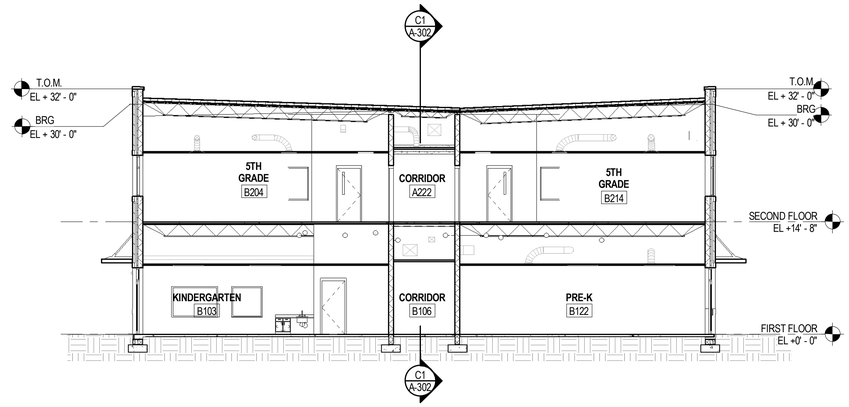

D4 A-302 BUILDING SECTION
SCALE: 1/8" = 1'-0"

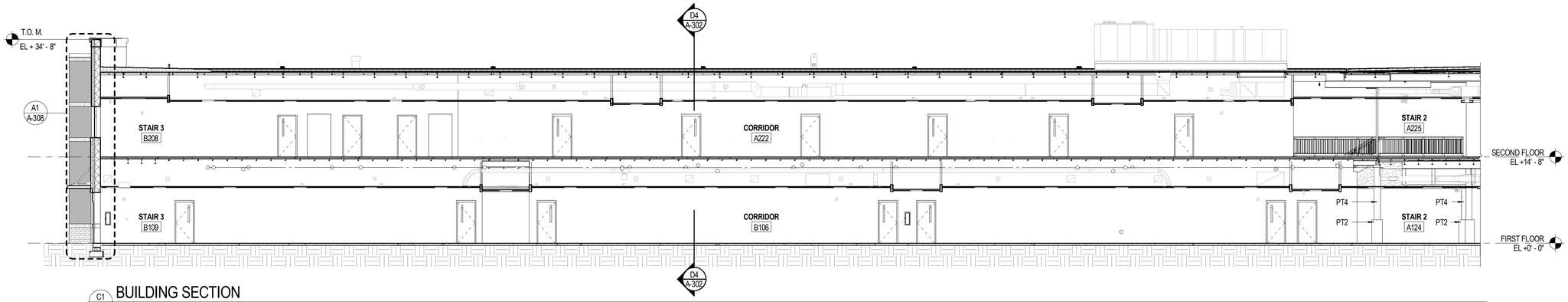

C1 A-302 BUILDING SECTION
SCALE: 1/8" = 1'-0"

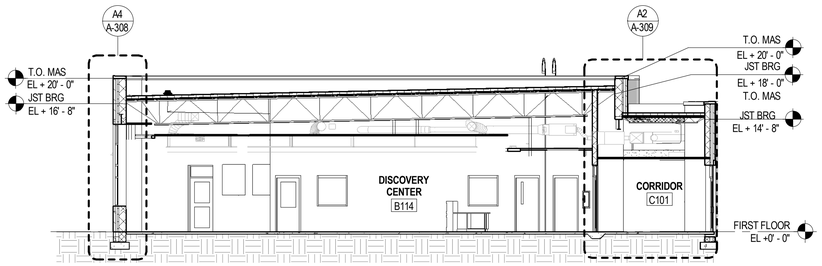

B1 A-302 BUILDING SECTION
SCALE: 1/8" = 1'-0"

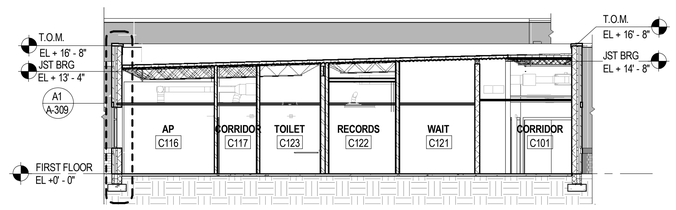

B4 A-302 BUILDING SECTION
SCALE: 1/8" = 1'-0"

Received by SBBCC 3.2.2015

S.B. Ballard
Construction Company

RRMM ARCHITECTS

WALLER TODD & SADLER ARCHITECTS

The Livas Group Architects, P.C.

MARK	DATE	DESCRIPTION	BY
REVISIONS			

DATE	03-03-2015
PROJECT	10105.22
DESIGNED	LRS
DRAWN	HJH
CHECKED	DRJ

COMMONWEALTH OF VIRGINIA
C. DUANE M. HARVER
Lic. No. 6310
03/03/15
ARCHITECT

PROJECT
CITY OF NORFOLK AND NORFOLK PUBLIC SCHOOLS
BROAD CREEK IB ELEMENTARY SCHOOL
NORFOLK, VIRGINIA

SBBCC PROJECT NUMBER: NPS-2014-317
VIRGINIA DEPARTMENT OF EDUCATION: 118-48-00-100

DRAWING
BUILDING SECTIONS

SHEET
A-302

C:\Users\cgossett\Documents\10105-22 Broad Creek Elem School - Central_cgossett.rvt
3/3/2015 5:34:28 PM

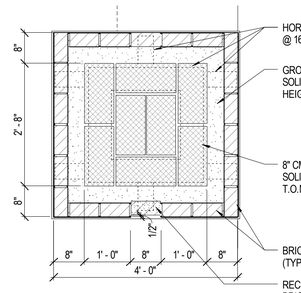

E1 A-303 PLAN DETAIL
SCALE: 3/4" = 1'-0"

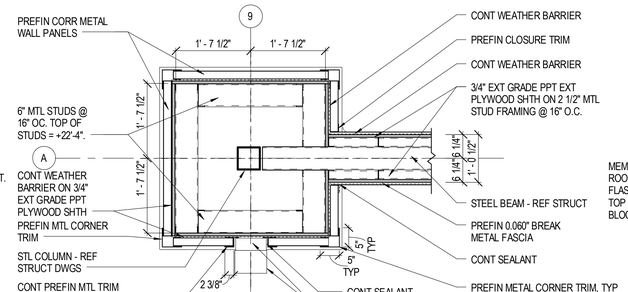

E2 A-303 DETAIL
SCALE: 3/4" = 1'-0"

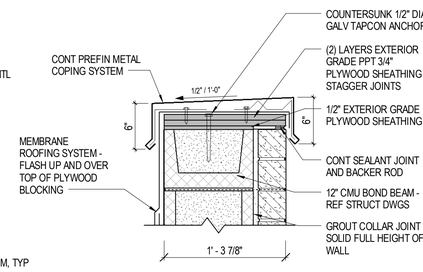

E3 A-303 DETAIL
SCALE: 1 1/2" = 1'-0"

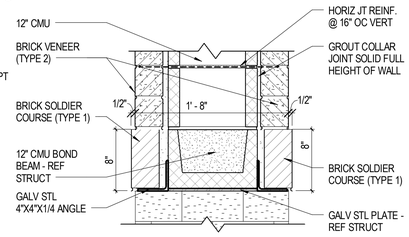

E4 A-303 DETAIL
SCALE: 1 1/2" = 1'-0"

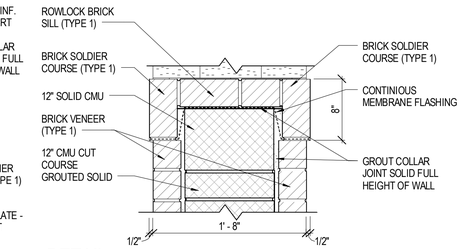

E5 A-303 DETAIL
SCALE: 1 1/2" = 1'-0"

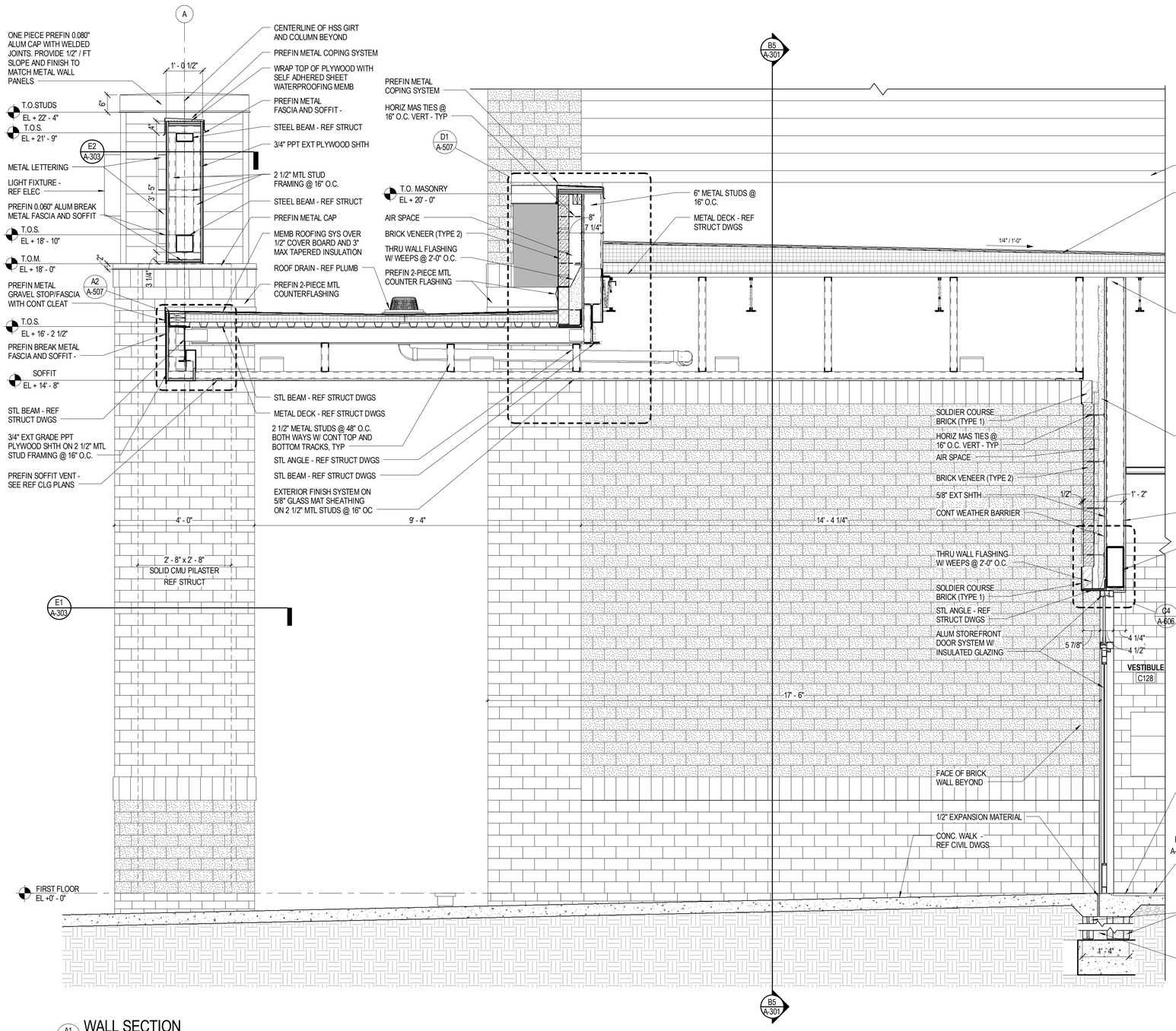

A1 A-303 WALL SECTION
SCALE: 3/4" = 1'-0"

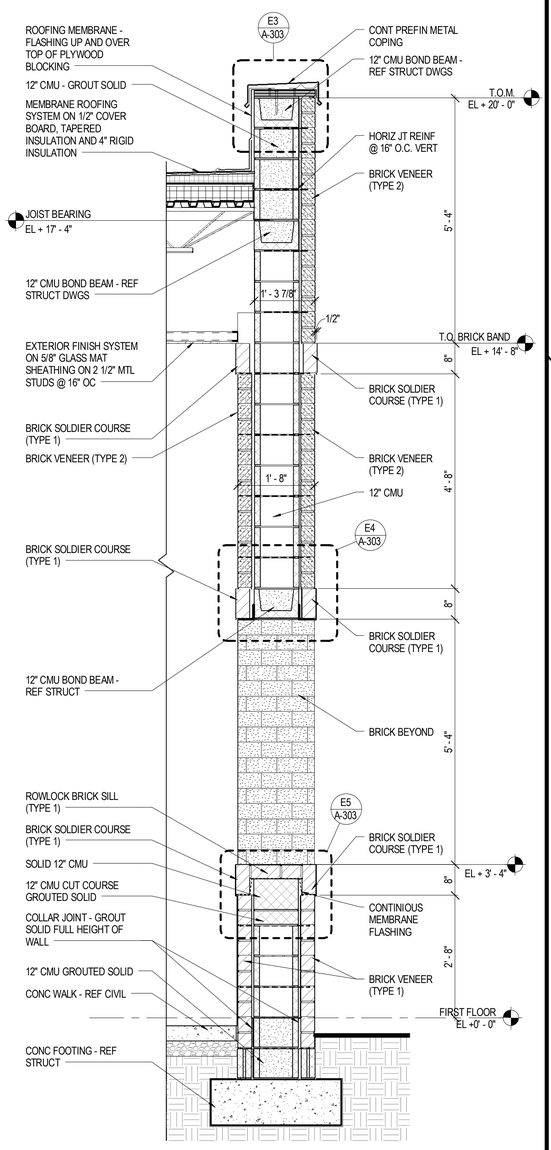

A5 A-303 WALL SECTION
SCALE: 3/4" = 1'-0"

Received by SBBCC 3.2.2015

S.B. Ballard Construction Company

RRMM ARCHITECTS

WALLER TODD & SADLER ARCHITECTS

The Livas Group Architects, P.C.

MARK	DATE	BY	DESCRIPTION

REVISIONS

DATE	03-03-2015
PROJECT	10105.22
DESIGNED	LRS
DRAWN	HJH
CHECKED	DRJ

COMMONWEALTH OF VIRGINIA
C. DUANE M. HARVER
Lic. No. 6310
03/03/15
ARCHITECT

SBBCC PROJECT NUMBER NFS-2014-317
VIRGINIA DEPARTMENT OF EDUCATION 118-48-00-100

PROJECT
CITY OF NORFOLK AND NORFOLK PUBLIC SCHOOLS
BROAD CREEK IB ELEMENTARY SCHOOL
NORFOLK, VIRGINIA

DRAWING
WALL SECTIONS

SHEET
A-303

C:\Users\rgossett\Documents\10105-22 Broad Creek Elem School - Central_rgossett.rvt

3/3/2015 5:34:38 PM

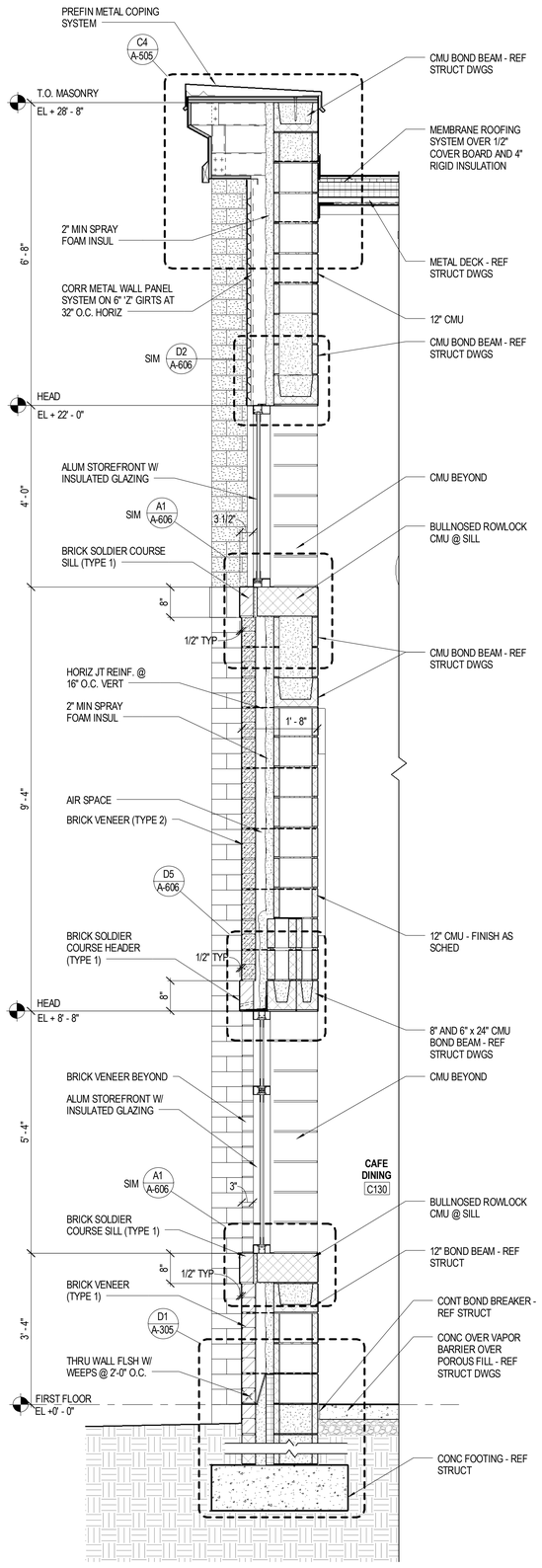

A1 A-304 WALL SECTION
SCALE: 3/4" = 1'-0"

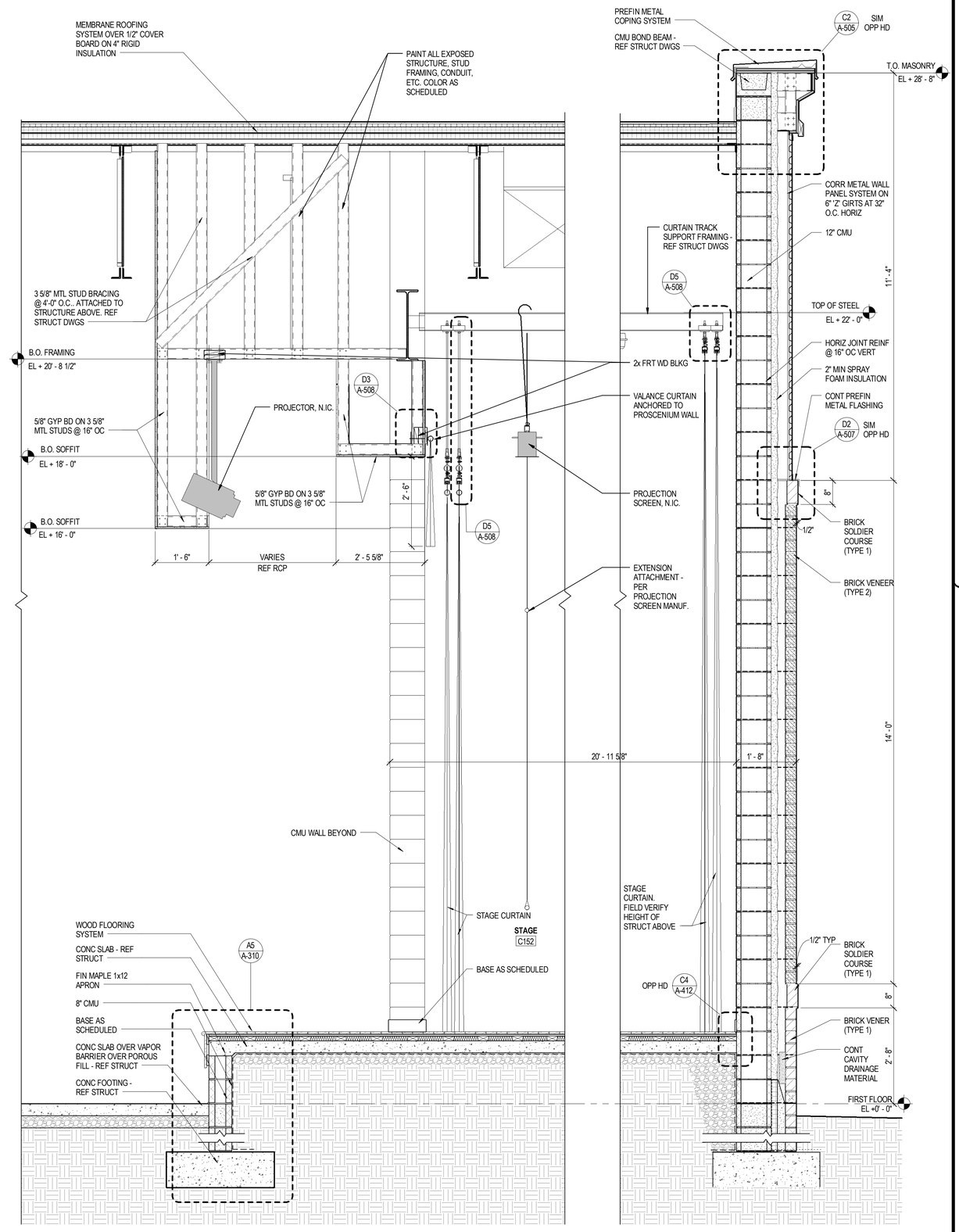

A4 A-304 WALL SECTION
SCALE: 3/4" = 1'-0"

Received by SBBCC 3.2.2015

S.B. Ballard Construction Company

RRMM ARCHITECTS

WALLER TODD & SADLER ARCHITECTS

The Livas Group Architects, P.C.

MARK	DATE	DESCRIPTION

REVISIONS

DATE	03-03-2015	
PROJECT	10105.22	
DESIGNED	LRS	BY
DRAWN	HJH	
CHECKED	DRJ	

COMMONWEALTH OF VIRGINIA
DUANE M. HARVER
Lic. No. 6310
03/03/15
ARCHITECT

SBBCC PROJECT NUMBER NPS-2014-317
VIRGINIA DEPARTMENT OF EDUCATION 118-48-00-100

PROJECT
CITY OF NORFOLK AND NORFOLK PUBLIC SCHOOLS
BROAD CREEK IB ELEMENTARY SCHOOL
NORFOLK, VIRGINIA

DRAWING
WALL SECTIONS

SHEET
A-304

C:\Users\rgossett\Documents\10105-22 Broad Creek Elem School - Central_rgossett.rvt

3/3/2015 5:34:47 PM

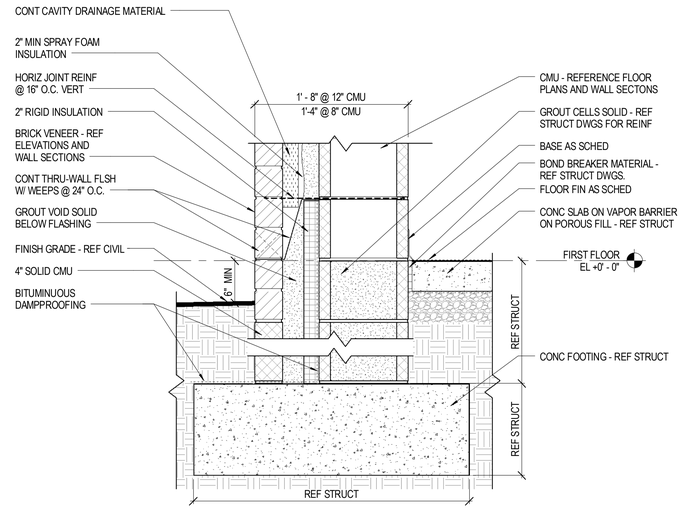

D1 / A-305 TYPICAL FOUNDATION DETAIL
SCALE: 1 1/2" = 1'-0"

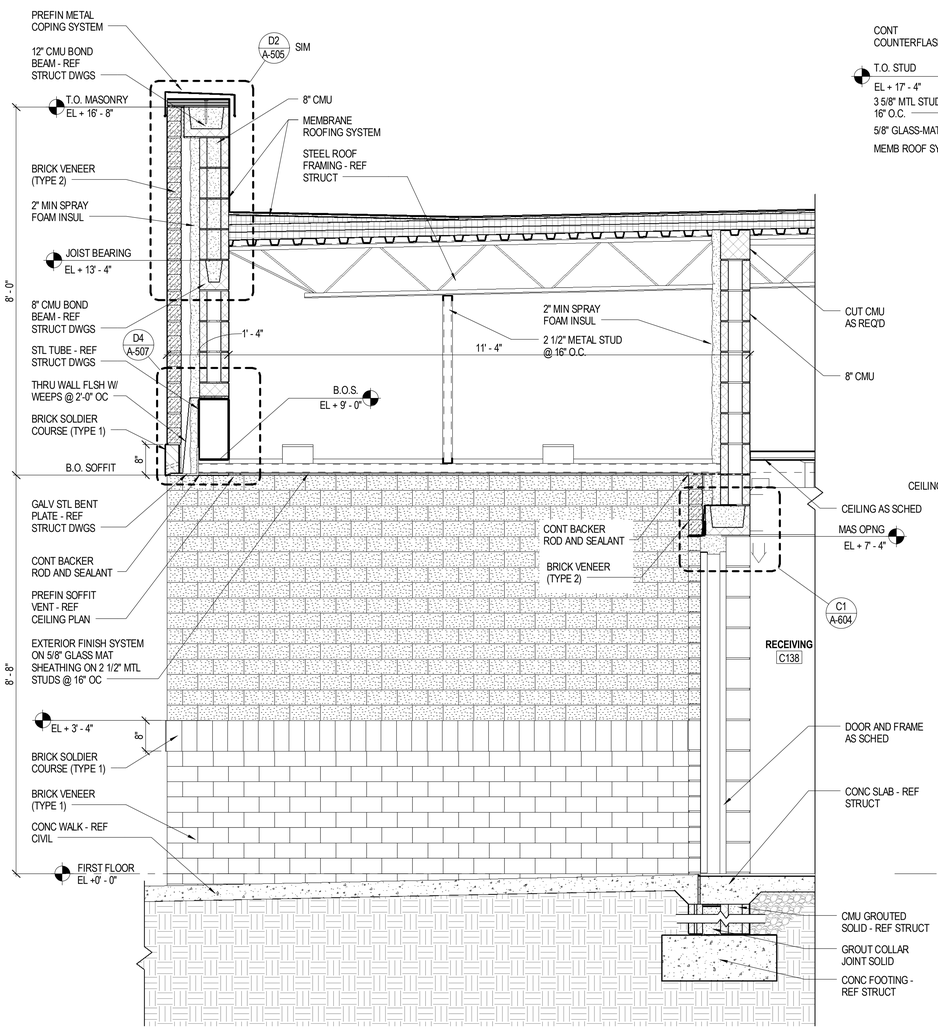

A1 / A-305 WALL SECTION
SCALE: 3/4" = 1'-0"

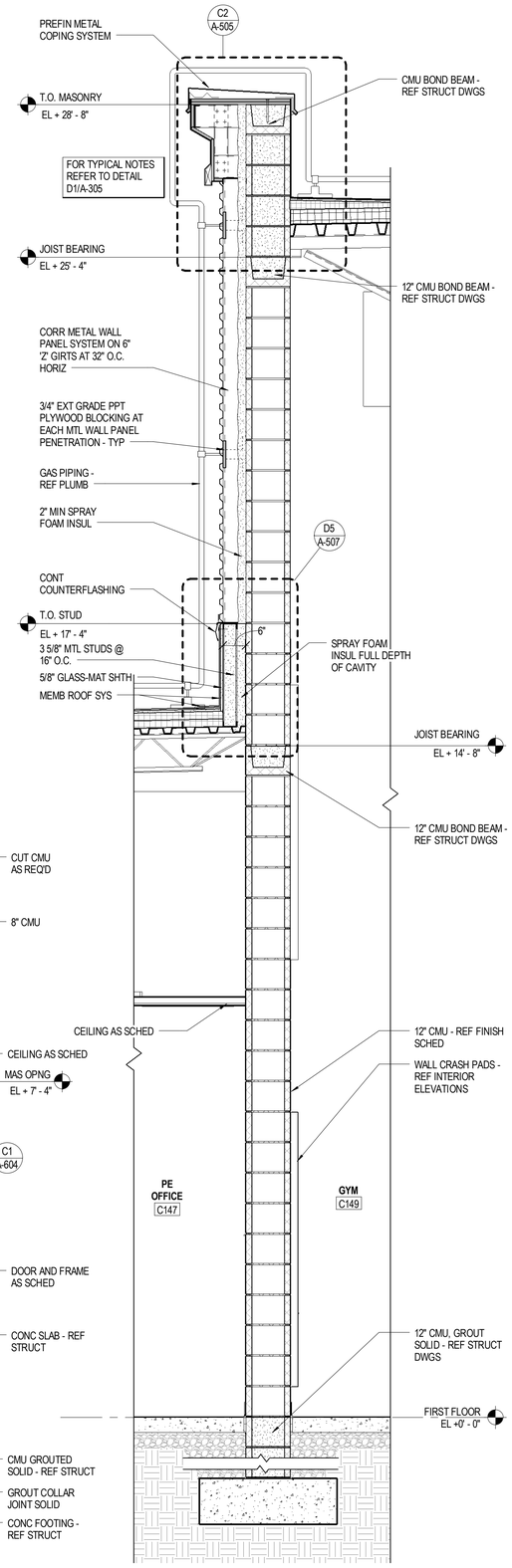

A3 / A-305 WALL SECTION
SCALE: 3/4" = 1'-0"

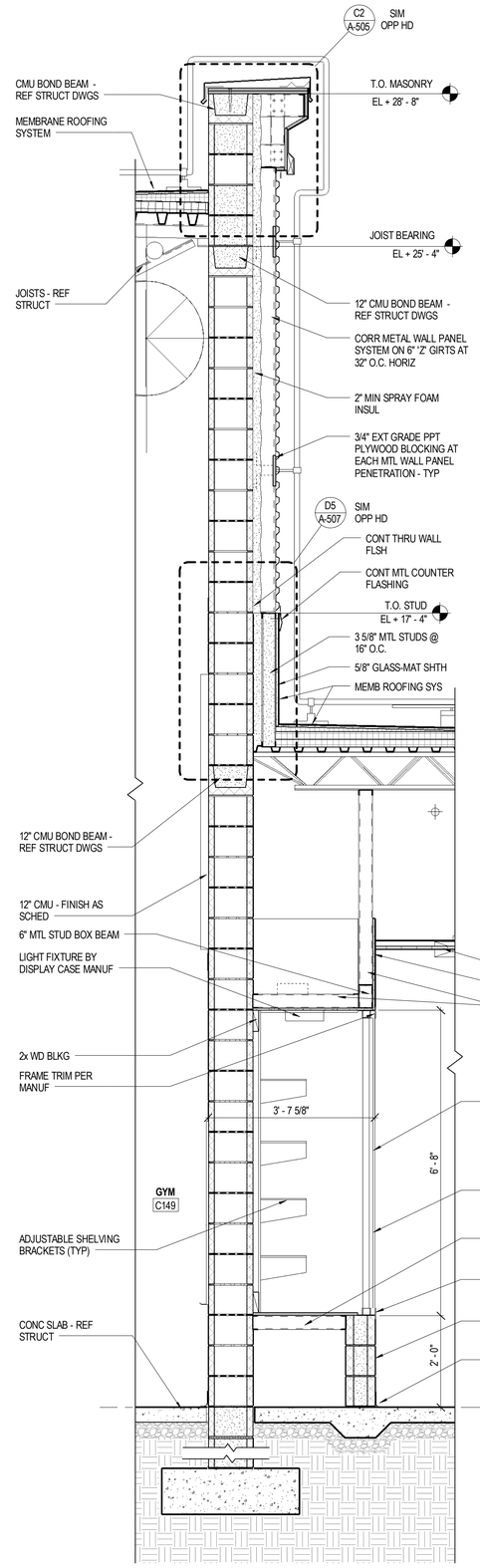

FOR TYPICAL NOTES REFER TO WALL SECTION A4/A-304

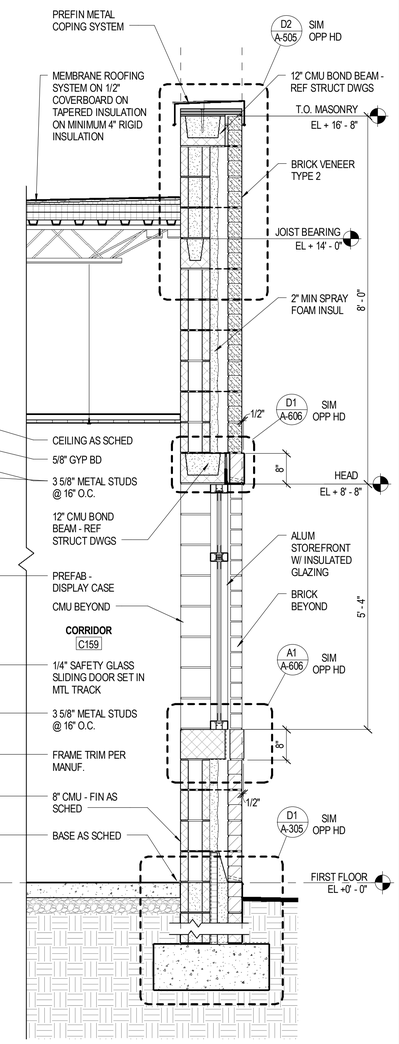

A5 / A-305 WALL SECTION
SCALE: 3/4" = 1'-0"

Received by SBBCC 3.2.2015

S.B. Ballard Construction Company
RRMM ARCHITECTS
WALLER TODD & SADLER ARCHITECTS
The Livas Group Architects, P.C.

MARK	DATE	REVISIONS	BY	DESCRIPTION

DATE	03-03-2015
PROJECT	10105.22
DESIGNED	LRS
DRAWN	HJH
CHECKED	DRJ

COMMONWEALTH OF VIRGINIA
C. DUANE M. HARVER
Lic. No. 6310
03/03/15
ARCHITECT

SBBCC PROJECT NUMBER: NFS-2014-317
VIRGINIA DEPARTMENT OF EDUCATION: 118-48-00-100

PROJECT
CITY OF NORFOLK AND NORFOLK PUBLIC SCHOOLS
BROAD CREEK IB ELEMENTARY SCHOOL
NORFOLK, VIRGINIA

DRAWING
WALL SECTIONS

SHEET
A-305

C:\Users\rgossett\Documents\10105-22 Broad Creek Elem School - Central_rgossett.rvt
3/3/2015 5:34:54 PM

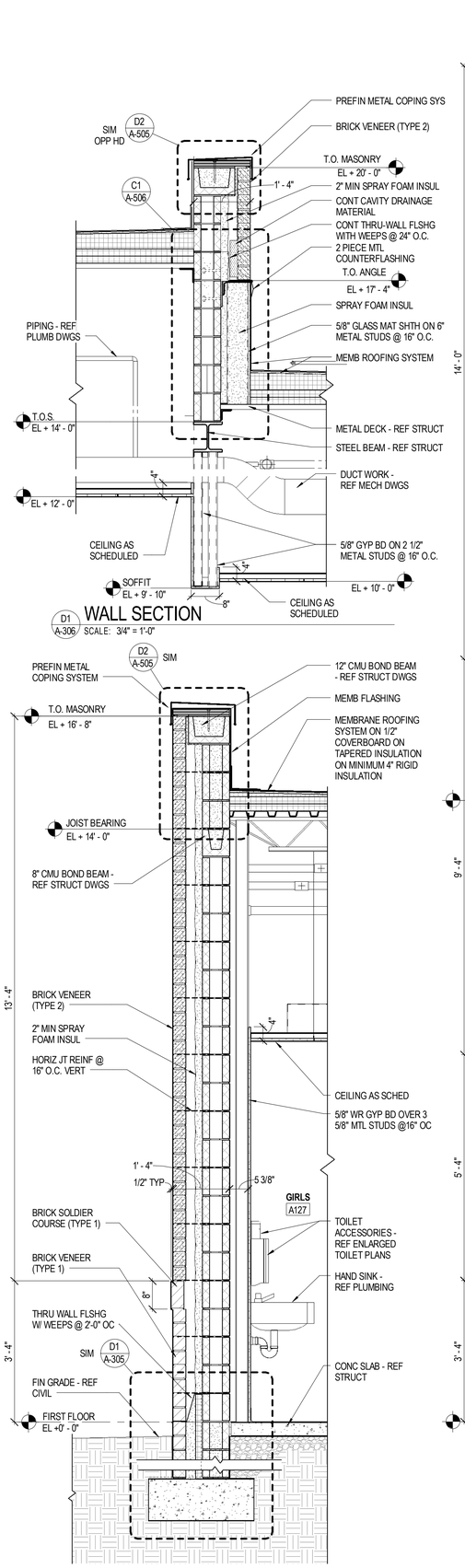

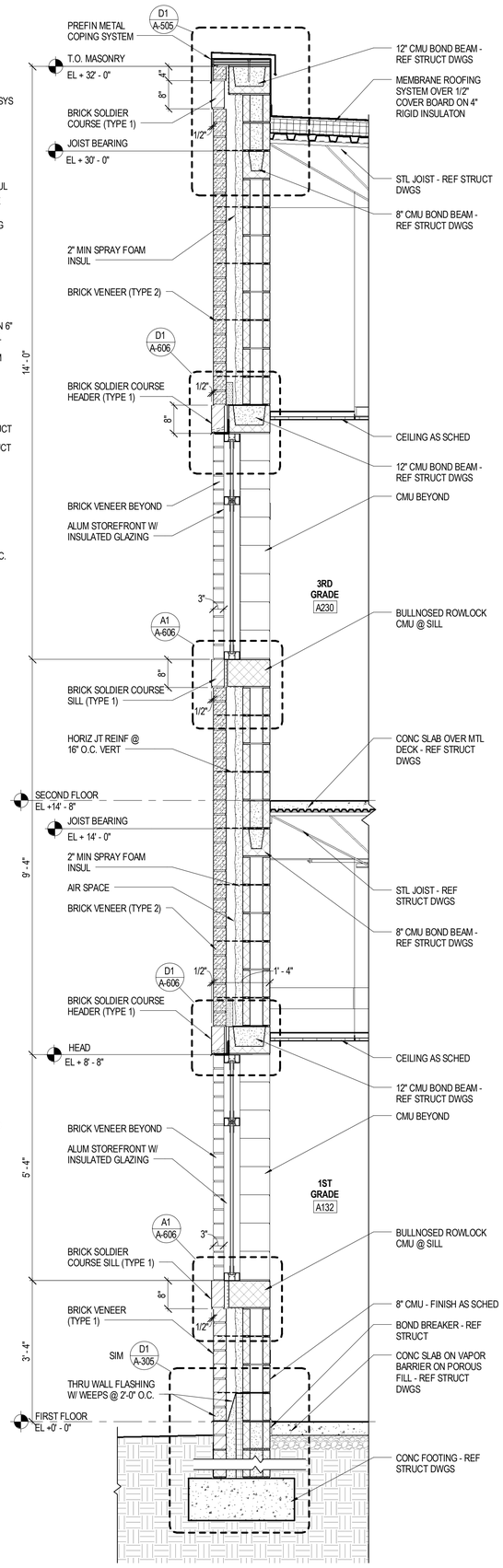

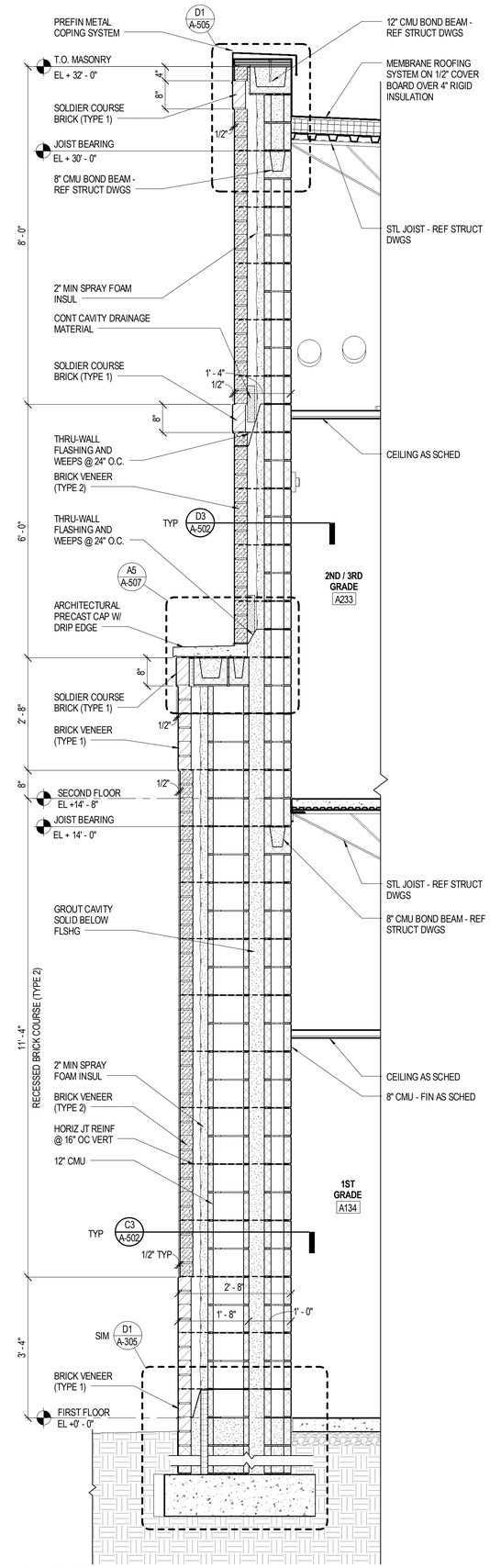

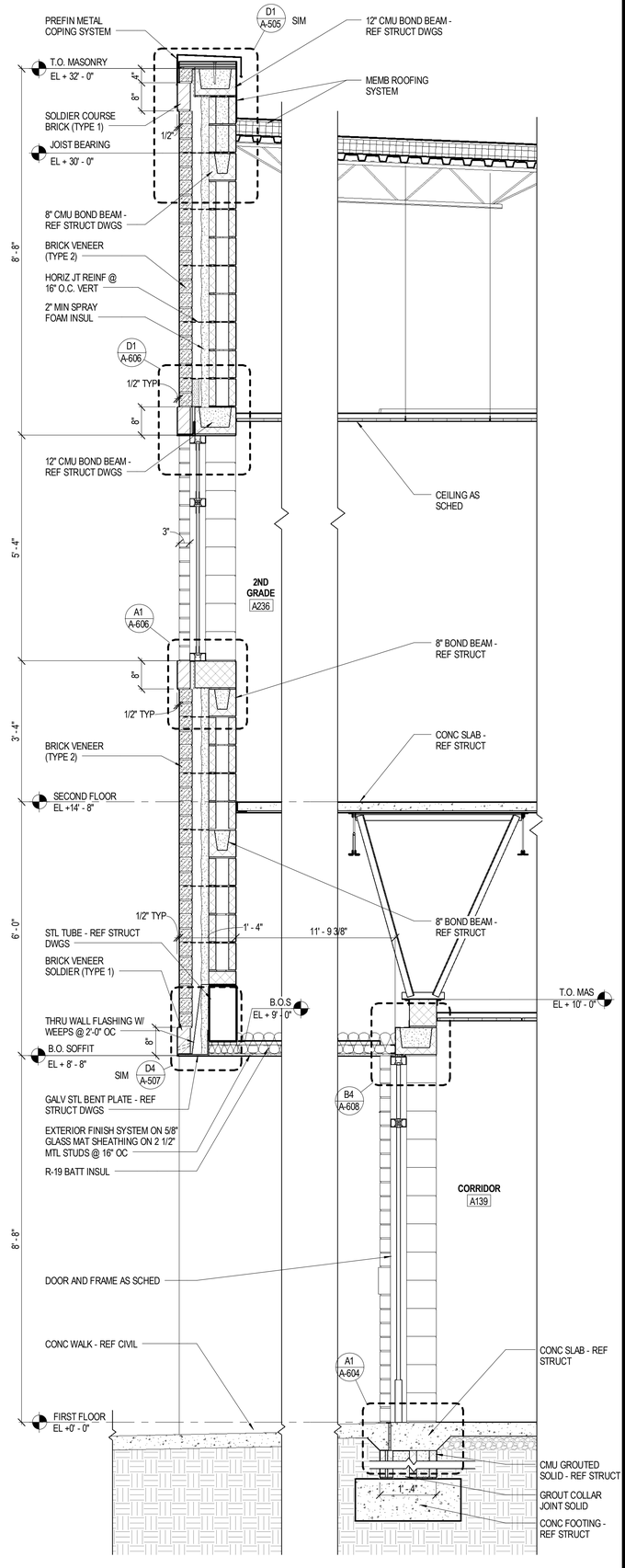

Received by SBBCC 3.2.2015

S.B. Ballard Construction Company

RRMM ARCHITECTS

WALLER TODD & SADLER ARCHITECTS

The Livas Group Architects, P.C.

MARK	DATE	BY	DESCRIPTION

REVISIONS

DATE	03-03-2015
PROJECT	10105.22
DESIGNED	LRS
DRAWN	HJH
CHECKED	DRJ

COMMONWEALTH OF VIRGINIA
DUANE M. HARVER
Lic. No. 6310
03/03/15
ARCHITECT

SBBCC PROJECT NUMBER: NPS-2014-317
VIRGINIA DEPARTMENT OF EDUCATION: 118-46-00-100

PROJECT
CITY OF NORFOLK AND NORFOLK PUBLIC SCHOOLS
BROAD CREEK IB ELEMENTARY SCHOOL
NORFOLK, VIRGINIA

DRAWING
WALL SECTIONS

SHEET
A-306

C:\Users\rgossett\Documents\10105-22 Broad Creek Elem School - Central_rgossett.rvt

3/3/2015 5:35:03 PM

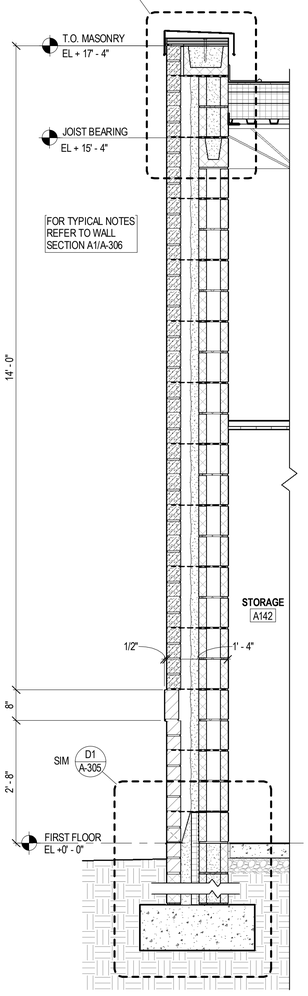

A1 WALL SECTION
A-307 SCALE: 3/4" = 1'-0"

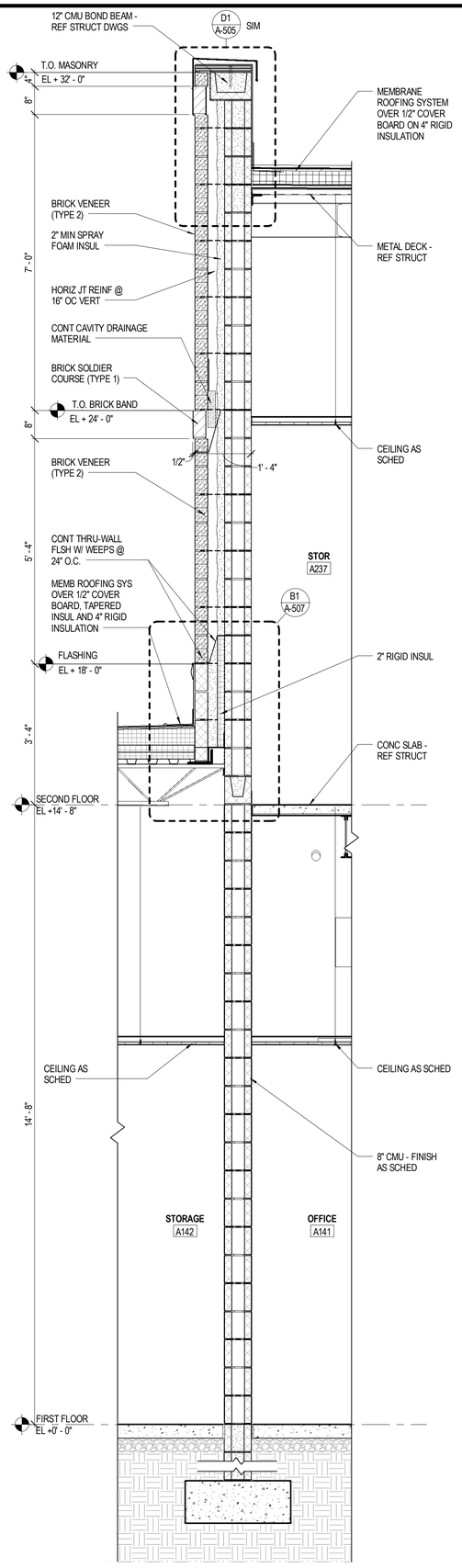

A2 WALL SECTION
A-307 SCALE: 3/4" = 1'-0"

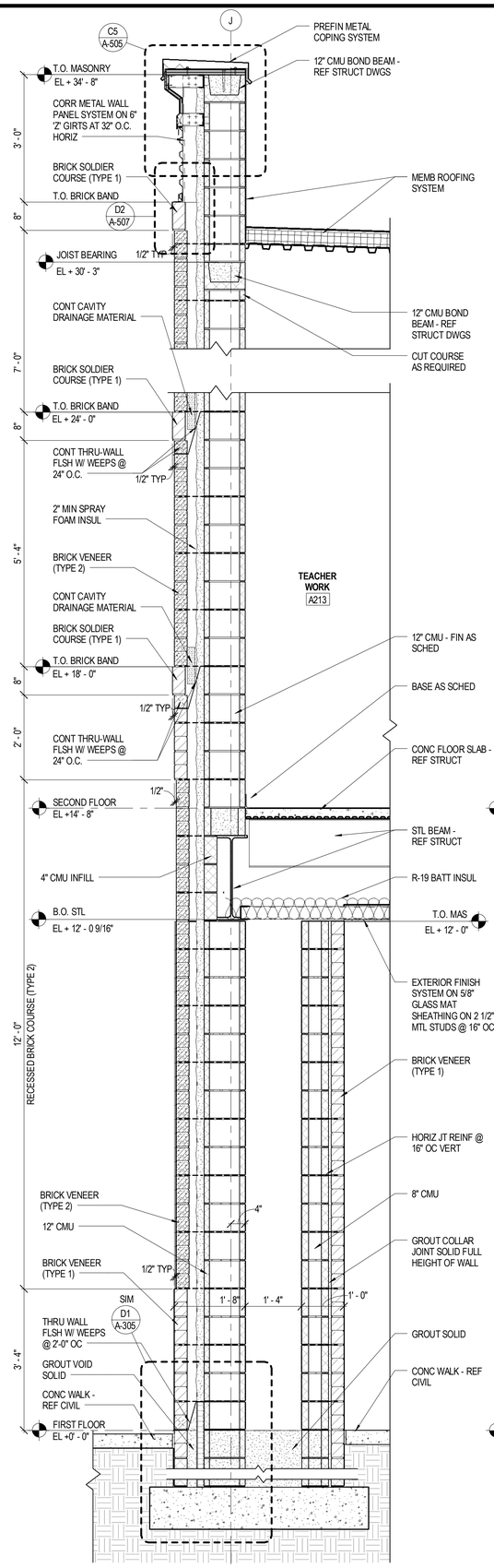

A3 WALL SECTION
A-307 SCALE: 3/4" = 1'-0"

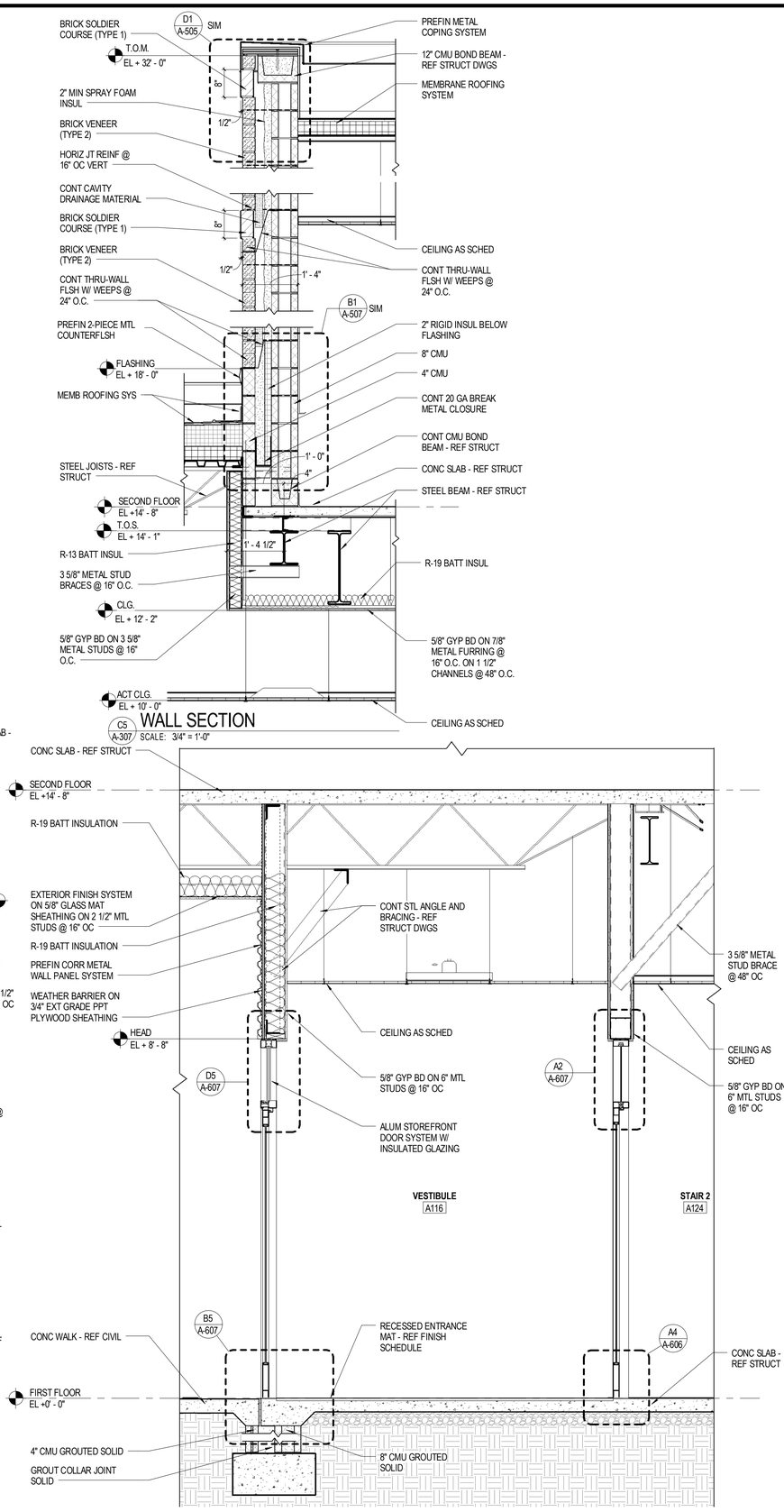

A5 WALL SECTION
A-307 SCALE: 3/4" = 1'-0"

Received by SBBCC 3.2.2015

S.B. Ballard Construction Company

RRMM ARCHITECTS

WALLER TODD & SADLER ARCHITECTS

The Livas Group Architects, P.C.

MARK	DATE	DESCRIPTION	BY
REVISIONS			

DATE	03-03-2015
PROJECT	10105.22
DESIGNED	LRS
DRAWN	HJH
CHECKED	DRJ

COMMONWEALTH OF VIRGINIA
DUANE M. HARVER
Lic. No. 6310
03/03/15
ARCHITECT

PROJECT
CITY OF NORFOLK AND NORFOLK PUBLIC SCHOOLS
BROAD CREEK IB ELEMENTARY SCHOOL
NORFOLK, VIRGINIA

SBBCC PROJECT NUMBER: NPS-2014-317
VIRGINIA DEPARTMENT OF EDUCATION: 118-46-00-100

DRAWING
WALL SECTIONS

SHEET
A-307

C:\Users\rgossett\Documents\10105-22 Broad Creek Elem School - Central_rgossett.rvt

3/3/2015 5:35:11 PM

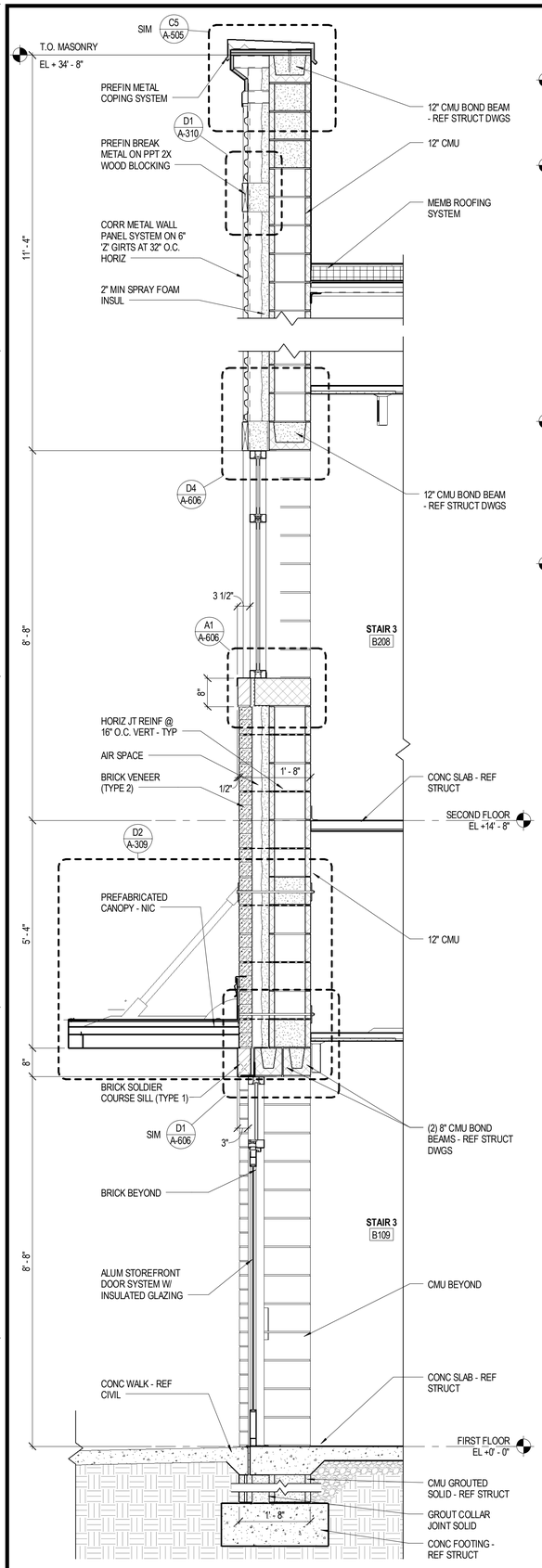

A1 A-308 WALL SECTION
SCALE: 3/4" = 1'-0"

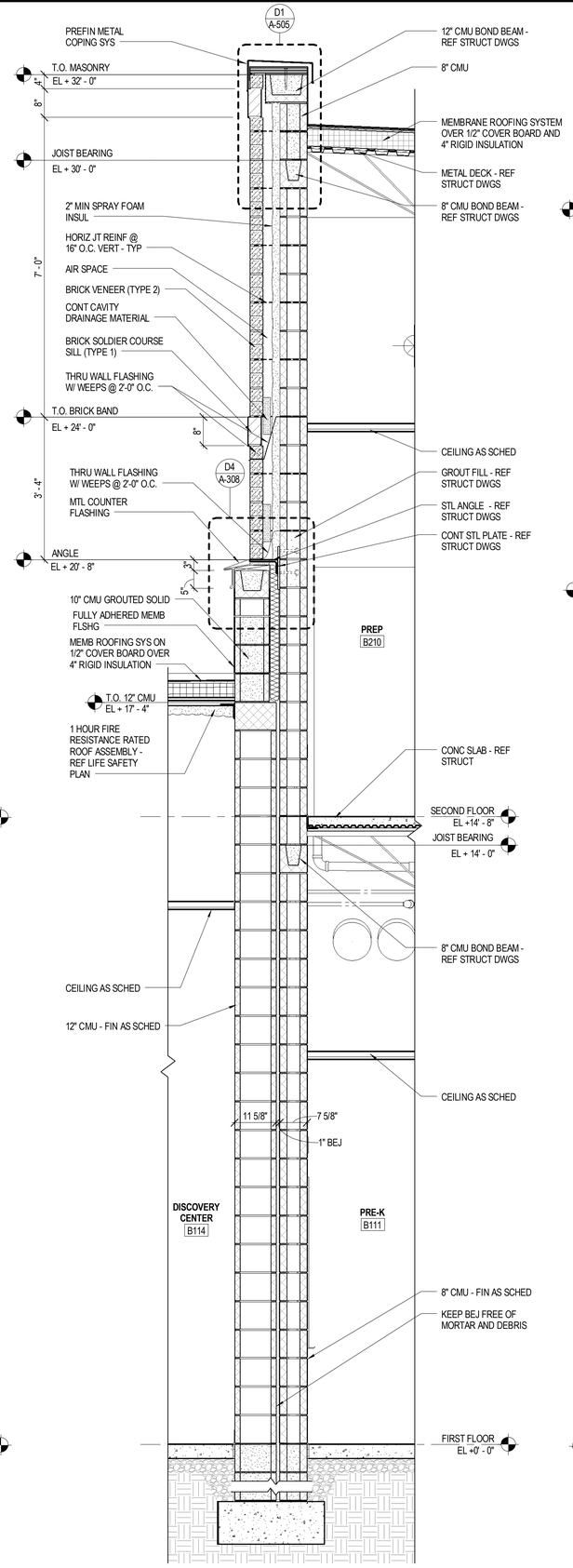

A2 A-308 WALL SECTION
SCALE: 3/4" = 1'-0"

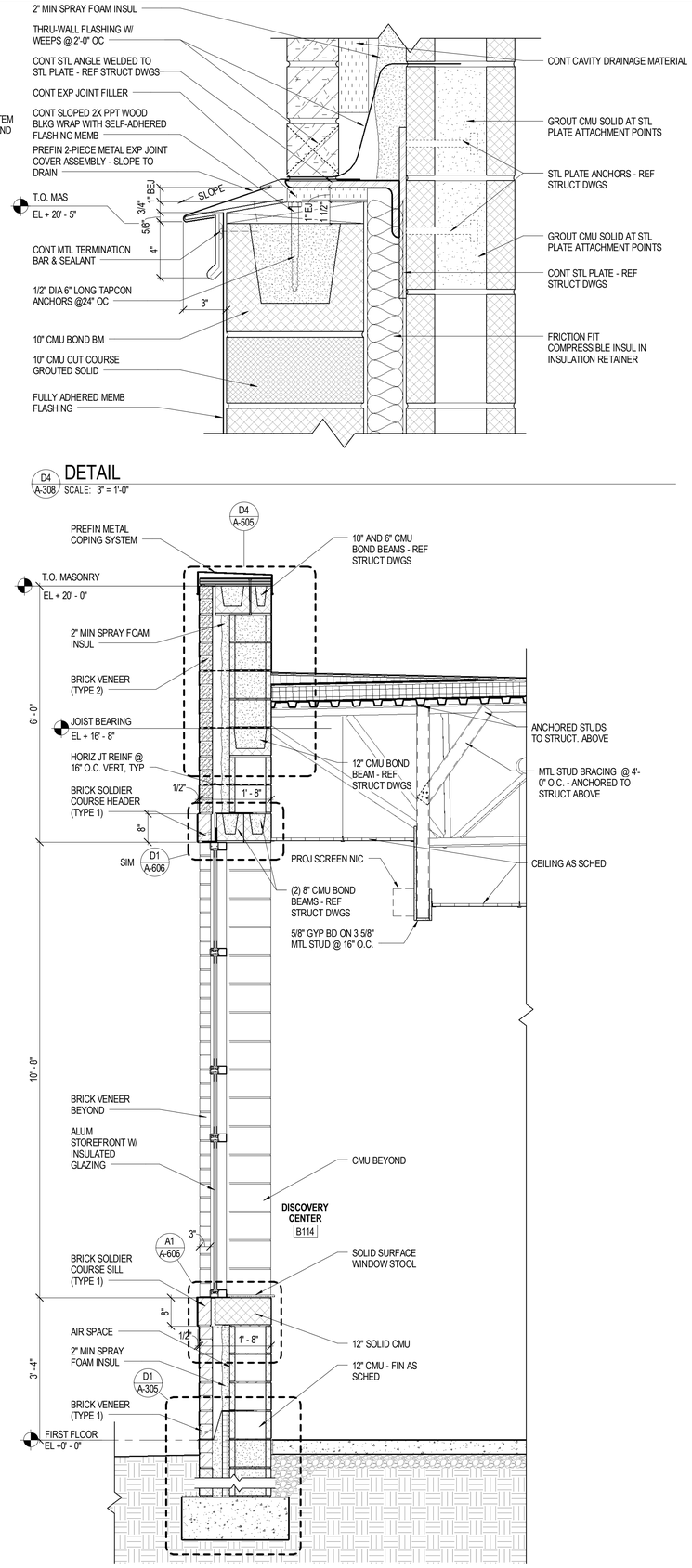

D4 A-308 DETAIL
SCALE: 3" = 1'-0"

A4 A-308 WALL SECTION
SCALE: 3/4" = 1'-0"

Received by SBBCC 3.2.2015

S.B. Ballard Construction Company
RRMM ARCHITECTS
WALLER TODD & SADLER ARCHITECTS
The Livas Group Architects, P.C.

MARK	DATE	BY	DESCRIPTION
REVISIONS			

DATE	03-03-2015
PROJECT	10105.22
DESIGNED	LRS
DRAWN	HJH
CHECKED	DRJ

COMMONWEALTH OF VIRGINIA
C. DUANE M. HARVER
Lic. No. 6310
03/03/15
ARCHITECT

SBBCC PROJECT NUMBER: NFS-2014-317
VIRGINIA DEPARTMENT OF EDUCATION: 118-48-00-100

PROJECT
CITY OF NORFOLK AND NORFOLK PUBLIC SCHOOLS
BROAD CREEK IB ELEMENTARY SCHOOL
NORFOLK, VIRGINIA

DRAWING
WALL SECTIONS

SHEET
A-308

C:\Users\cgosset\Documents\10105-22 Broad Creek Elem School - Central_cgosset.rvt
3/3/2015 5:35:19 PM

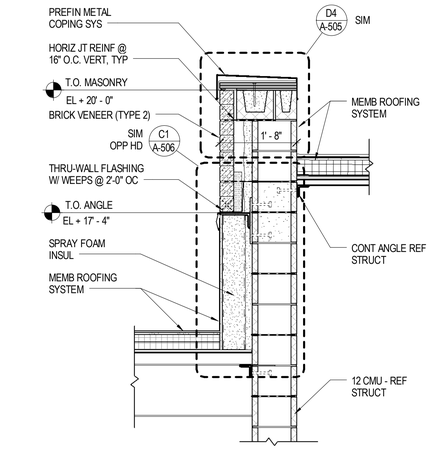

D1 A-309 WALL SECTION
SCALE: 3/4" = 1'-0"

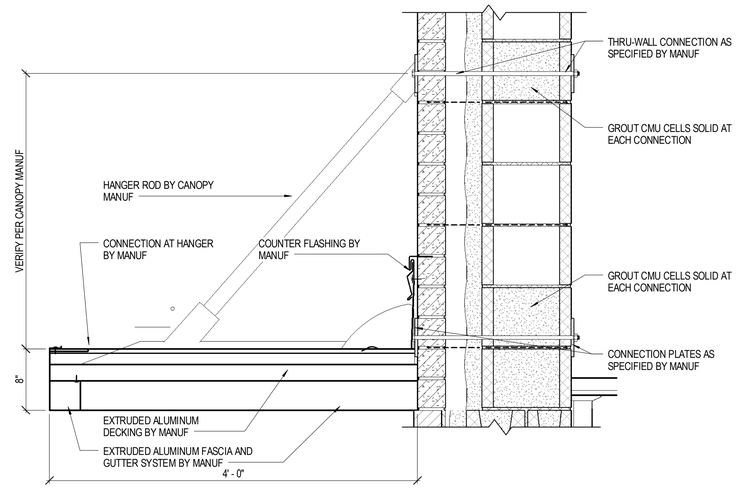

D2 A-309 SECTION DETAIL - CANOPY NIC
SCALE: 1 1/2" = 1'-0"

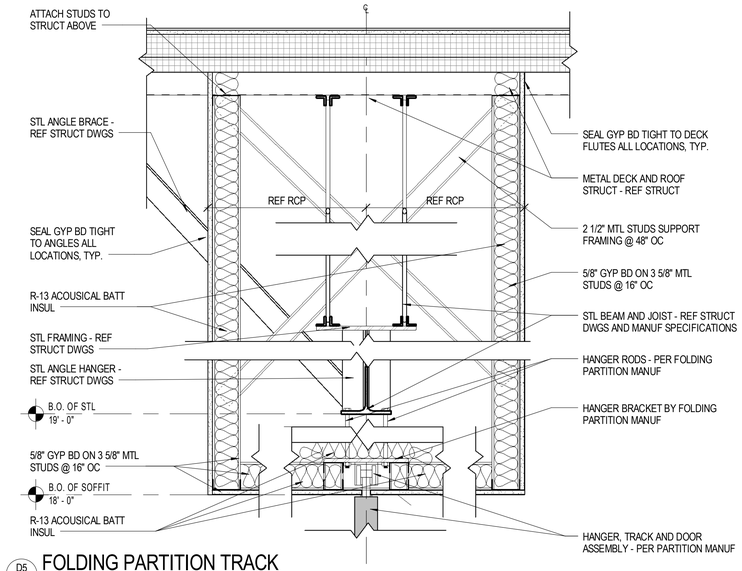

D5 A-309 FOLDING PARTITION TRACK
SCALE: 1 1/2" = 1'-0"

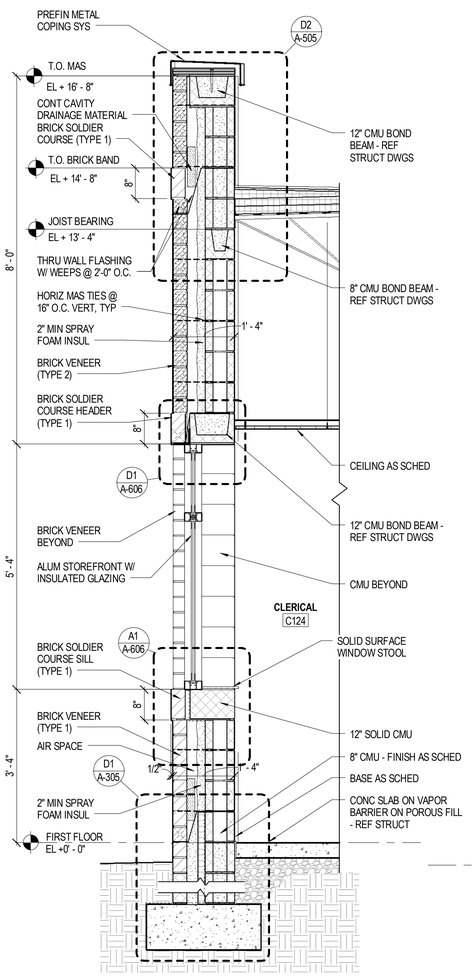

A1 A-309 WALL SECTION
SCALE: 3/4" = 1'-0"

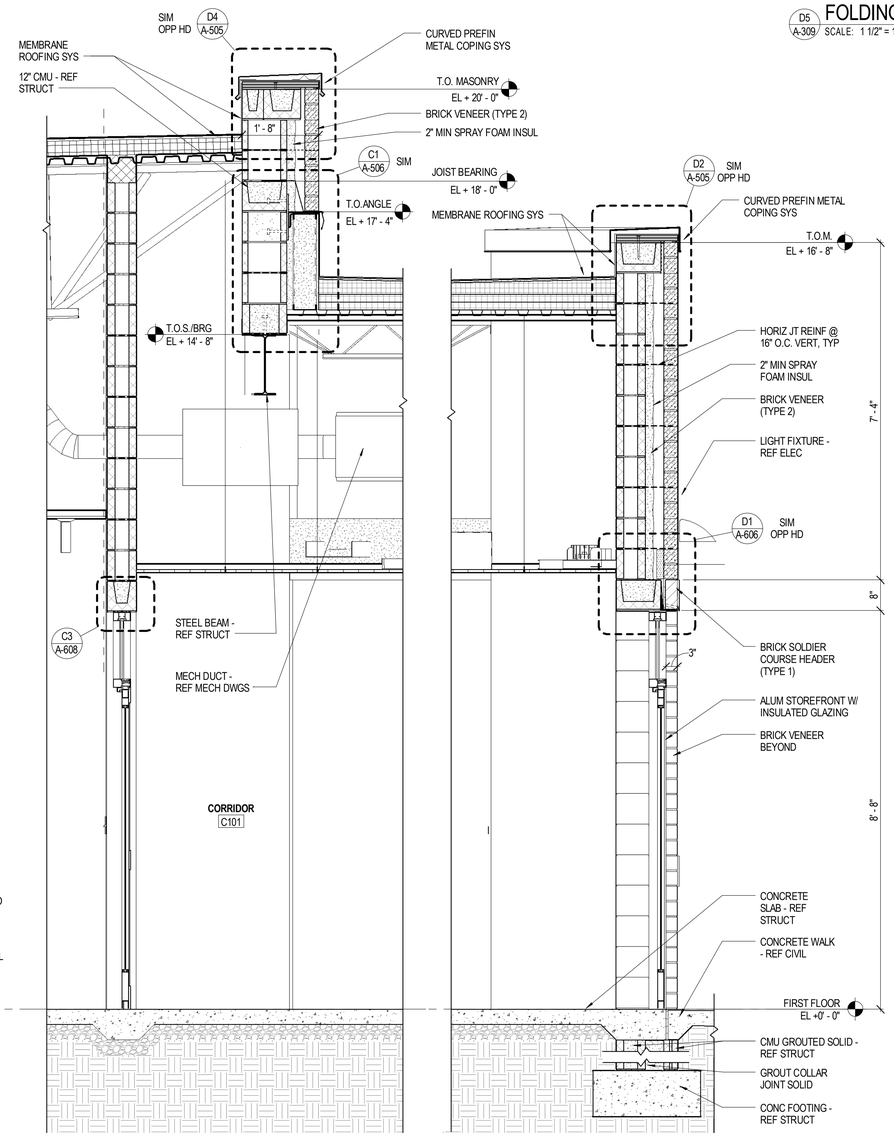

A2 A-309 WALL SECTION
SCALE: 3/4" = 1'-0"

Received by SBBCC 3.2.2015

S.B. Ballard Construction Company
RRMM ARCHITECTS
WALLER TODD & SADLER ARCHITECTS
The Livas Group Architects, P.C.

MARK	DATE	BY	DESCRIPTION
REVISIONS			

DATE	03-03-2015
PROJECT	10105.22
DESIGNED	LRS
DRAWN	HJH
CHECKED	DRJ

COMMONWEALTH OF VIRGINIA
DUANE M. HARVER
Lic. No. 6310
03/03/15
ARCHITECT

PROJECT
CITY OF NORFOLK AND NORFOLK PUBLIC SCHOOLS
BROAD CREEK IB ELEMENTARY SCHOOL
NORFOLK, VIRGINIA
SBBCC PROJECT NUMBER: NPS-2014-317
VIRGINIA DEPARTMENT OF EDUCATION: 118-46-00-100

DRAWING
WALL SECTIONS

SHEET
A-309

C:\Users\rgossett\Documents\10105-22 Broad Creek Elem School - Central_rgossett.rvt
3/3/2015 5:35:28 PM

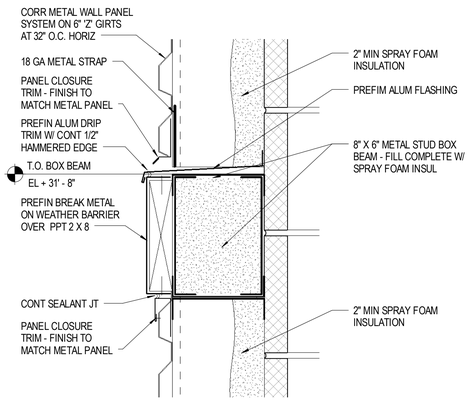

D1 A-310 DETAIL - ACCENT BANDING
SCALE: 3" = 1'-0"

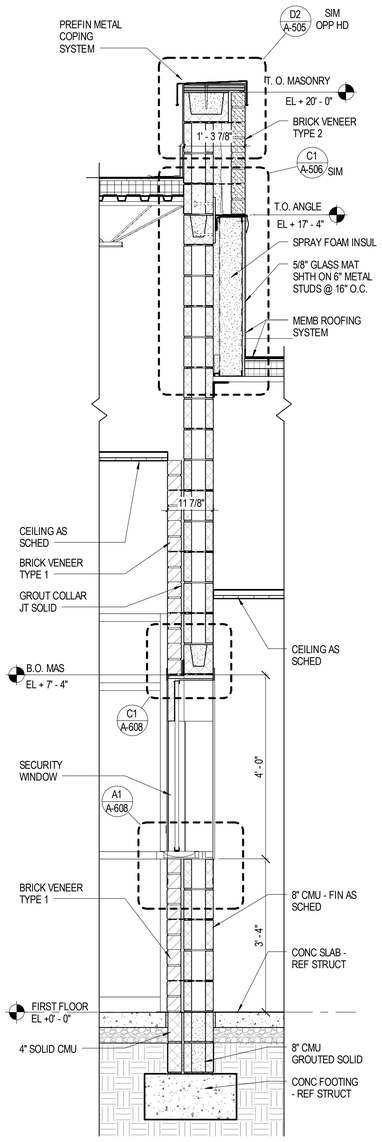

A1 A-310 WALL SECTION
SCALE: 3/4" = 1'-0"

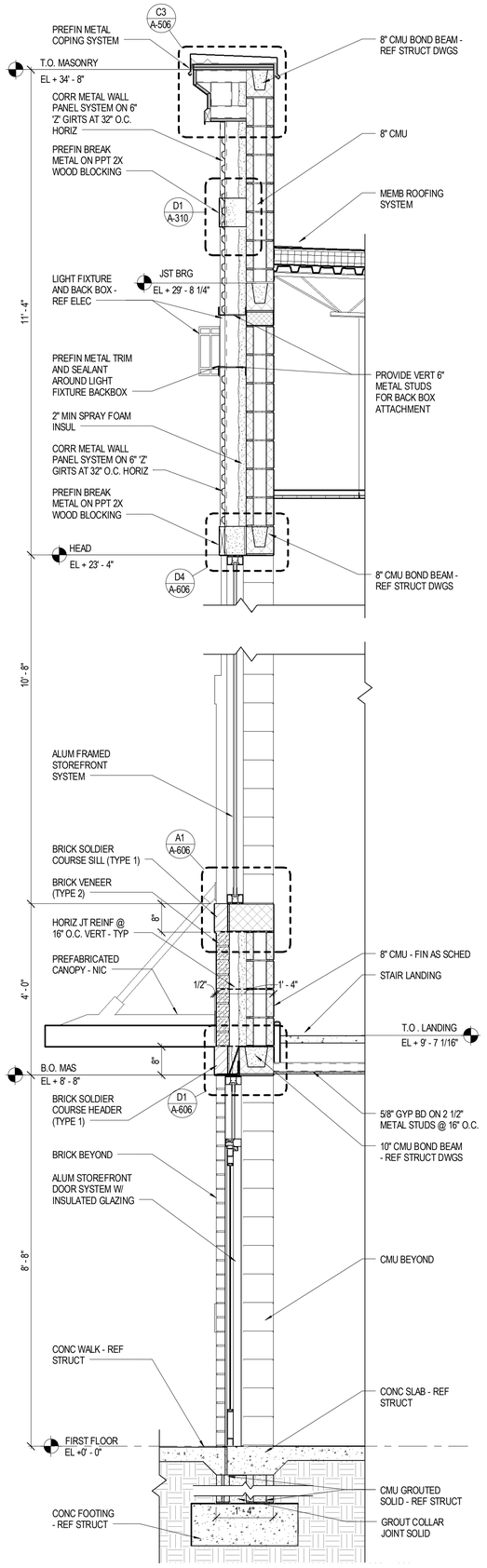

A2 A-310 WALL SECTION
SCALE: 3/4" = 1'-0"

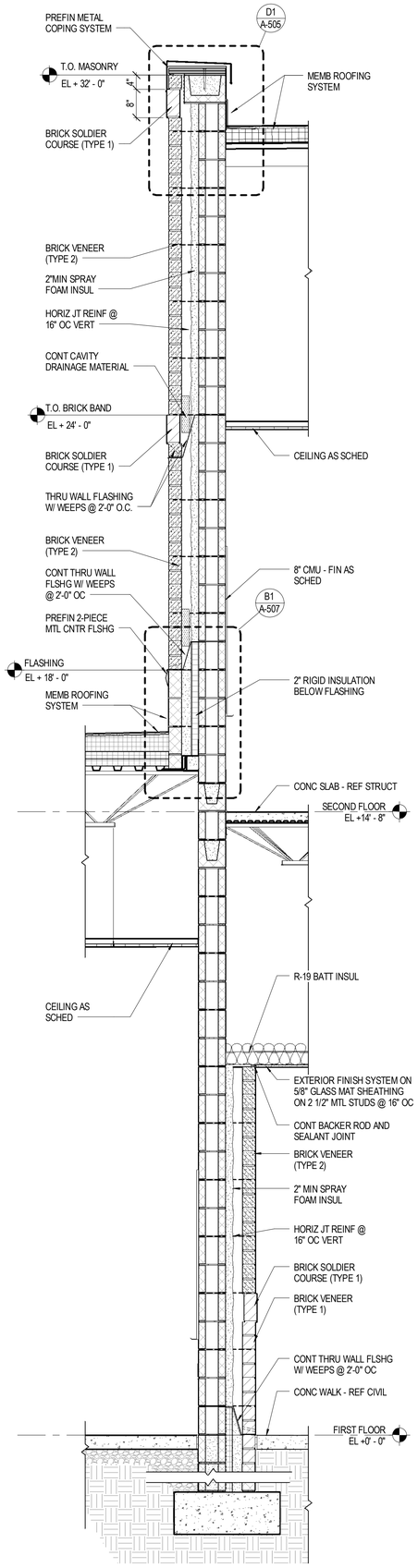

A3 A-310 WALL SECTION
SCALE: 3/4" = 1'-0"

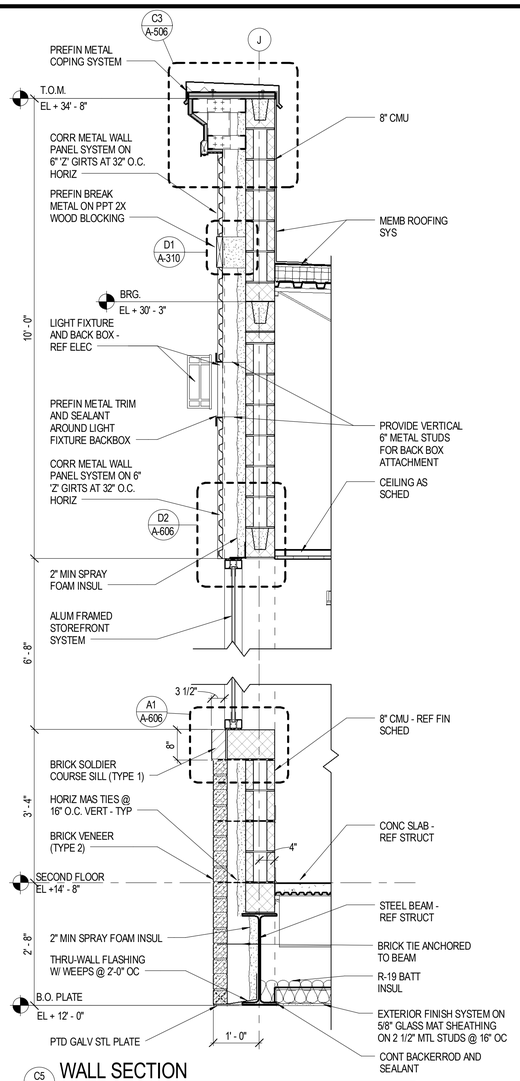

C5 A-310 WALL SECTION
SCALE: 3/4" = 1'-0"

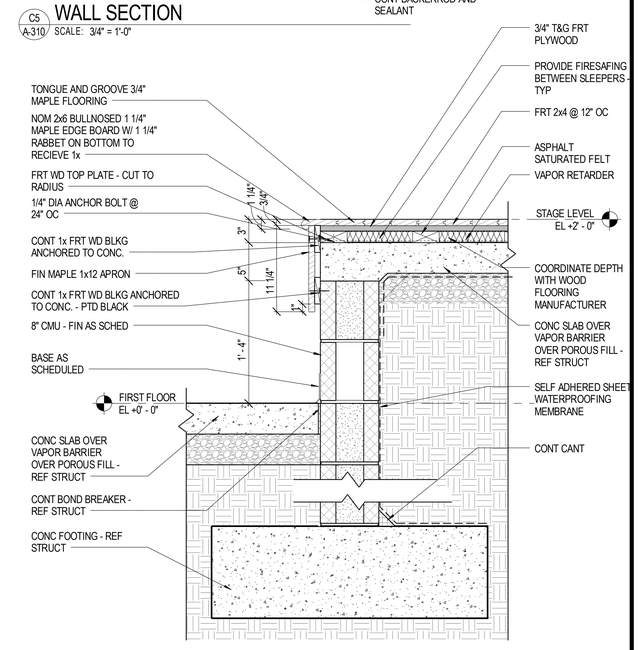

A5 A-310 STAGE FRONT EDGE SECTION
SCALE: 1 1/2" = 1'-0"

Received by SBBCC 3.2.2015

S.B. Ballard Construction Company
RRMM ARCHITECTS
WALLER TODD & SADLER ARCHITECTS
The Livas Group Architects, P.C.

MARK	DATE	BY	DESCRIPTION

REVISIONS

DATE	03-03-2015
PROJECT	10105.22
DESIGNED	LRS
DRAWN	HJH
CHECKED	DRJ

COMMONWEALTH OF VIRGINIA
C. DUANE M. HARVER
Lic. No. 6310
03/03/15
ARCHITECT

SBBCC PROJECT NUMBER: NPS-2014-317
VIRGINIA DEPARTMENT OF EDUCATION: 118-49-00-100

PROJECT
CITY OF NORFOLK AND NORFOLK PUBLIC SCHOOLS
BROAD CREEK IB ELEMENTARY SCHOOL
NORFOLK, VIRGINIA

DRAWING
WALL SECTIONS

SHEET
A-310

C:\Users\rgossett\Documents\10105-22 Broad Creek Elem School - Central_rgossett.rvt
3/3/2015 5:35:38 PM

A1 A-402 ENLARGED PLAN - ADMINISTRATION AND CLINIC
SCALE: 1/4" = 1'-0"

Received by SBBCC 3.2.2015

S.B. Ballard Construction Company

RRMM ARCHITECTS

WALLER TODD & SADLER ARCHITECTS

The Livas Group Architects, P.C.

MARK	DATE	REVISIONS	BY	DESCRIPTION

DATE	03-03-2015
PROJECT	10105.22
DESIGNED	LRS
DRAWN	HJH
CHECKED	DRJ

COMMONWEALTH OF VIRGINIA
C. DUANE M. HARVER
Lic. No. 6310
03/03/15
ARCHITECT

PROJECT
CITY OF NORFOLK AND NORFOLK PUBLIC SCHOOLS
BROAD CREEK IB ELEMENTARY SCHOOL
NORFOLK, VIRGINIA

SBBCC PROJECT NUMBER: NPS-2014-317
VIRGINIA DEPARTMENT OF EDUCATION: 118-48-00-100

DRAWING
ENLARGED PLAN - ADMINISTRATION AND CLINIC

SHEET
A-402

C:\Users\rgosset\Documents\10105-22 Broad Creek Elem School - Central_rgosset.rvt
3/3/2015 5:35:51 PM

A1 / A-403 ENLARGED PLAN - DISCOVERY CENTER
SCALE: 1/4" = 1'-0"

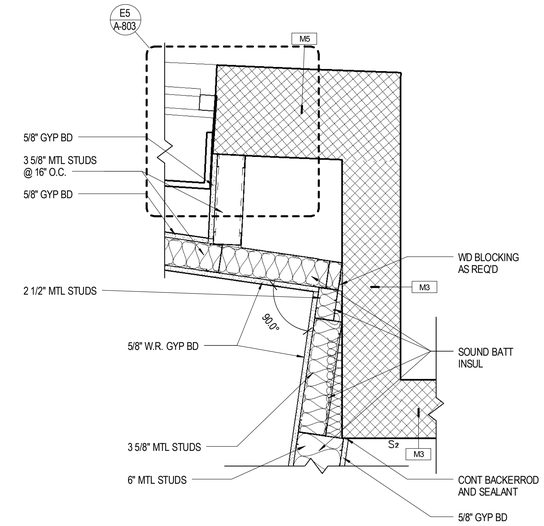

D5 / A-403 PLAN DETAIL
SCALE: 1 1/2" = 1'-0"

Received by SBBCC 3.2.2015

S.B. Ballard Construction Company

RRMM ARCHITECTS

WALLER TODD & SADLER ARCHITECTS

The Livas Group Architects, P.C.

MARK	DATE	DESCRIPTION

REVISIONS

DATE	03-03-2015
PROJECT	10105.22
DESIGNED	LRS
DRAWN	HJH
CHECKED	DRJ

COMMONWEALTH OF VIRGINIA
DUANE M. HARVER
Lic. No. 6310
03/03/15
ARCHITECT

PROJECT
CITY OF NORFOLK AND NORFOLK PUBLIC SCHOOLS
BROAD CREEK IB ELEMENTARY SCHOOL
NORFOLK, VIRGINIA

SBBCC PROJECT NUMBER: NPS-2014-317
VIRGINIA DEPARTMENT OF EDUCATION: 118-46-00-100

DRAWING
ENLARGED PLAN - DISCOVERY CENTER

SHEET
A-403

C:\Users\rsgossett\Documents\10105-22 Broad Creek Elem School - Central_cgossett.rvt
3/3/2015 5:36:01 PM

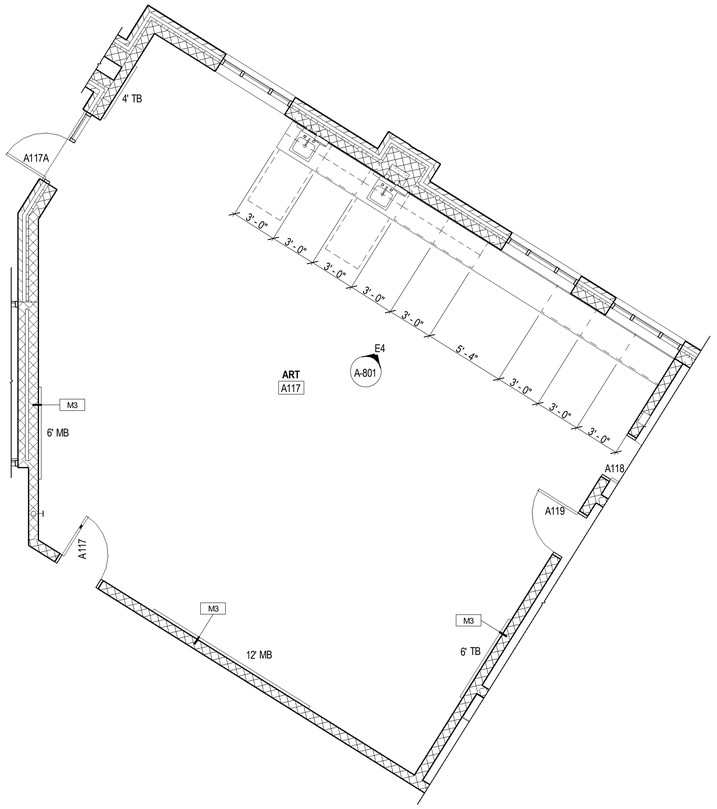

C1 / A-404 ENLARGED PLAN - ART ROOM A117
SCALE: 1/4" = 1'-0"

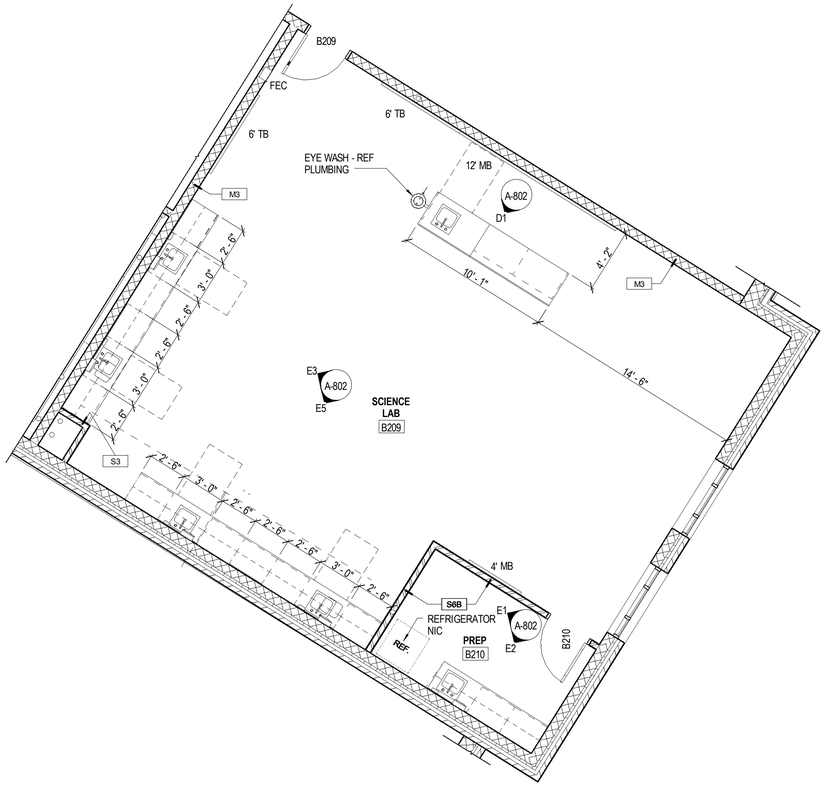

C4 / A-404 ENLARGED PLAN - SCIENCE LAB B209 AND PREP B210
SCALE: 1/4" = 1'-0"

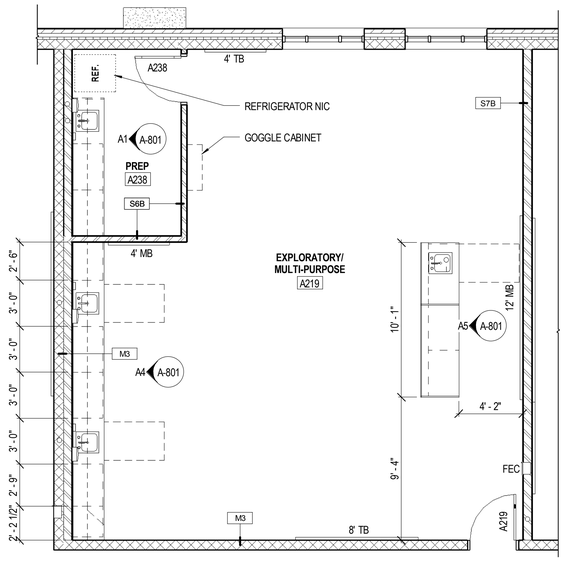

A1 / A-404 ENLARGED PLAN - EXPLORATORY / MULTI-PURPOSE A219 AND PREP A238
SCALE: 1/4" = 1'-0"

Received by SBBCC 3.2.2015

S.B. Ballard Construction Company

RRMM ARCHITECTS

WALLER TODD & SADLER ARCHITECTS

The Livas Group Architects, P.C.

MARK	DATE	BY	DESCRIPTION
REVISIONS			

DATE	03-03-2015
PROJECT	10105.22
DESIGNED	LRS
DRAWN	HJH
CHECKED	DRJ

COMMONWEALTH OF VIRGINIA
DUANE M. HARVER
Lic. No. 6310
03/03/15
ARCHITECT

SBBCC PROJECT NUMBER: NPS-2014-317
VIRGINIA DEPARTMENT OF EDUCATION: 118-46-00-100

PROJECT
CITY OF NORFOLK AND NORFOLK PUBLIC SCHOOLS
BROAD CREEK IB ELEMENTARY SCHOOL
NORFOLK, VIRGINIA

DRAWING
ENLARGED PLANS

SHEET
A-404

C:\Users\rgossett\Documents\10105-22 Broad Creek Elem School - Central_rgossett.rvt
3/3/2015 5:36:09 PM

SHEET KEY NOTES

2 OPERABLE PANEL PARTITION.

16 BENCHES, N.I.C.

27 SOLID COLOR KEYWAY - HOLD COLOR 1" CLEAR FROM VOLLEYBALL COURT MARKING LINES - BOTH SIDES.

28 60'- 4" x 30' - 4" MAIN VOLLEYBALL COURT LINES.

29 2" COURT LINES.

30 2" WIDE THREE POINT LINE.

31 72'-0" x 42'-4" MAIN BASKETBALL COURT LINES.

32 CENTERLINE OF PRIMARY BASKETBALL AND VOLLEYBALL COURTS.

37 VOLLEYBALL SLEEVE - REF A3/A-508.

38 FORWARD FOLDING BASKETBALL BACKSTOP AND GOAL.

42 16 LF OF CRASH PADS - REF A2/A508.

53 STAGE CURTAINS - REF FLOOR PLAN.

54 PAINTED (PT4) 1 1/2" DIA STEEL HANDRAIL SYSTEM

55 CURTAIN PULL CORD LOCATION

56 SCOREBOARD (11'-0" A.F.F.) - N.I.C.

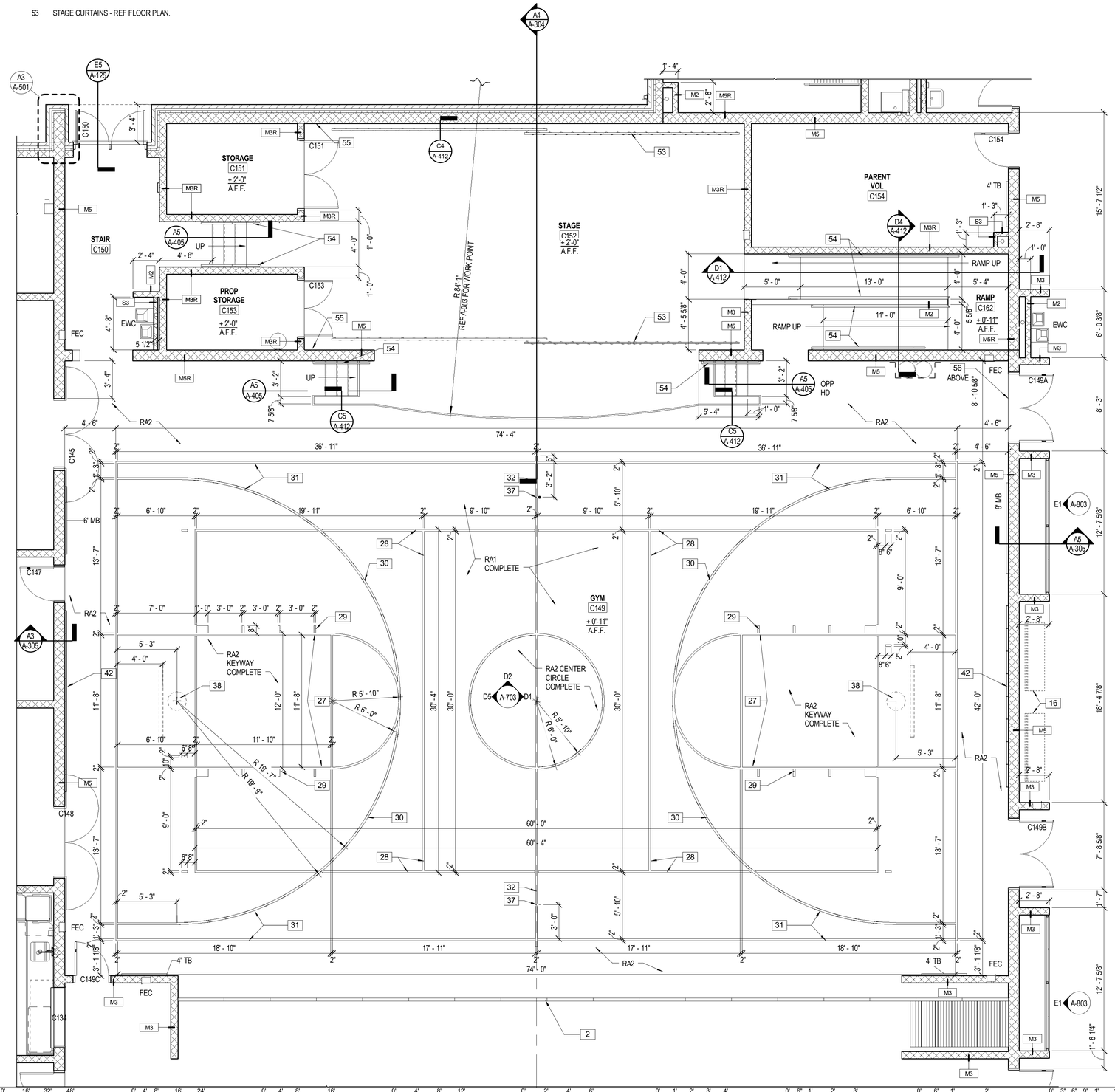

A1 A-405 ENLARGED PLAN - GYMNASIUM AND STAGE
SCALE: 1/4" = 1'-0"

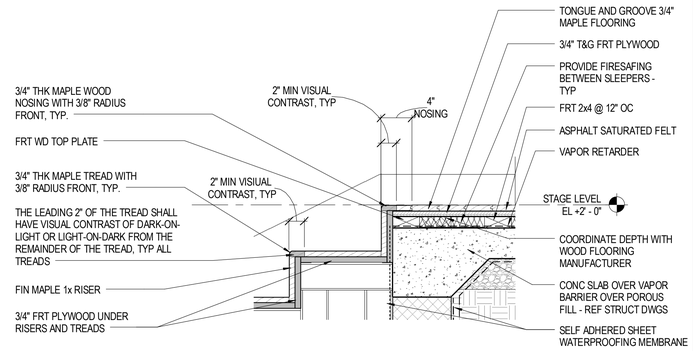

C5 A-405 DETAIL
SCALE: 1 1/2" = 1'-0"

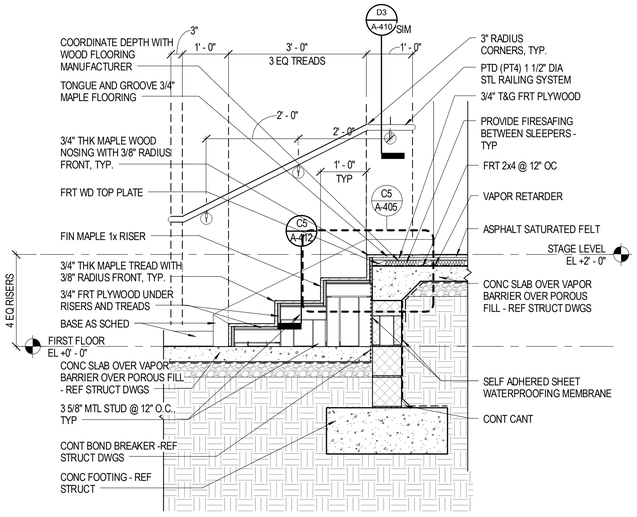

A5 A-405 SECTION
SCALE: 3/4" = 1'-0"

Received by SBBCC 3.2.2015

S.B. Ballard Construction Company
RRMM ARCHITECTS
WALLER TODD & SADLER ARCHITECTS
The Livas Group Architects, P.C.

MARK	DATE	BY	DESCRIPTION
REVISIONS			

DATE	03-03-2015
PROJECT	10105.22
DESIGNED	LRS
DRAWN	HJH
CHECKED	DRJ

COMMONWEALTH OF VIRGINIA
C. DUANE M. HARVER
Lic. No. 6310
03/03/15
ARCHITECT

PROJECT
CITY OF NORFOLK AND NORFOLK PUBLIC SCHOOLS
BROAD CREEK IB ELEMENTARY SCHOOL
NORFOLK, VIRGINIA

SBBCC PROJECT NUMBER: NPS-2014-317
VIRGINIA DEPARTMENT OF EDUCATION 18-48-00-100

DRAWING
ENLARGED PLAN - GYMNASIUM AND STAGE

SHEET
A-405

C:\Users\rgossett\Documents\10105.22 Broad Creek Elem School - Central_rgossett.rvt
3/3/2015 5:36:17 PM

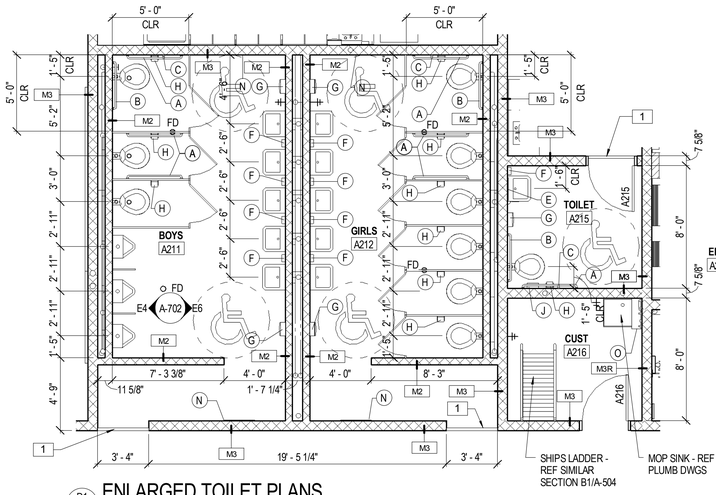

D1 A-406 ENLARGED TOILET PLANS
SCALE: 1/4" = 1'-0"

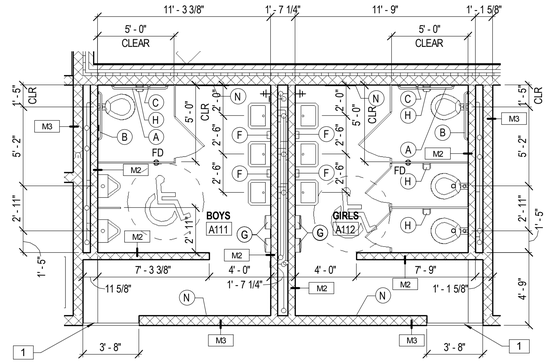

C1 A-406 ENLARGED TOILET PLANS
SCALE: 1/4" = 1'-0"

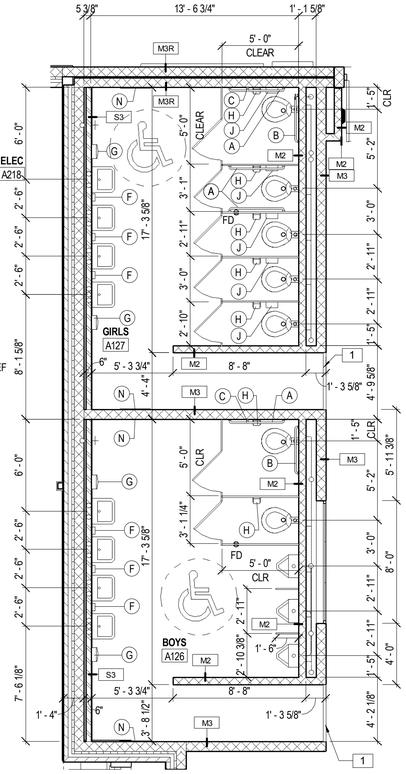

C3 A-406 ENLARGED TOILET PLANS
SCALE: 1/4" = 1'-0"

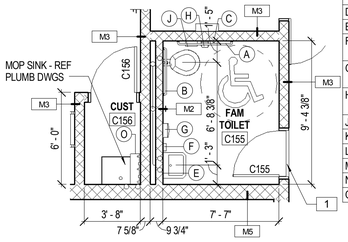

D4 A-406 ENLARGED TOILET PLAN
SCALE: 1/4" = 1'-0"

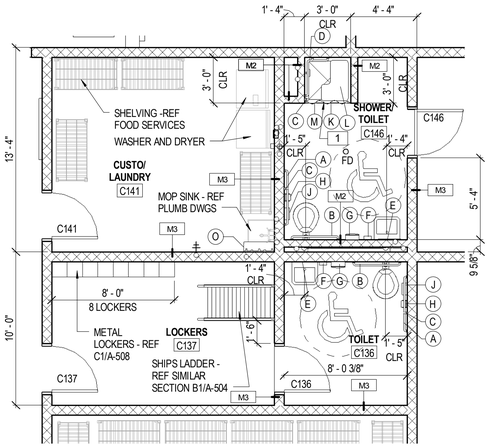

C4 A-406 ENLARGED TOILET PLANS
SCALE: 1/4" = 1'-0"

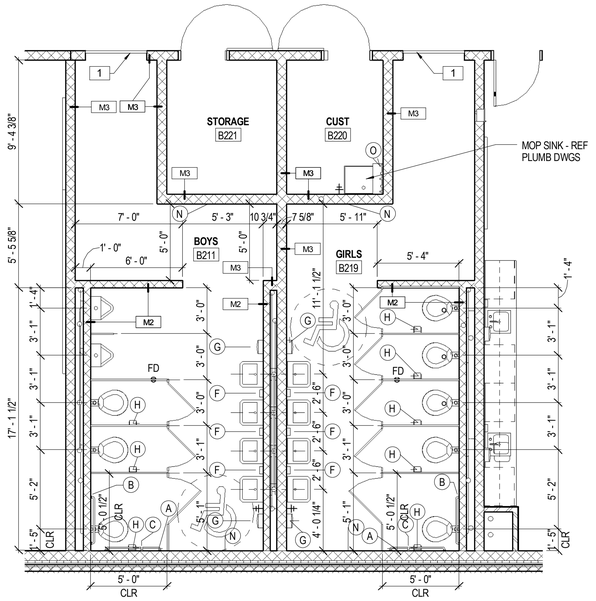

C5 A-406 ENLARGED TOILET PLANS
SCALE: 1/4" = 1'-0"

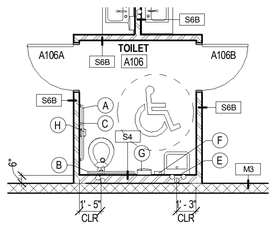

B1 A-406 ENLARGED TOILET PLAN
SCALE: 1/4" = 1'-0"

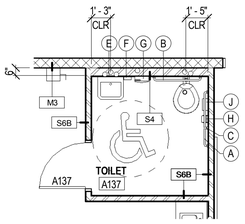

B2 A-406 ENLARGED TOILET PLAN
SCALE: 1/4" = 1'-0"

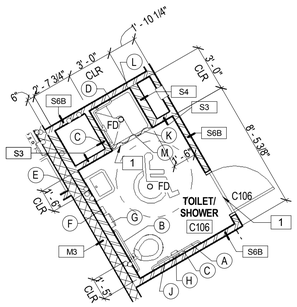

B3 A-406 ENLARGED CLINIC TOILET
SCALE: 1/4" = 1'-0"

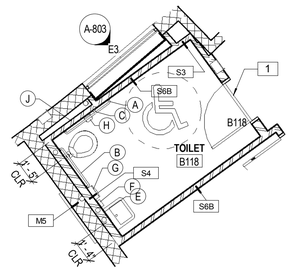

B4 A-406 ENLARGED TOILET PLAN
SCALE: 1/4" = 1'-0"

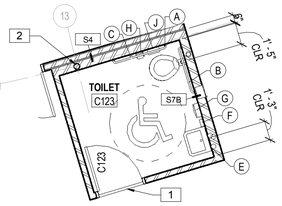

B5 A-406 ENLARGED TOILET PLAN
SCALE: 1/4" = 1'-0"

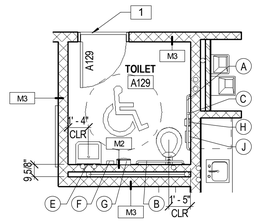

B6 A-406 ENLARGED TOILET PLAN
SCALE: 1/4" = 1'-0"

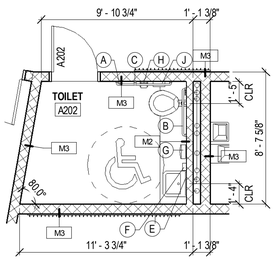

A1 A-406 SPEC ED TOILET
SCALE: 1/4" = 1'-0"

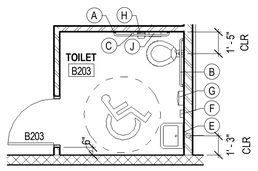

A2 A-406 ENLARGED TOILET PLAN
SCALE: 1/4" = 1'-0"

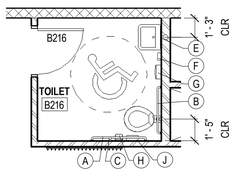

A3 A-406 ENLARGED TOILET PLAN
SCALE: 1/4" = 1'-0"

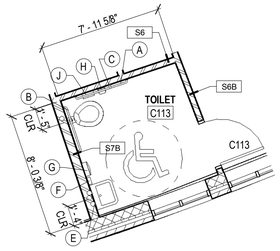

A4 A-406 ENLARGED TOILET PLAN
SCALE: 1/4" = 1'-0"

KEY NOTES

1. MARBLE THRESHOLD - REF DETAIL A2/A-604
2. STL COLUMN - REF STRUCT DWGS

TOILET ACCESSORY SCHEDULE

MARK	DESCRIPTION	MOUNTING HEIGHT	REMARKS
A	42" GRAB BAR	CL @ 33" AFF FOR PUBLIC AND STAFF TOILETS; CL @ 19" AFF FOR PRE-K; CL @ 22" AFF FOR GRADES K-3; CL @ 26" AFF FOR GRADES 4-5	REFER TO NOTES 1
B	36" GRAB BAR	CL @ 33" AFF FOR PUBLIC AND STAFF TOILETS; CL @ 19" AFF FOR PRE-K; CL @ 22" AFF FOR GRADES K-3; CL @ 26" AFF FOR GRADES 4-5	REFER TO NOTES 2
C	18" VERTICAL GRAB BAR	CL @ 40" AFF FOR PUBLIC AND STAFF TOILETS; CL @ 26" AFF FOR PRE-K; CL @ 29" AFF FOR GRADES K-3; CL @ 33" AFF FOR GRADES 4-5	REFER TO NOTE 3
D	GRAB BAR 'L' SHAPED	CL @ 34" AFF	REFER TO NOTES
E	MIRROR 18"x30"	BOT @ 40" AFF FOR PUBLIC AND STAFF TOILETS; BOT @ 37" AFF FOR STUDENT TOILETS	
F	SOAP DISPENSER	TOP @ 48" AFF FOR PUBLIC AND STAFF TOILETS; TOP @ 36" AFF FOR PRE-K; TOP @ 40" AFF FOR GRADES K-3; TOP @ 44" AFF FOR GRADES 4-5	REFER TO NOTE 7
G	PAPER TOWEL DISPENSER	BOT @ 44" AFF FOR PUBLIC AND STAFF TOILETS; BOT @ 33" AFF FOR PRE-K; BOT @ 37" AFF FOR GRADES K-3; BOT @ 41" AFF FOR GRADES 4-5	REFER TO NOTE 7
H	TOILET TISSUE HOLDER	CL @ 1'-7" AFF FOR PUBLIC AND STAFF TOILETS; BOT @ 14" AFF FOR PRE-K; BOT @ 16" AFF FOR GRADES K-3; BOT @ 18" AFF FOR GRADES 4-5	REFER TO NOTE 7
J	SANITARY NAPKIN DISPOSAL	OPENING @ 1'-7" AFF	REFER TO NOTE 4
K	SHOWER ROD	CL @ 7'-0" AFF	
L	SHOWER SEAT	TOP @ 18" AFF	REFER TO NOTE 5
M	SHOWER CURTAIN		
N	MIRROR 24" X 46"	BOT @ 18" AFF	
O	44" SS MOP/HOOK SHELF	TOP @ 5'-4" AFF	REFER TO NOTE 6

TOILET SCHEDULE NOTES

1. MOUNT GRAB BAR ON WALL OR TOILET PARTITION AS INDICATED, 12" CLEAR OF WALL WHICH RUNS BEHIND WATER CLOSET.
2. MOUNT GRAB BAR CLEAR OF TANK/FLUSH VALVE. HEIGHT MAY NEED TO BE DIFFERENT THAN INDICATED IN SCHEDULE. COORDINATE WITH PLUMBING FIXTURE PROVIDED. MOUNT 6" FROM FACE OF CONTIGUOUS WALL.
3. FIELD VERIFY FINISH WALL DIMENSION BEFORE INSTALLING GRAB BAR AND RELATED WALL SUPPORTS.
4. MOUNT BOTTOM OF VERTICAL GRAB BAR 3" ABOVE HORIZONTAL GRAB BAR.
5. ONLY PROVIDE SANITARY NAPKIN DISPOSALS IN STAFF, PUBLIC, OT/PT, CLINIC AND SPEC ED TOILETS.
6. PROVIDE ONE IN EACH CUSTODIAN CLOSET. REFER TO 1/8" PLANS FOR ADDITIONAL CUSTODIAN CLOSETS NOT ON THIS SHEET.
7. ACCESSORY TO BE OWNER FURNISHED, CONTRACTOR INSTALLED.

GENERAL NOTES (APPLIES TO THIS SHEET ONLY)

A. TOILET ACCESSORY ITEMS ARE IDENTIFIED BY SYMBOL (X) ON PLANS, LETTERS CORRESPOND TO SCHEDULE ABOVE.

B. REFER TO CASEWORK SHEET A-801 & A-802 FOR ADDITIONAL TOILET ACCESSORIES REQUIRED AS PART OF WORK.

C. GRAB BARS AND ACCESSORIES TO BE MOUNTED IN ACCORDANCE WITH ADA 2010.

D. REFER TO SPEC SECTION 102800 FOR ALL ACCESSORY DESCRIPTIONS.

E. ACTUAL DIMENSIONS MAY VERY WITH APPROVED MANUFACTURER. COORDINATE ALL REVISIONS AS REQUIRED.

F. TOILET PLAN DIMENSIONS TYPICALLY ARE FROM FINISH TO FINISH OR FINISH TO FIXTURE.

G. FIELD VERIFY FINISH WALL DIMENSION BEFORE INSTALLING GRAB BAR AND RELATED WALL SUPPORTS.

H. SELF CLOSING DOORS TO HC STALLS W/ DOOR PULLS BOTH SIDES, TYP.

Received by SBBCC 3.2.2015

S.B. Ballard Construction Company
RRMM ARCHITECTS
WALLER TODD & SADLER ARCHITECTS
The Livas Group Architects, P.C.

MARK	DATE	BY	DESCRIPTION
REVISIONS			

DATE	03-03-2015
PROJECT	10105.22
DESIGNED	LRS
DRAWN	HJH
CHECKED	DRJ

COMMONWEALTH OF VIRGINIA
C. DUANE M. HARVER
Lic. No. 6310
03/03/15
ARCHITECT

PROJECT
CITY OF NORFOLK AND NORFOLK PUBLIC SCHOOLS
BROAD CREEK IB ELEMENTARY SCHOOL
NORFOLK, VIRGINIA

SBBCC PROJECT NUMBER NPS-2014-317
VIRGINIA DEPARTMENT OF EDUCATION 118-46-00-100

DRAWING
ENLARGED TOILET PLANS

SHEET
A-406

C:\Users\rgossett\Documents\10105-22 Broad Creek Elem School - Central_cgossett.rvt
3/3/2015 5:36:48 PM

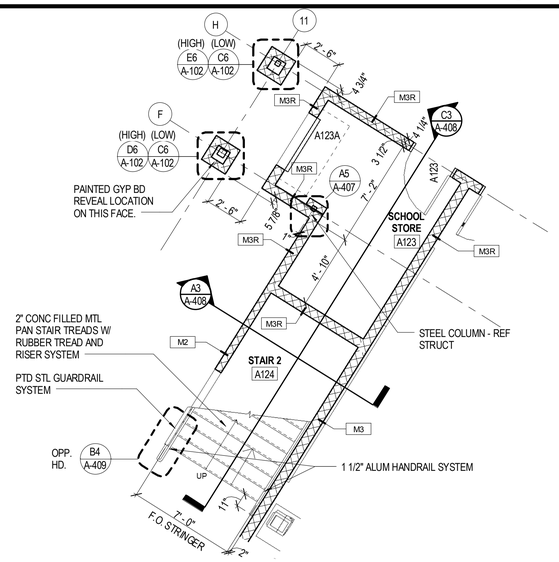

D1 A-407 ENLARGED STAIR 2 FIRST FLOOR PLAN
SCALE: 1/4" = 1'-0"

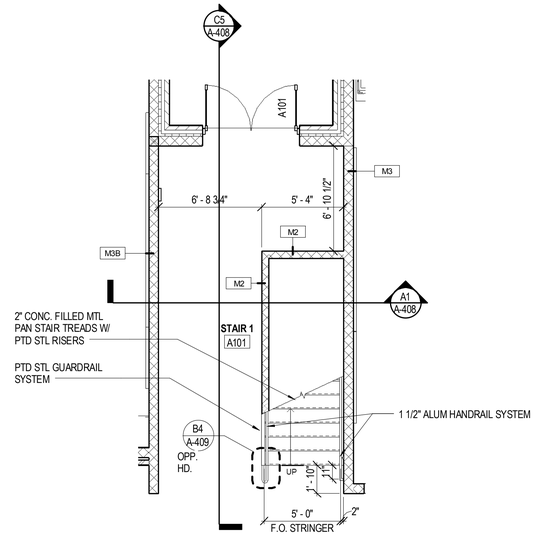

D3 A-407 ENLARGED STAIR 1 FIRST FLOOR PLAN
SCALE: 1/4" = 1'-0"

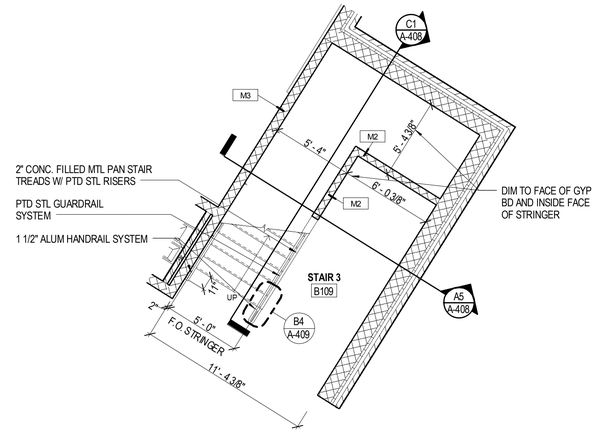

D5 A-407 ENLARGED STAIR 3 FIRST FLOOR PLAN
SCALE: 1/4" = 1'-0"

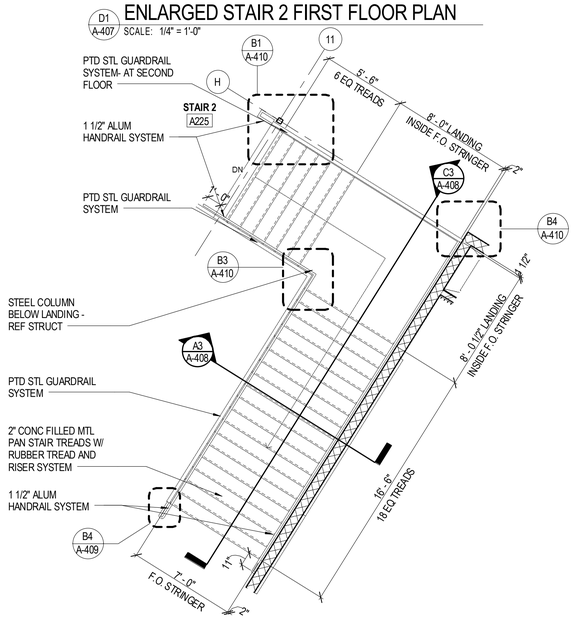

B1 A-407 ENLARGED STAIR 2 SECOND FLOOR PLAN
SCALE: 1/4" = 1'-0"

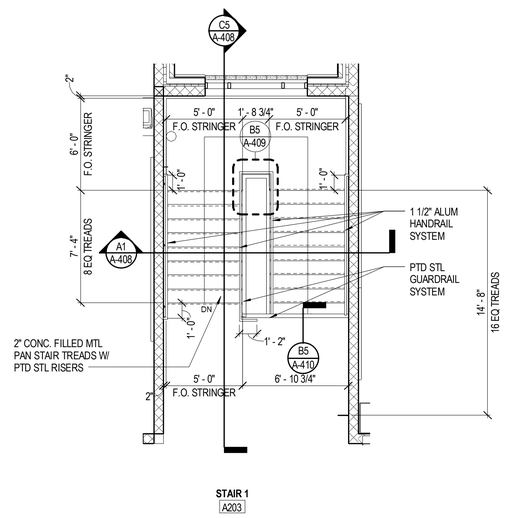

B3 A-407 ENLARGED STAIR 1 SECOND FLOOR PLAN
SCALE: 1/4" = 1'-0"

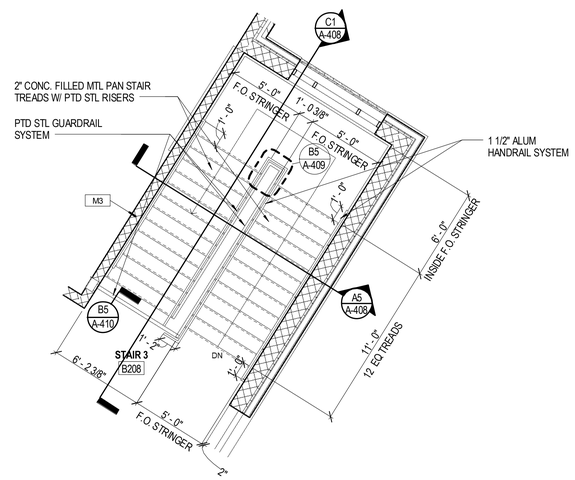

B5 A-407 ENLARGED STAIR 3 SECOND FLOOR PLAN
SCALE: 1/4" = 1'-0"

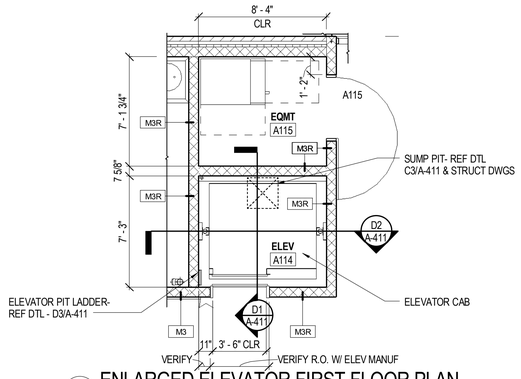

A1 A-407 ENLARGED ELEVATOR FIRST FLOOR PLAN
SCALE: 1/4" = 1'-0"

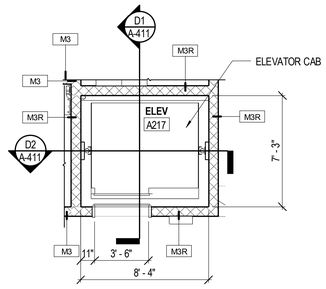

A3 A-407 ENLARGED ELEVATOR SECOND FLOOR PLAN
SCALE: 1/4" = 1'-0"

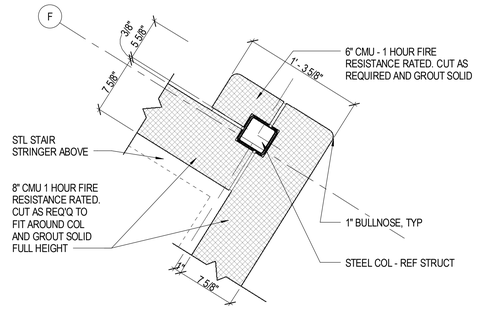

A5 A-407 PLAN DETAIL
SCALE: 1 1/2" = 1'-0"

Received by SBBCC 3.2.2015

S.B. Ballard Construction Company
RRMM ARCHITECTS
WALLER TODD & SADLER ARCHITECTS
The Livas Group Architects, P.C.

MARK	DATE	BY	DESCRIPTION
REVISIONS			

DATE	03-03-2015
PROJECT	10105.22
DESIGNED	LRS
DRAWN	HJH
CHECKED	DRJ

COMMONWEALTH OF VIRGINIA
C. DUANE M. HARVER
Lic. No. 6310
03/03/15
ARCHITECT

PROJECT
CITY OF NORFOLK AND NORFOLK PUBLIC SCHOOLS
BROAD CREEK IB ELEMENTARY SCHOOL
NORFOLK, VIRGINIA

SBBCC PROJECT NUMBER: NPS-2014-317
VIRGINIA DEPARTMENT OF EDUCATION: 118-46-00-100

DRAWING
ENLARGED STAIR AND ELEVATOR PLANS

SHEET
A-407

C:\Users\rgossett\Documents\10105.22 Broad Creek Elem School - Central_rgossett.rvt
3/3/2015 5:37:02 PM

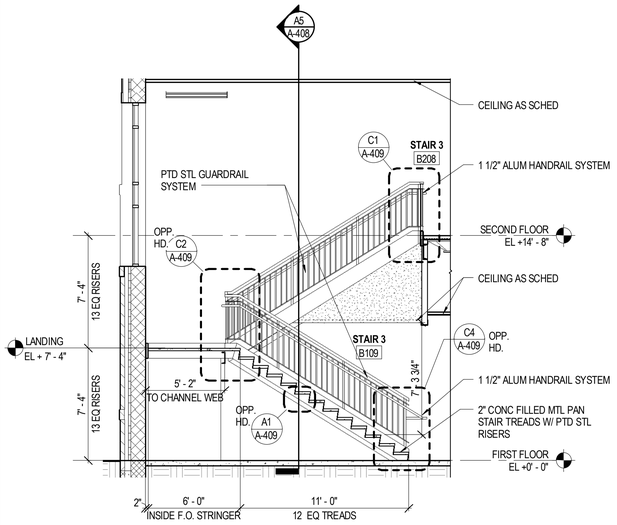

C1 A-408 STAIR 3 SECTION
SCALE: 1/4" = 1'-0"

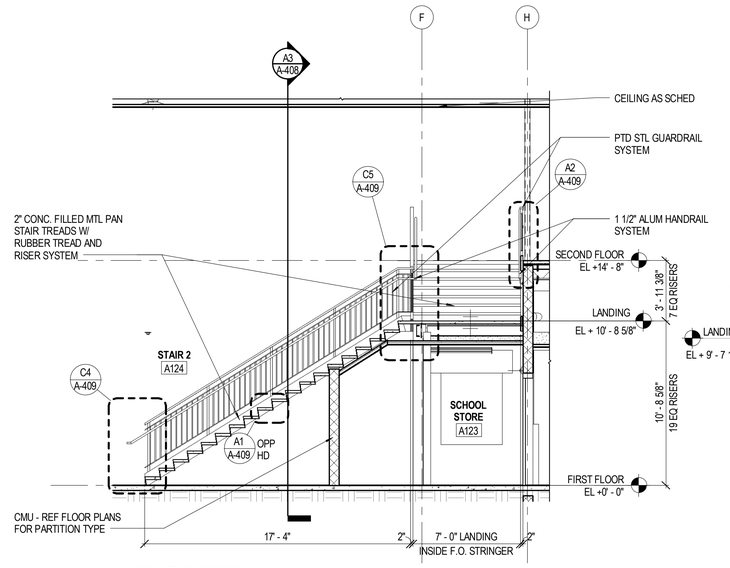

C3 A-408 STAIR 2 SECTION
SCALE: 1/4" = 1'-0"

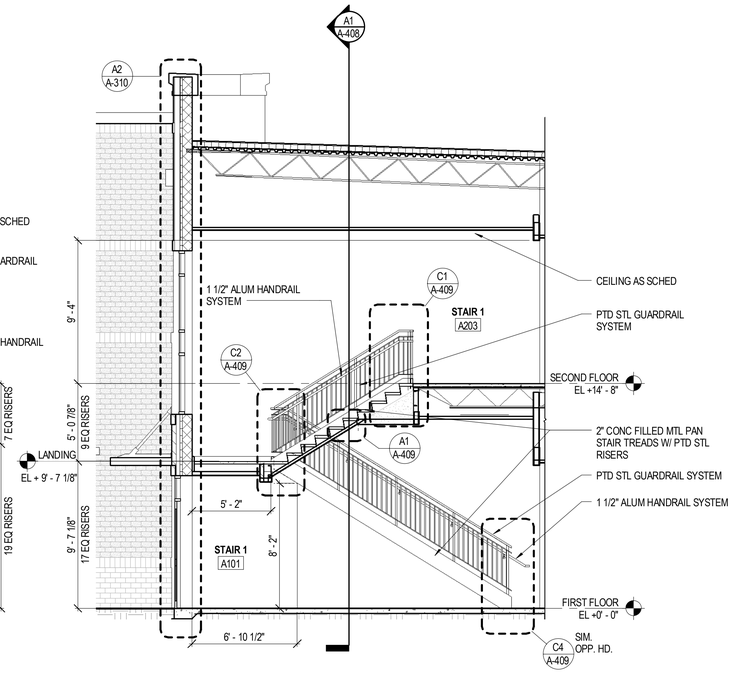

C5 A-408 STAIR 1 SECTION
SCALE: 1/4" = 1'-0"

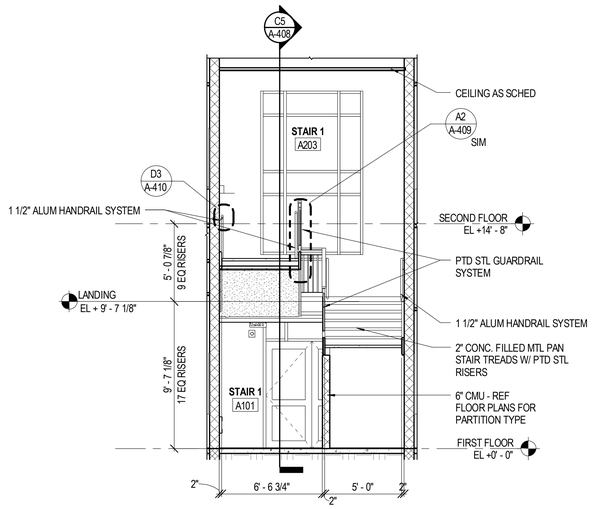

A1 A-408 STAIR 1 SECTION
SCALE: 1/4" = 1'-0"

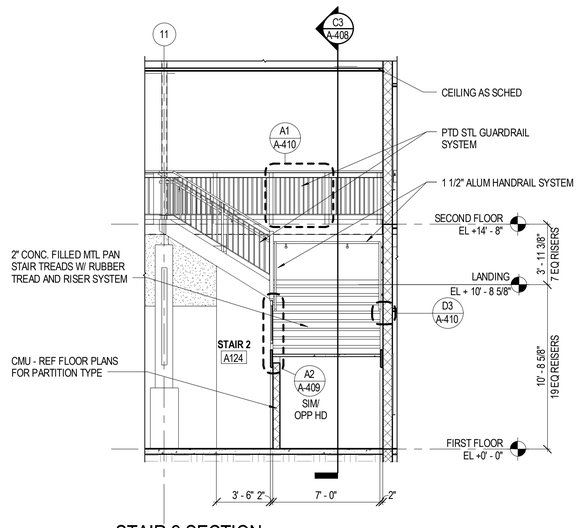

A3 A-408 STAIR 2 SECTION
SCALE: 1/4" = 1'-0"

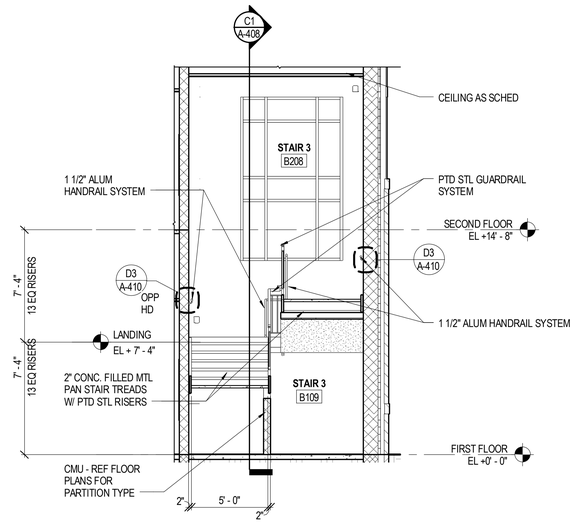

A5 A-408 STAIR 3 SECTION 2
SCALE: 1/4" = 1'-0"

Received by SBBCC 3.2.2015

S.B. Ballard Construction Company
RRMM ARCHITECTS
WALLER TODD & SADLER ARCHITECTS
The Livas Group Architects, P.C.

MARK	DATE	REVISIONS	BY	DESCRIPTION

DATE	03-03-2015
PROJECT	10105.22
DESIGNED	LRS
DRAWN	HJH
CHECKED	DRJ

COMMONWEALTH OF VIRGINIA
DUANE M. HARVER
Lic. No. 6310
03/03/15
ARCHITECT

SBBCC PROJECT NUMBER: NPS-2014-317
VIRGINIA DEPARTMENT OF EDUCATION: 118-46-00-100

PROJECT
CITY OF NORFOLK AND NORFOLK PUBLIC SCHOOLS
BROAD CREEK IB ELEMENTARY SCHOOL
NORFOLK, VIRGINIA

DRAWING
STAIR SECTIONS

SHEET
A-408

C:\Users\rgossett\Documents\10105-22 Broad Creek Elem School - Central_rgossett.rvt
3/3/2015 5:37:13 PM

NOTE: GRIND ALL WELDS & EDGES SMOOTH - TYP

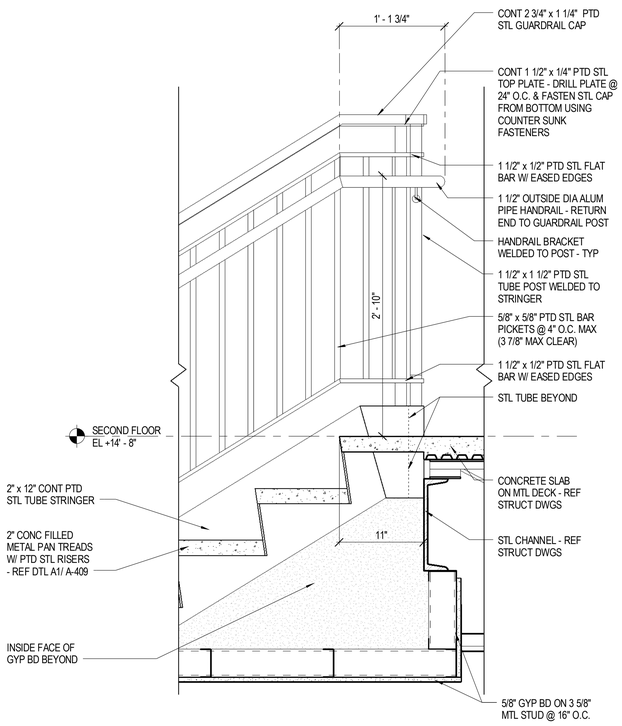

C1 A-409 STAIR 1 SECTION 1 - TOP LANDING
SCALE: 1 1/2" = 1'-0"

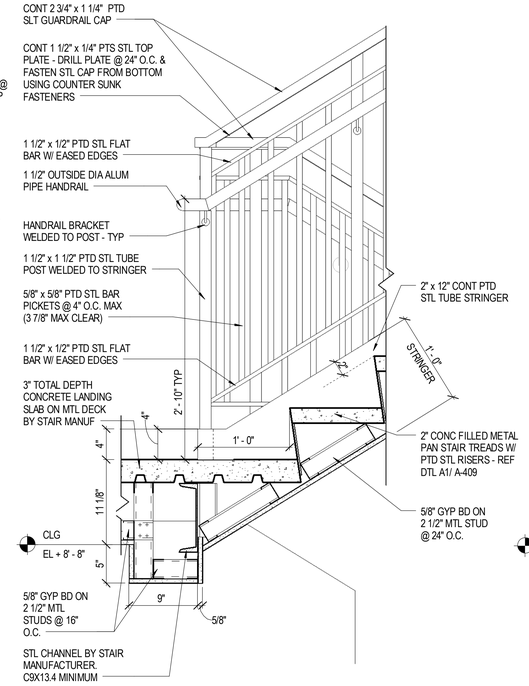

C2 A-409 STAIR 1 SECTION 1 - INTERMEDIATE
SCALE: 1 1/2" = 1'-0"

NOTE: GRIND ALL WELDS & EDGES SMOOTH - TYP

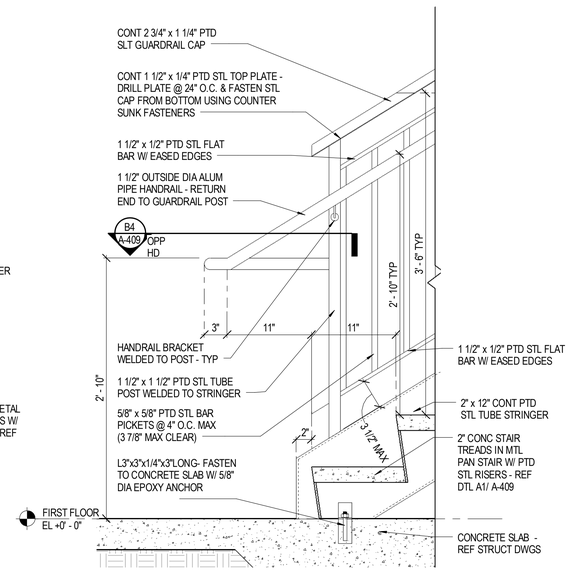

C4 A-409 STAIR 2 SECTION 1 - BOTTOM LANDING
SCALE: 1 1/2" = 1'-0"

NOTE: GRIND ALL WELDS & EDGES SMOOTH - TYP

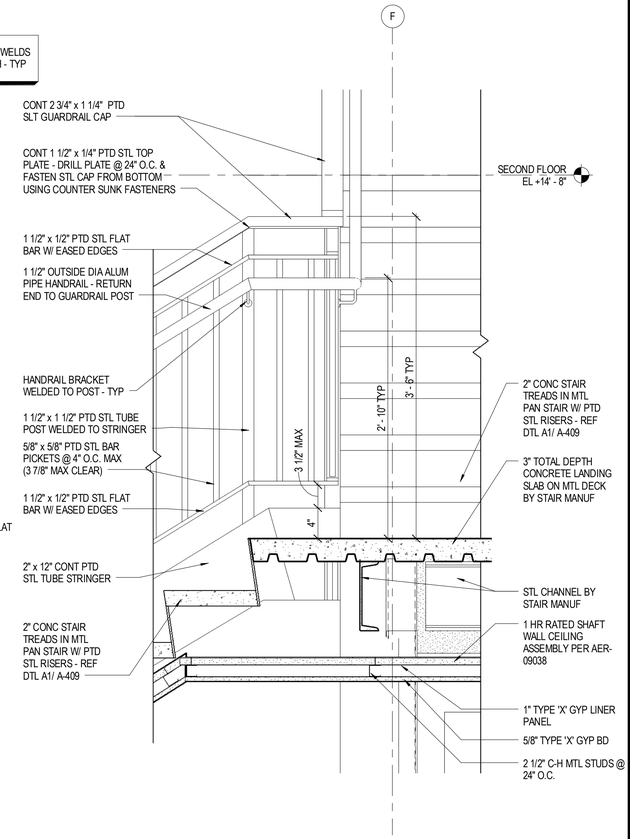

C5 A-409 STAIR 2 SECTION 1 - INTERMEDIATE
SCALE: 1 1/2" = 1'-0"

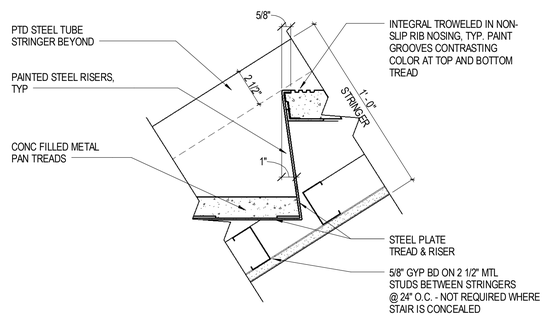

B1 A-409 TREAD AND NOSING DETAIL AT STAIRS 1 AND 3
SCALE: 3" = 1'-0"

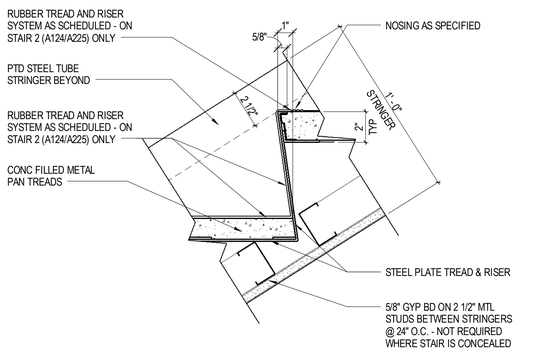

A1 A-409 TREAD AND NOSING DETAIL AT STAIR 2
SCALE: 3" = 1'-0"

NOTE: GRIND ALL WELDS & EDGES SMOOTH - TYP

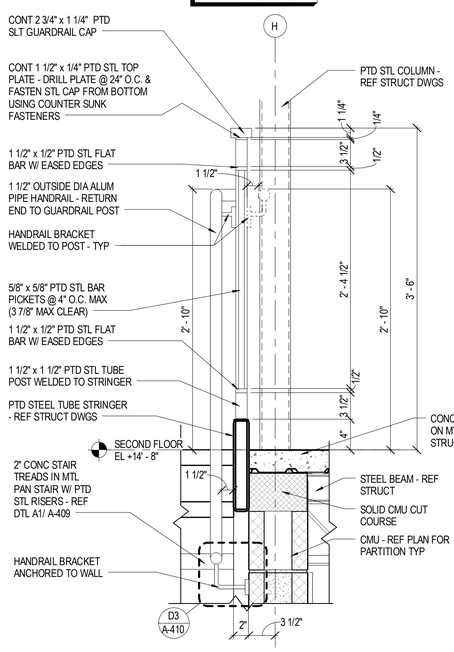

A2 A-409 STAIR 2 SECTION 1 - GUARDRAIL LANDING
SCALE: 1 1/2" = 1'-0"

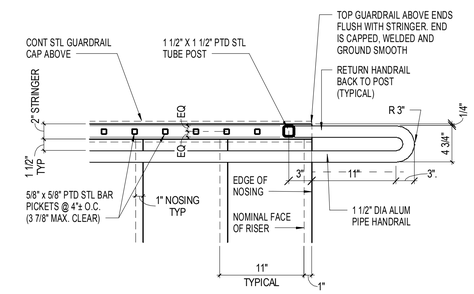

B4 A-409 RAILING POST DETAIL @ FIRST FLOOR
SCALE: 1 1/2" = 1'-0"

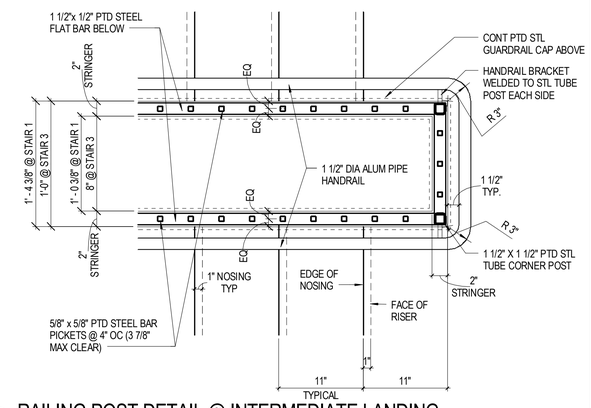

B5 A-409 RAILING POST DETAIL @ INTERMEDIATE LANDING
SCALE: 1 1/2" = 1'-0"

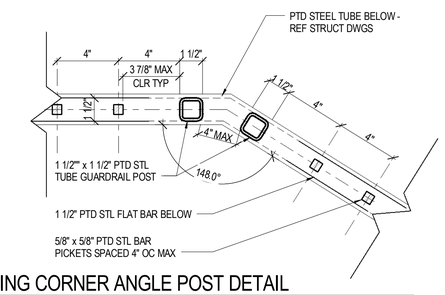

A4 A-409 RAILING CORNER ANGLE POST DETAIL
SCALE: 3" = 1'-0"

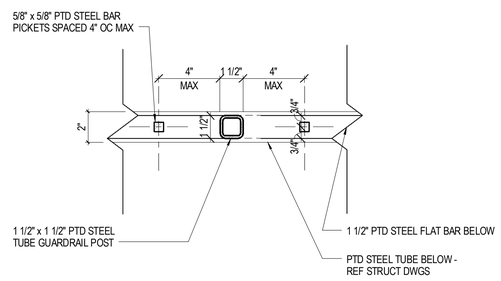

A5 A-409 RAILING POST DETAIL
SCALE: 3" = 1'-0"

Received by SBBCC 3.2.2015

S.B. Ballard Construction Company
RRMM ARCHITECTS
WALLER TODD & SADLER ARCHITECTS
The Livas Group Architects, P.C.

MARK	DATE	DESCRIPTION	BY
		REVISIONS	

DATE	03-03-2015
PROJECT	10105.22
DESIGNED	LRS
DRAWN	HJH
CHECKED	DRJ

COMMONWEALTH OF VIRGINIA
C. DUANE M. HARVER
Lic. No. 6310
03/03/15
ARCHITECT

PROJECT
CITY OF NORFOLK AND NORFOLK PUBLIC SCHOOLS
BROAD CREEK IB ELEMENTARY SCHOOL
NORFOLK, VIRGINIA

SBBCC PROJECT NUMBER: NFS-2014-317
VIRGINIA DEPARTMENT OF EDUCATION: 118-48-00-100

DRAWING
STAIR AND RAILING DETAILS

SHEET
A-409

C:\Users\rgossett\Documents\10105-22 Broad Creek Elem School - Central_rgossett.rvt
3/3/2015 5:37:24 PM

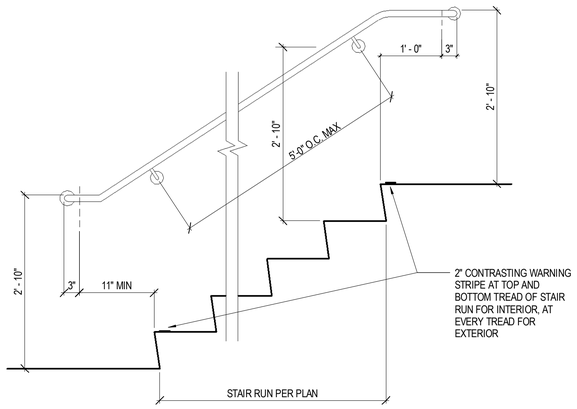

STRUCTURAL STRENGTH: HANDRAILS SHALL BE CAPABLE OF WITHSTANDING A LOAD OF AT LEAST 250 LBS. APPLIED IN ANY DIRECTION AT ANY POINT ON THE RAIL

D1 / A-410 PIPE HANDRAIl ELEVATIONS- WALL MOUNTED
SCALE: 1" = 1'-0"

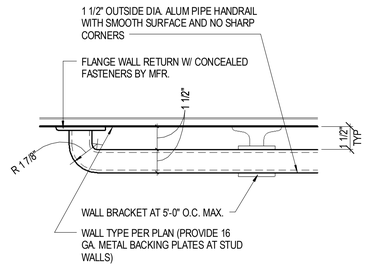

A TYPICAL PLAN - WALL MOUNTED HANDRAIL TERMINATION
N.T.S.

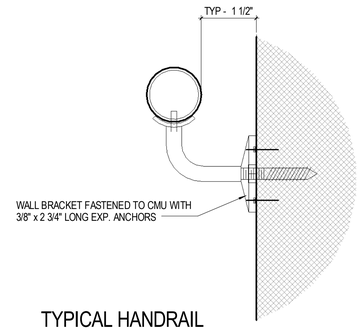

B TYPICAL HANDRAIL SECTION - CMU WALL BRACKET
N.T.S.

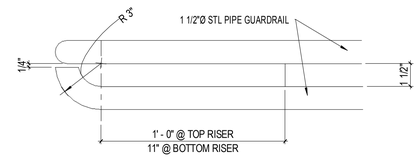

C HANDRAIL TERMINATION
N.T.S.

D3 / A-410 PIPE HANDRAIL DETAILS
SCALE: 3" = 1'-0"

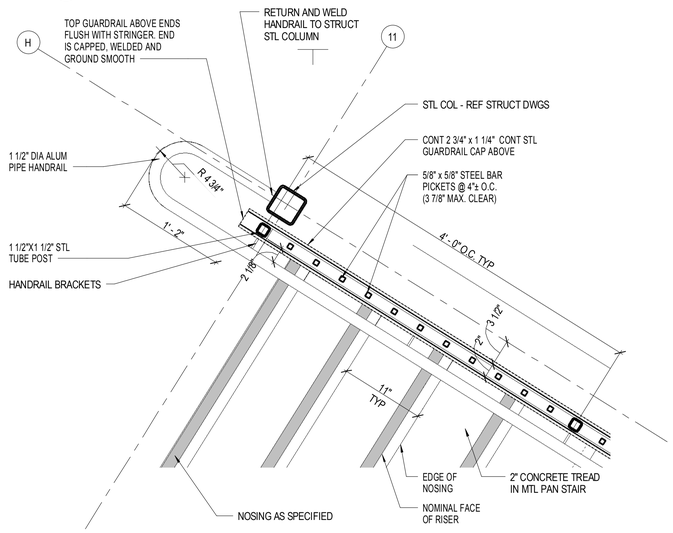

B1 / A-410 TOP LANDING HANDRAIL @ GUARDRAIL
SCALE: 1 1/2" = 1'-0"

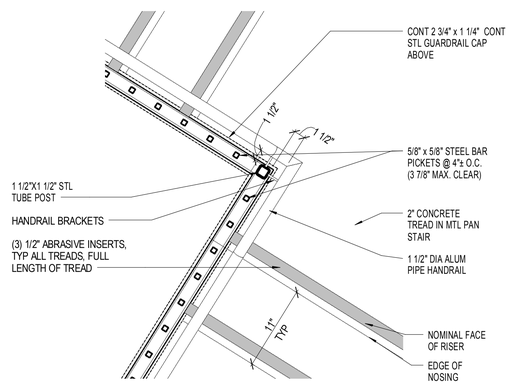

B3 / A-410 INTERMEDIATE LANDING HANDRAIL
SCALE: 1 1/2" = 1'-0"

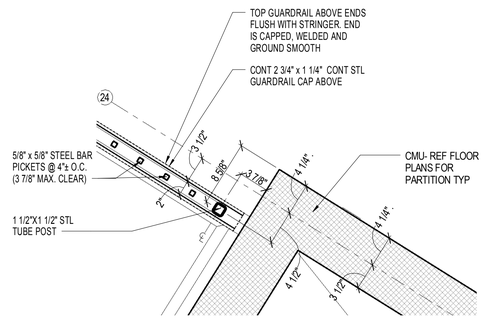

B4 / A-410 GUARDRAIL TERMINATION @ WALL
SCALE: 1 1/2" = 1'-0"

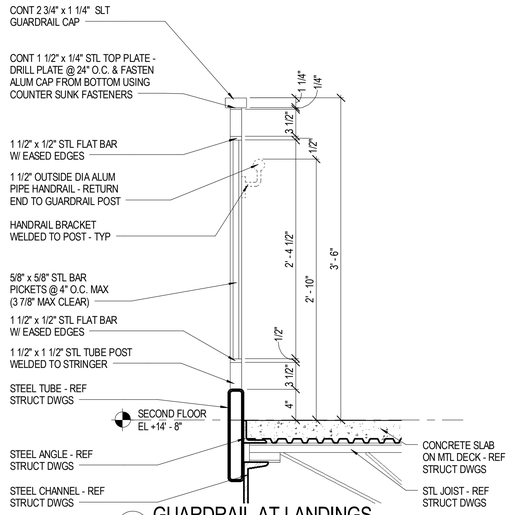

B5 / A-410 GUARDRAIL AT LANDINGS
SCALE: 1 1/2" = 1'-0"

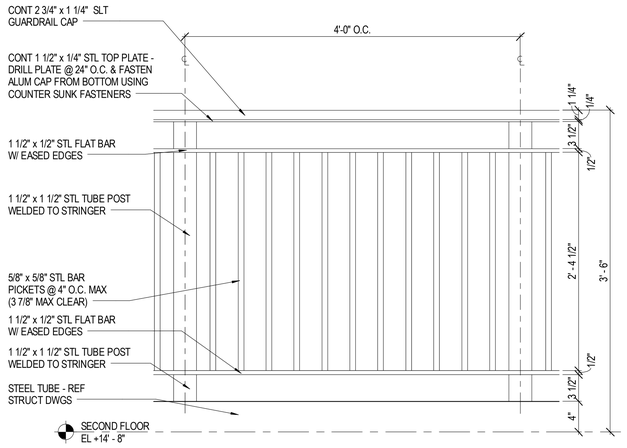

A1 / A-410 GUARDRAIL ELEVATION
SCALE: 1 1/2" = 1'-0"

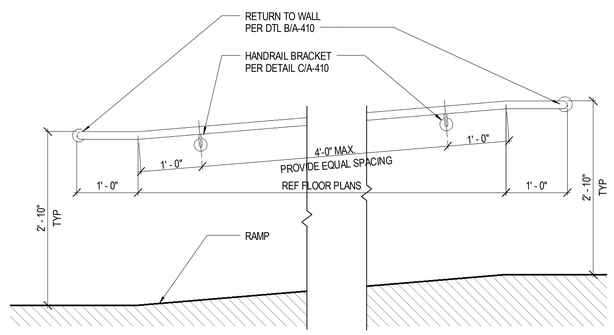

STRUCTURAL STRENGTH: HANDRAILS SHALL BE CAPABLE OF WITHSTANDING A LOAD OF AT LEAST 250 LBS. APPLIED IN ANY DIRECTION AT ANY POINT ON THE RAIL

A3 / A-410 RAMP TYPICAL DETAILING
SCALE: 1" = 1'-0"

Received by SBBCC 3.2.2015

S.B. Ballard Construction Company
RRMM ARCHITECTS
WALLER TODD & SADLER ARCHITECTS
The Livas Group Architects, P.C.

MARK	DATE	BY	DESCRIPTION
REVISIONS			

DATE	03-03-2015
PROJECT	10105.22
DESIGNED	LRS
DRAWN	HJH
CHECKED	DRJ

COMMONWEALTH OF VIRGINIA
DUANE M. HARVER
Lic. No. 6310
03/03/15
ARCHITECT

SBBCC PROJECT NUMBER: NPS-2014-317
VIRGINIA DEPARTMENT OF EDUCATION: 118-46-00-100

PROJECT
CITY OF NORFOLK AND NORFOLK PUBLIC SCHOOLS
BROAD CREEK IB ELEMENTARY SCHOOL
NORFOLK, VIRGINIA

DRAWING
STAIR AND RAILING DETAILS

SHEET
A-410

C:\Users\rgossett\Documents\10105-22 Broad Creek Elem School - Central_rgossett.rvt
3/3/2015 5:37:33 PM

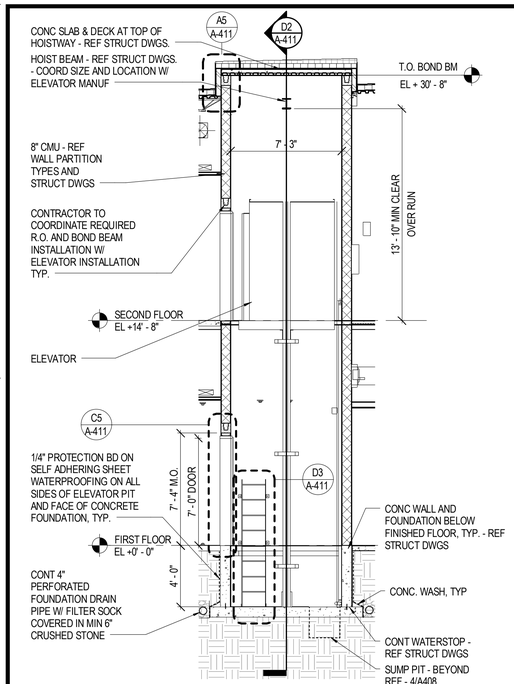

D1 A-411 ELEVATOR SECTION
SCALE: 1/4" = 1'-0"

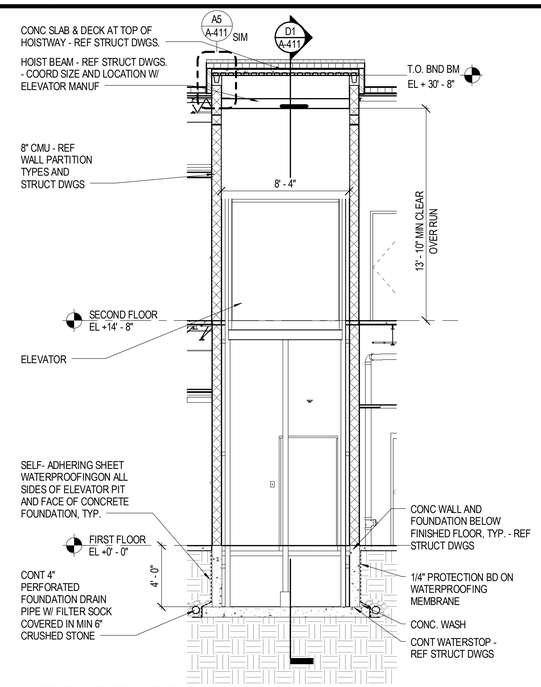

D2 A-411 ELEVATOR CROSS SECTION
SCALE: 1/4" = 1'-0"

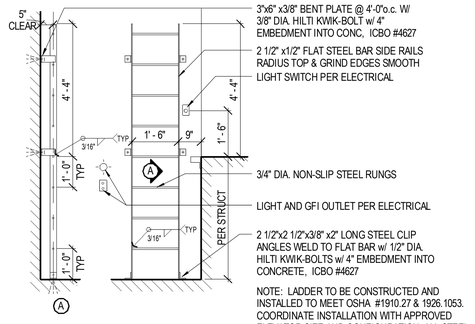

D3 A-411 ELEVATOR PIT LADDERSECTION & ELEVATION
SCALE: 1/2" = 1'-0"

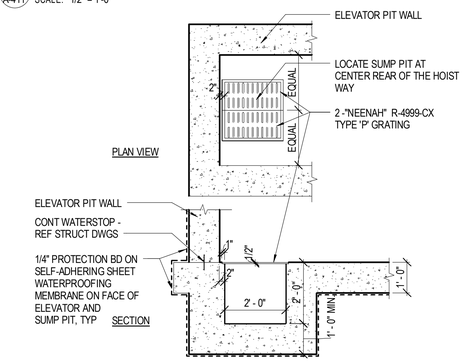

C3 A-411 ELEVATOR SUMP PIT
SCALE: 1/2" = 1'-0"

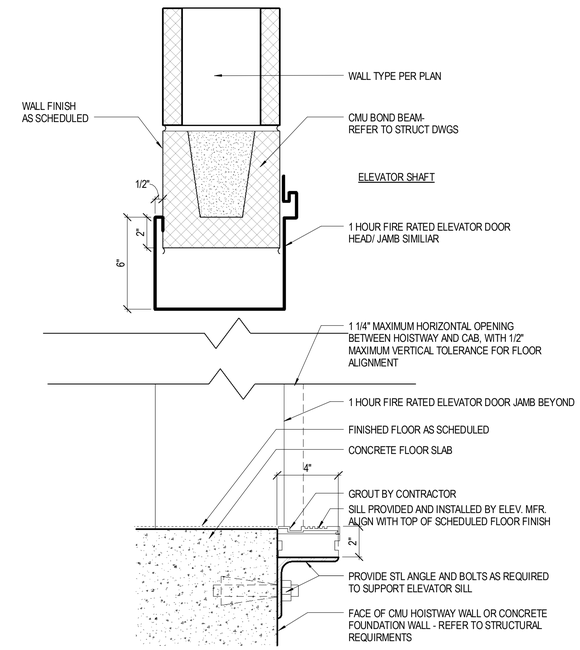

C5 A-411 ELEVATOR DOOR HEAD/ SILL
SCALE: 3" = 1'-0"

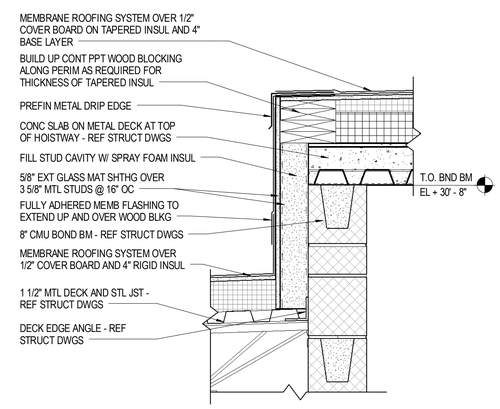

A5 A-411 ELEVATOR HOISTWAY CAP DETAIL
SCALE: 1 1/2" = 1'-0"

Received by SBBCC 3.2.2015

S.B. Ballard Construction Company
RRMM ARCHITECTS
WALLER TODD & SADLER ARCHITECTS
The Livas Group Architects, P.C.

MARK	DATE	BY	DESCRIPTION
REVISIONS			

DATE	03-03-2015
PROJECT	10105.22
DESIGNED	LRS
DRAWN	HJH
CHECKED	DRJ

COMMONWEALTH OF VIRGINIA
DUANE M. HARVER
Lic. No. 6310
03/03/15
ARCHITECT

SBBCC PROJECT NUMBER: NPS-2014-317
VIRGINIA DEPARTMENT OF EDUCATION: 118-46-00-100

PROJECT
CITY OF NORFOLK AND NORFOLK PUBLIC SCHOOLS
BROAD CREEK IB ELEMENTARY SCHOOL
NORFOLK, VIRGINIA

DRAWING
ELEVATOR DETAILS

SHEET
A-411

C:\Users\rgossett\Documents\10105-22 Broad Creek Elem School - Central_cgossett.rvt
3/3/2015 5:37:39 PM

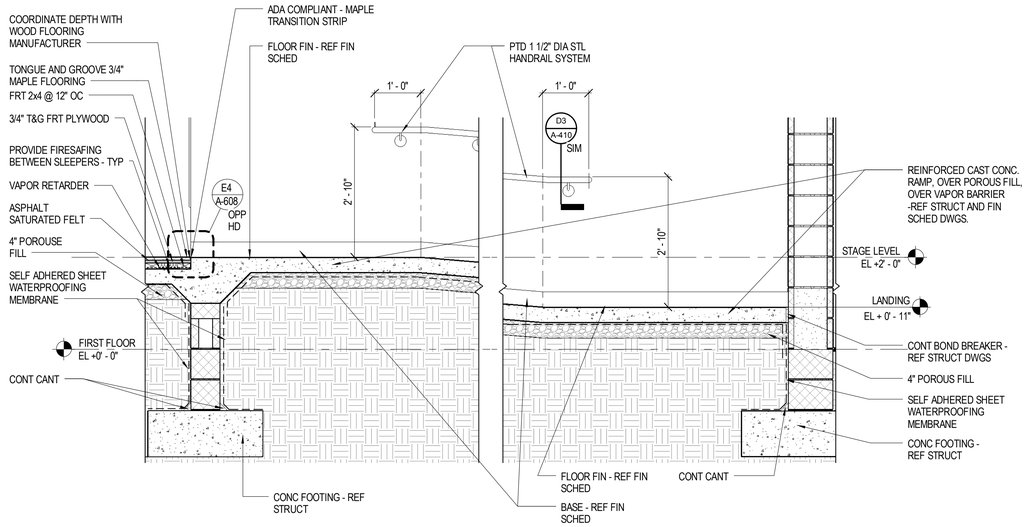

D1 A-412 RAMP SECTION
SCALE: 3/4" = 1'-0"

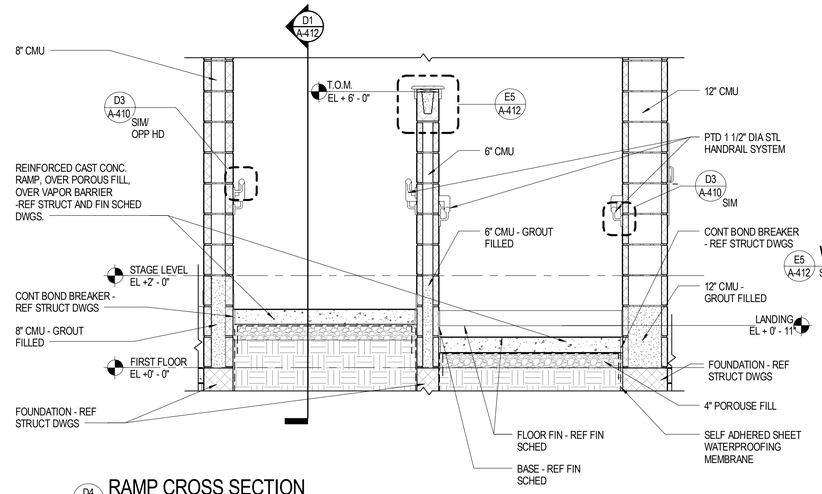

D4 A-412 RAMP CROSS SECTION
SCALE: 3/4" = 1'-0"

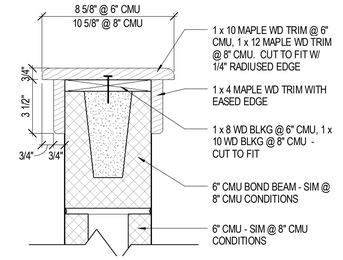

E5 A-412 WOOD CAP DETAIL
SCALE: 3" = 1'-0"

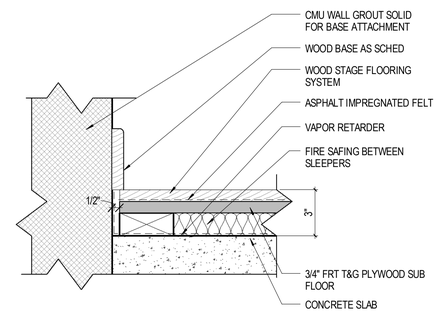

C4 A-412 STAGE FLOOR DETAIL
SCALE: 3" = 1'-0"

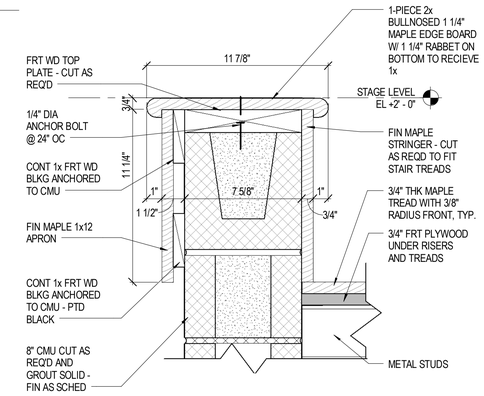

C5 A-412 DETAIL
SCALE: 3" = 1'-0"

Received by SBBCC 3.2.2015

1/32" = 1'-0" 0' 16' 32' 48'
1/16" = 1'-0" 0' 4' 8' 16' 24'
3/32" = 1'-0" 0' 4' 8' 16'
1/8" = 1'-0" 0' 4' 8' 12'
1/4" = 1'-0" 0' 2' 4' 6'
3/8" = 1'-0" 0' 1' 2' 3' 4'
1/2" = 1'-0" 0' 6" 1' 2' 3'
3/4" = 1'-0" 0' 6" 1' 2'
1" = 1'-0" 0' 3" 6" 9" 1' 1.5'
1 1/2" = 1'-0" 0' 3" 6" 9" 1'
3" = 1'-0" 0' 1" 2" 3" 4" 5" 6"
6" = 1'-0" 0' 1" 2" 3"
12" = 1'-0" 0' 1" 1.5"

S.B. Ballard Construction Company
RRMM ARCHITECTS
WALLER TODD & SADLER ARCHITECTS
The Livas Group Architects, P.C.

MARK	DATE	REVISIONS	BY	DESCRIPTION

DATE	03-03-2015
PROJECT	10105.22
DESIGNED	LRS
DRAWN	HJH
CHECKED	DRJ

COMMONWEALTH OF VIRGINIA
C. DUANE M. HARVER
Lic. No. 6310
03/03/15
ARCHITECT

PROJECT
CITY OF NORFOLK AND NORFOLK PUBLIC SCHOOLS
BROAD CREEK IB ELEMENTARY SCHOOL
NORFOLK, VIRGINIA
SBBCC PROJECT NUMBER: NFS-2014-317
VIRGINIA DEPARTMENT OF EDUCATION: 118-48-00-100

DRAWING
RAMP DETAILS

SHEET
A-412

C:\Users\cgossett\Documents\10105-22 Broad Creek Elem School - Central_cgossett.rvt
3/3/2015 5:37:46 PM

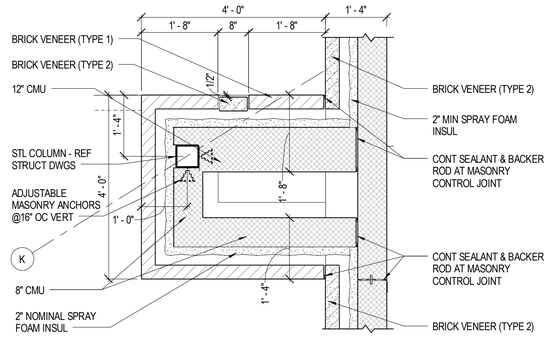

D1 A-501 PLAN DETAIL AT BRICK COLUMN WRAP AT CORNER
SCALE: 3/4" = 1'-0"

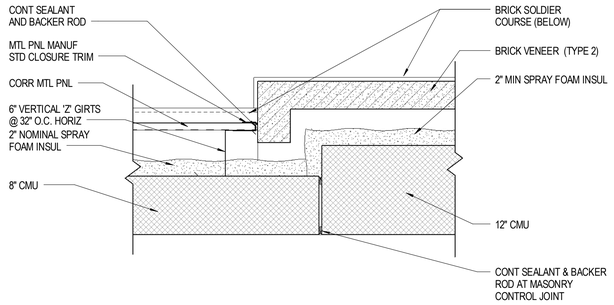

D3 A-501 PLAN DETAIL AT METAL PANEL AND BRICK
SCALE: 1 1/2" = 1'-0"

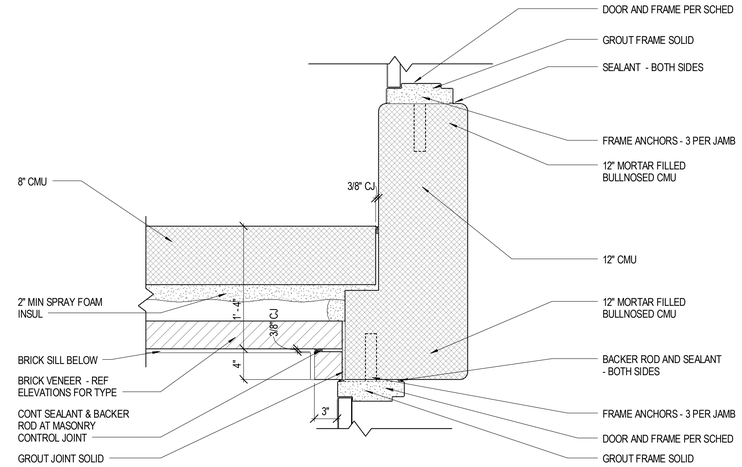

D5 A-501 PLAN DETAIL
SCALE: 1 1/2" = 1'-0"

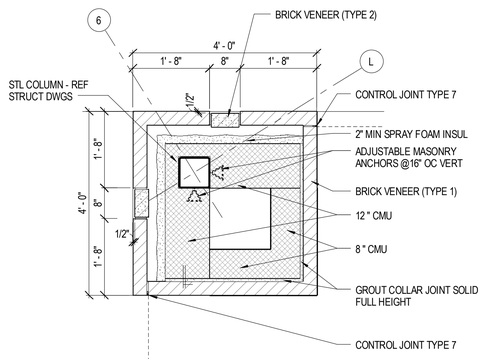

C1 A-501 PLAN DETAIL AT BRICK COLUMN WRAP
SCALE: 3/4" = 1'-0"

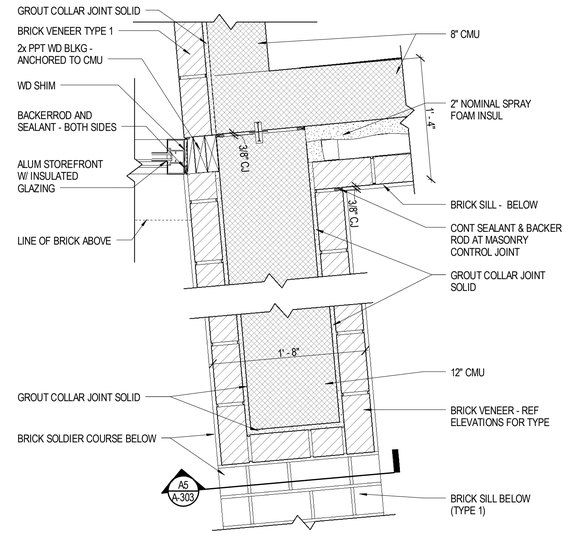

C3 A-501 PLAN DETAIL
SCALE: 1 1/2" = 1'-0"

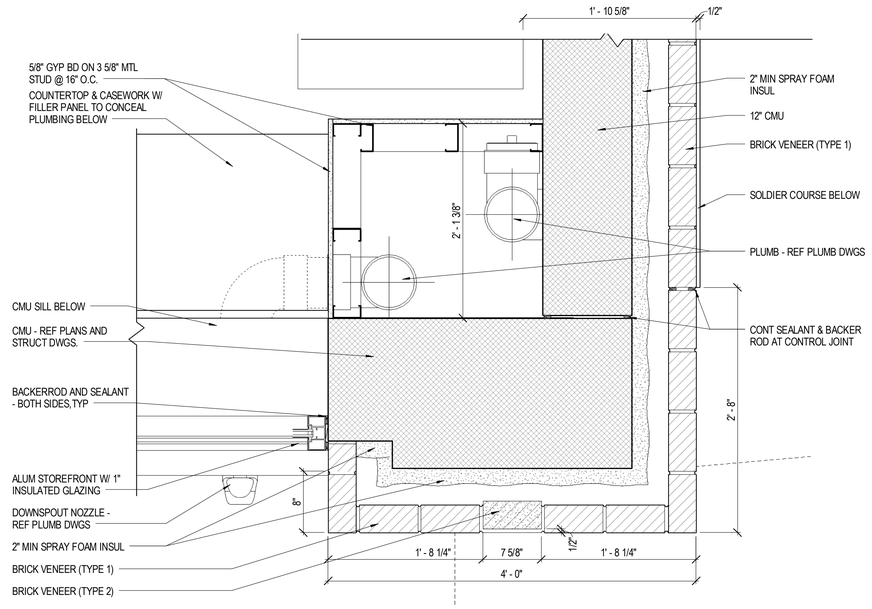

B5 A-501 PLAN DETAIL
SCALE: 1 1/2" = 1'-0"

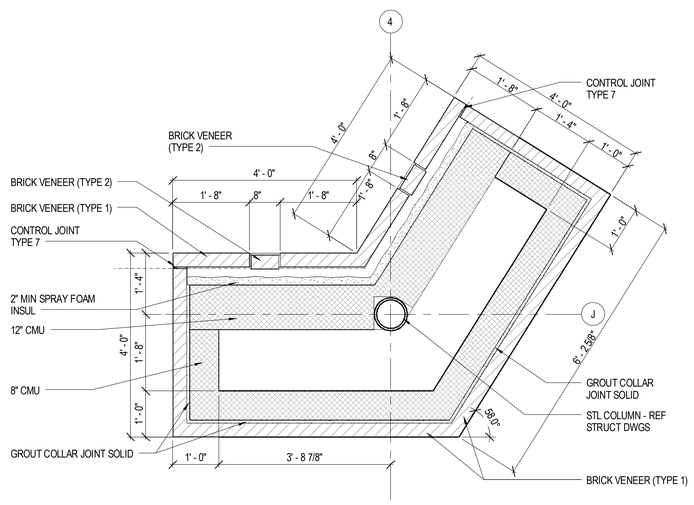

A1 A-501 PLAN DETAIL AT INTERSECTION
SCALE: 3/4" = 1'-0"

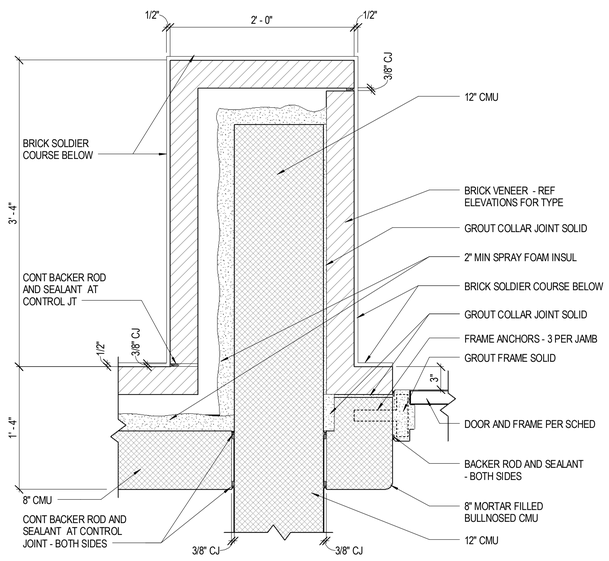

A3 A-501 PLAN DETAIL
SCALE: 1 1/2" = 1'-0"

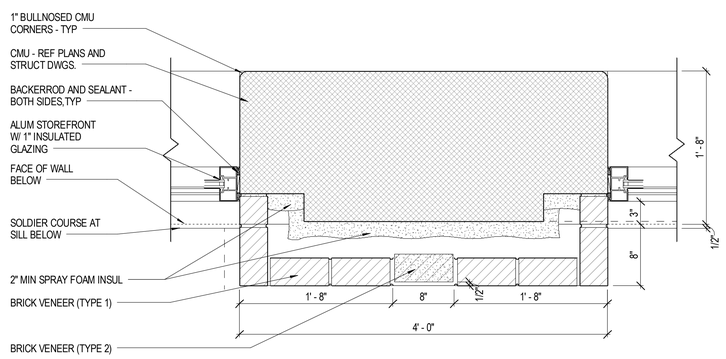

A5 A-501 PLAN DETAIL
SCALE: 1 1/2" = 1'-0"

Received by SBBCC 3.2.2015

S.B. Ballard Construction Company
RRMM ARCHITECTS
WALLER TODD & SADLER ARCHITECTS
The Livas Group Architects, P.C.

MARK	DATE	DESCRIPTION	BY
REVISIONS			

DATE	03-03-2015
PROJECT	10105.22
DESIGNED	LRS
DRAWN	HJH
CHECKED	DRJ

COMMONWEALTH OF VIRGINIA
C. DUANE M. HARVER
Lic. No. 6310
03/03/15
ARCHITECT

SBBCC PROJECT NUMBER: NFS-2014-317
VIRGINIA DEPARTMENT OF EDUCATION: 118-48-00-100

PROJECT
CITY OF NORFOLK AND NORFOLK PUBLIC SCHOOLS
BROAD CREEK IB ELEMENTARY SCHOOL
NORFOLK, VIRGINIA

DRAWING
PLAN DETAILS

SHEET
A-501

C:\Users\rgossett\Documents\10105-22 Broad Creek Elem School - Central_rgossett.rvt
3/3/2015 5:37:57 PM

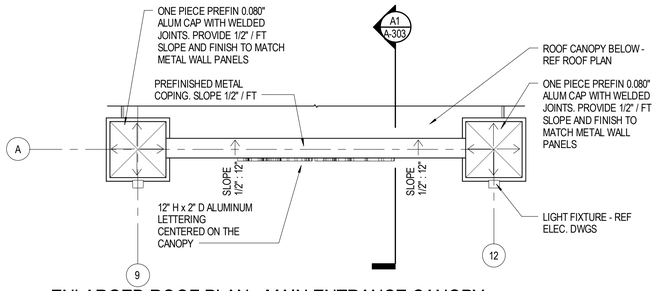

D1 A-502 ENLARGED ROOF PLAN - MAIN ENTRANCE CANOPY
SCALE: 1/4" = 1'-0"

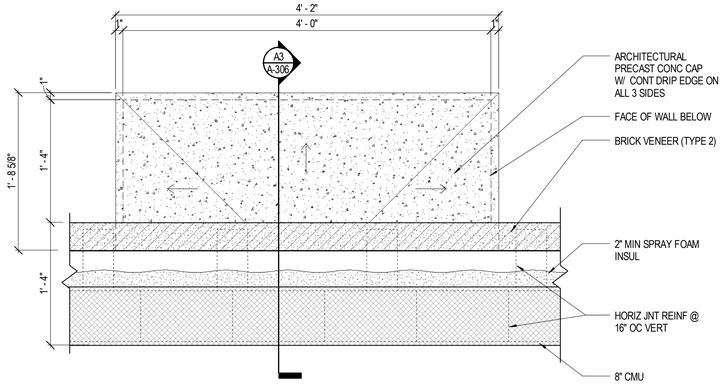

D3 A-502 PLAN DETAIL
SCALE: 1 1/2" = 1'-0"

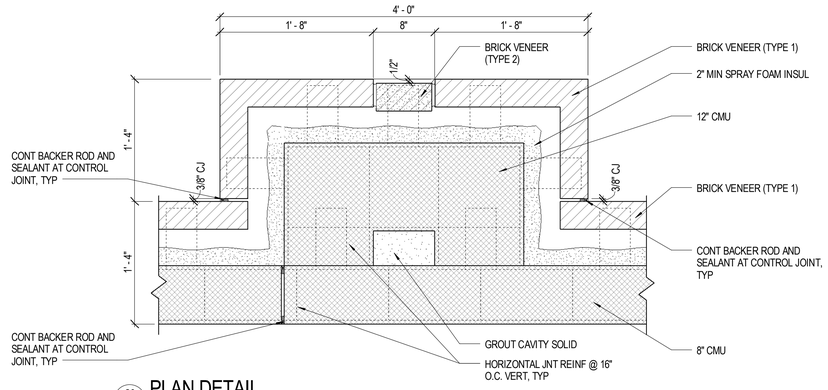

C3 A-502 PLAN DETAIL
SCALE: 1 1/2" = 1'-0"

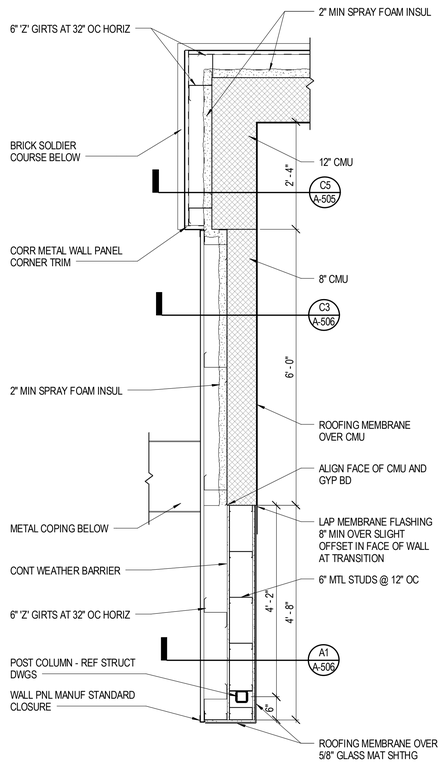

A1 A-502 HIGH PARAPET PLAN DETAIL
SCALE: 3/4" = 1'-0"

Received by SBBCC 3.2.2015

S.B. Ballard Construction Company
RRMM ARCHITECTS
WALLER TODD & SADLER ARCHITECTS
The Livas Group Architects, P.C.

MARK	DATE	BY	DESCRIPTION
REVISIONS			

DATE	03-03-2015
PROJECT	10105.22
DESIGNED	LRS
DRAWN	HJH
CHECKED	DRJ

COMMONWEALTH OF VIRGINIA
DUANE M. HARVER
Lic. No. 6310
03/03/15
ARCHITECT

PROJECT
CITY OF NORFOLK AND NORFOLK PUBLIC SCHOOLS
BROAD CREEK IB ELEMENTARY SCHOOL
NORFOLK, VIRGINIA
SBBCC PROJECT NUMBER: NPS-2014-317
VIRGINIA DEPARTMENT OF EDUCATION: 118-48-00-100

DRAWING
PLAN DETAILS

SHEET
A-502

C:\Users\ggossett\Documents\10105-22 Broad Creek Elem School - Central_cgossett.rvt
3/3/2015 5:38:03 PM

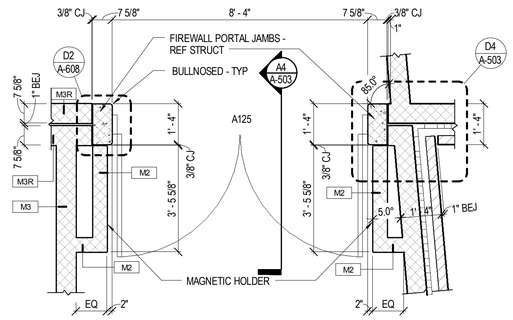

D1 A-503 ENLARGED PORTAL PLAN - DOOR A125
SCALE: 1/2" = 1'-0"

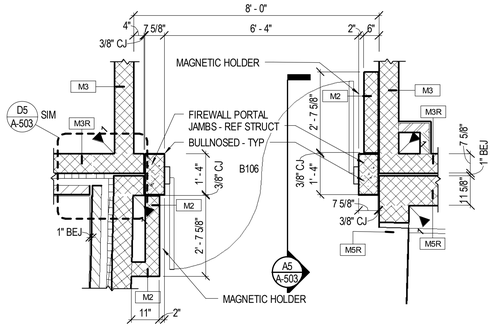

D2 A-503 ENLARGED PORTAL PLAN - DOOR B106
SCALE: 1/2" = 1'-0"

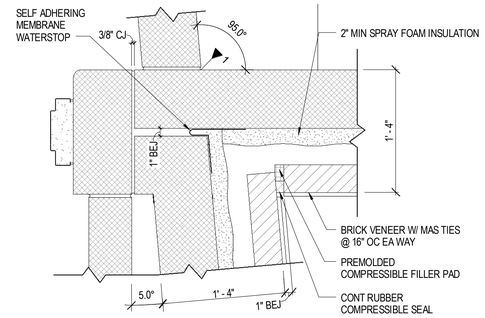

D4 A-503 PLAN DETAIL
SCALE: 1 1/2" = 1'-0"

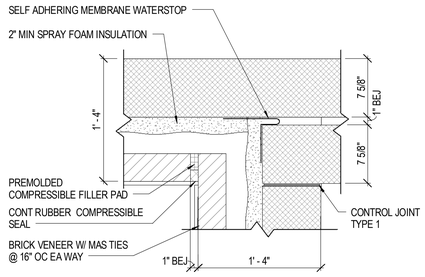

D5 A-503 PLAN DETAIL
SCALE: 1 1/2" = 1'-0"

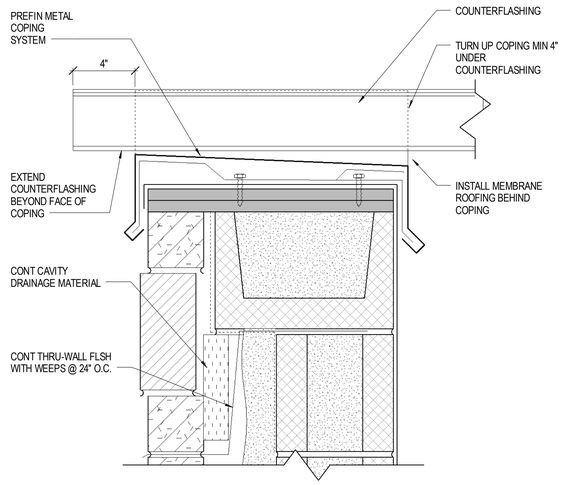

C1 A-503 COUNTERFLASHING AT COPING
SCALE: 3" = 1'-0"

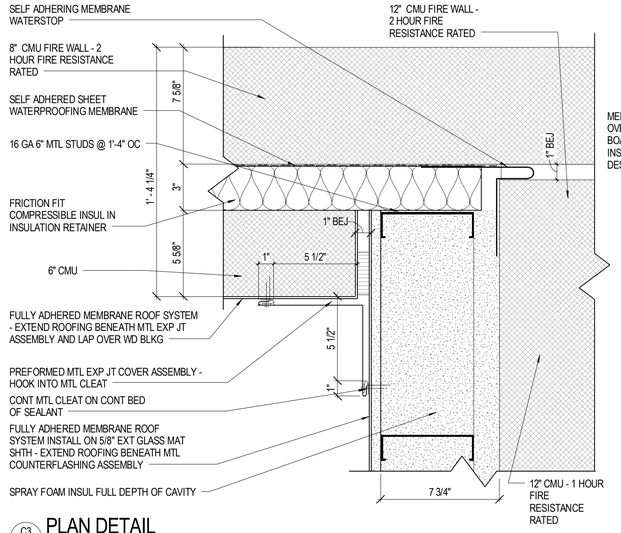

C3 A-503 PLAN DETAIL
SCALE: 3" = 1'-0"

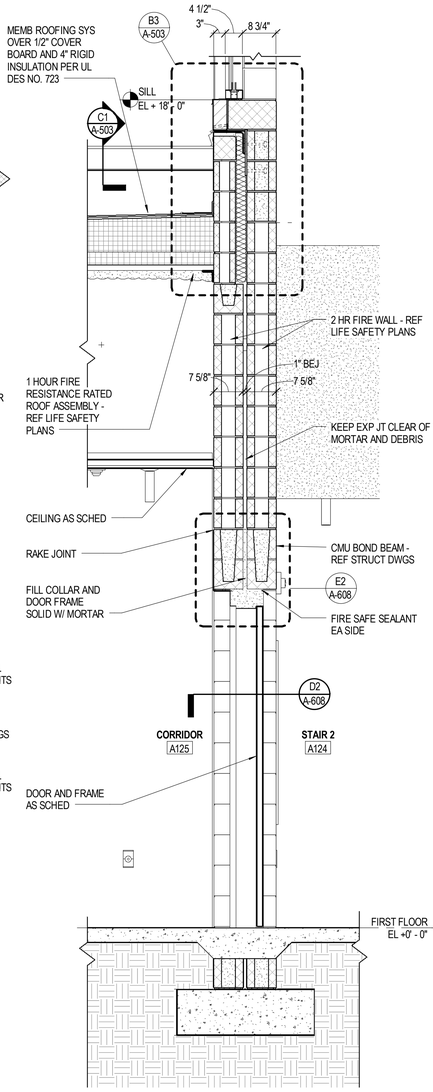

A4 A-503 SECTION AT FIRE PORTAL DOOR A125
SCALE: 3/4" = 1'-0"

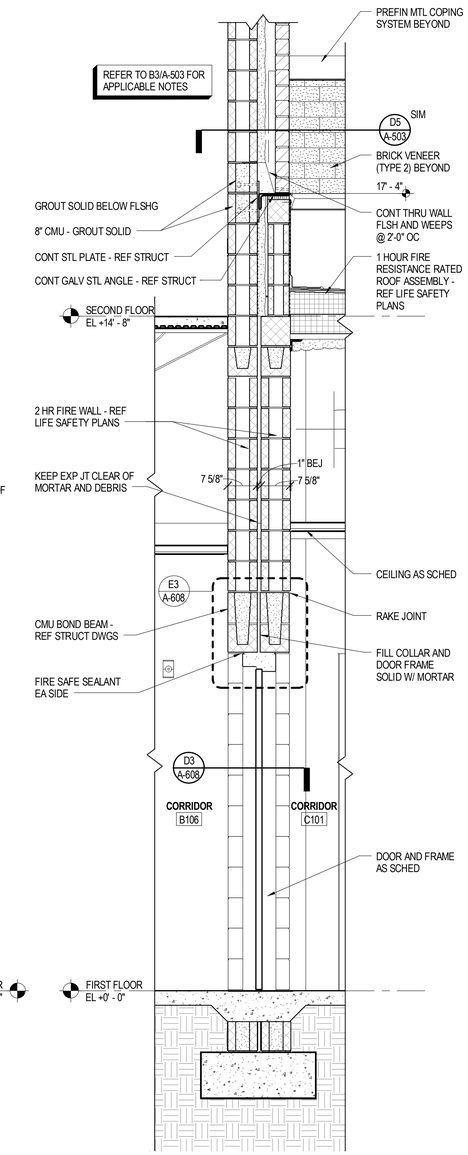

A5 A-503 SECTION AT FIRE PORTAL DOOR B106
SCALE: 3/4" = 1'-0"

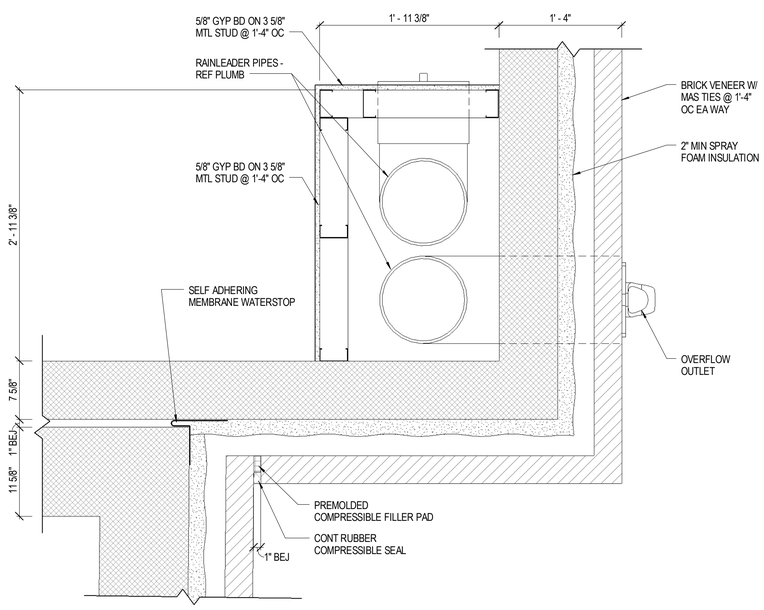

B1 A-503 PLAN DETAIL
SCALE: 1 1/2" = 1'-0"

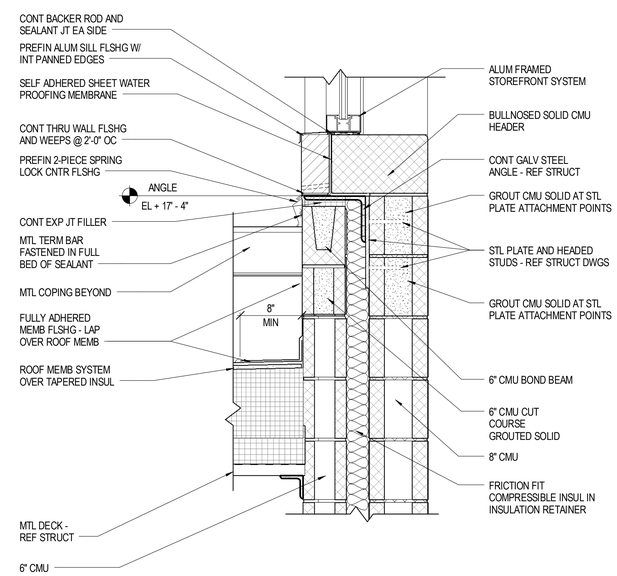

B3 A-503 SECTION DETAIL
SCALE: 1 1/2" = 1'-0"

Received by SBBCC 3.2.2015

S.B. Ballard Construction Company
RRMM ARCHITECTS
WALLER TODD & SADLER ARCHITECTS
The Livas Group Architects, P.C.

MARK	DATE	REVISIONS	BY	DESCRIPTION

DATE	03-03-2015
PROJECT	10105.22
DESIGNED	LRS
DRAWN	HJH
CHECKED	DRJ

COMMONWEALTH OF VIRGINIA
C. DUANE M. HARVER
Lic. No. 6310
03/03/15
ARCHITECT

PROJECT
CITY OF NORFOLK AND NORFOLK PUBLIC SCHOOLS
BROAD CREEK IB ELEMENTARY SCHOOL
NORFOLK, VIRGINIA
SBBCC PROJECT NUMBER: NPS-2014-317
VIRGINIA DEPARTMENT OF EDUCATION: 118-49-00-100

DRAWING
ENLARGED FIRE PORTAL PLANS AND SECTIONS

SHEET
A-503

C:\Users\rgossett\Documents\10105-22 Broad Creek Elem School - Central_cgossett.rvt
3/3/2015 5:38:15 PM

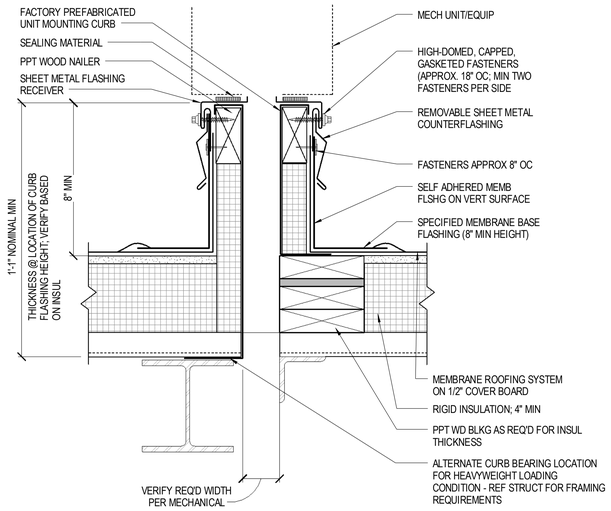

D1 / A-504 ROOF CURB DETAIL
SCALE: 3" = 1'-0"

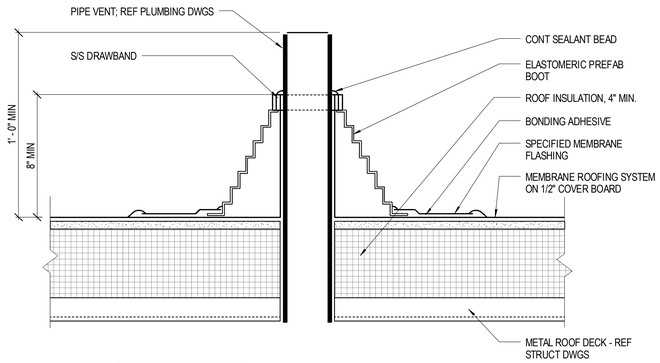

D3 / A-504 ROOF VENT DETAIL
SCALE: 3" = 1'-0"

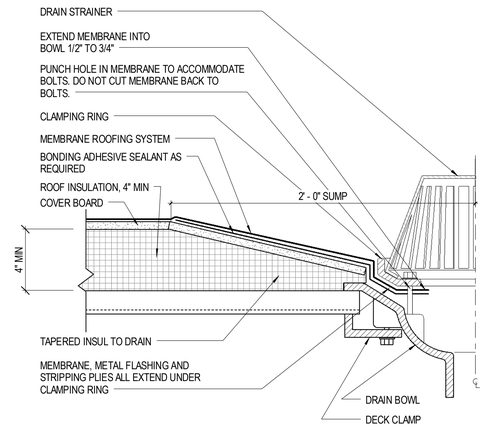

D5 / A-504 ROOF DRAIN DETAIL
SCALE: 3" = 1'-0"

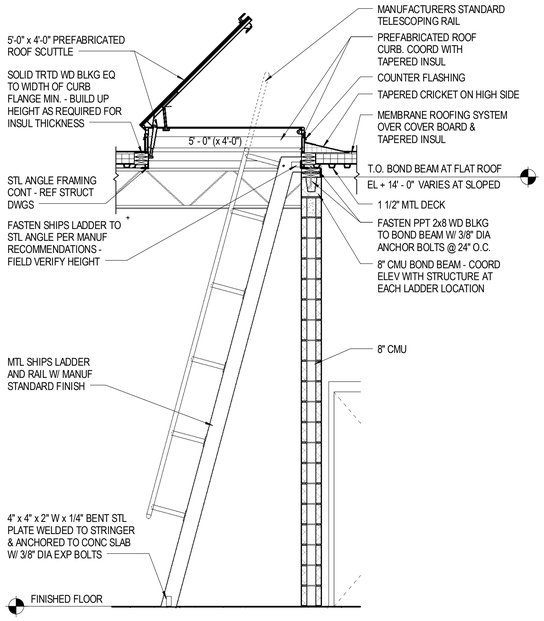

B1 / A-504 SHIPS LADDER SECTION
SCALE: 1/2" = 1'-0"

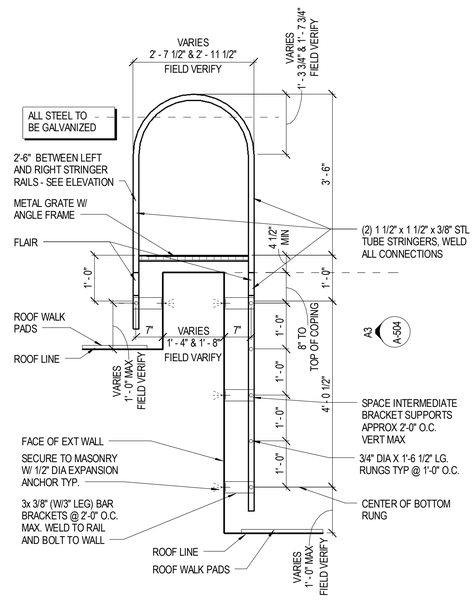

B3 / A-504 ROOF LADDER DETAIL
SCALE: 3/4" = 1'-0"

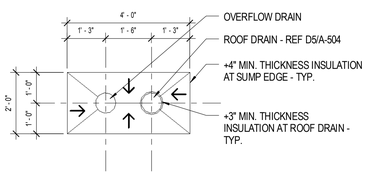

A1 / A-504 ROOF DRAIN PLAN DETAIL
SCALE: 1/2" = 1'-0"

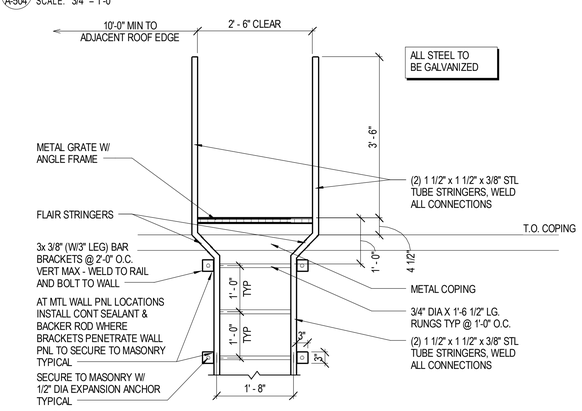

A3 / A-504 ROOF LADDER ELEVATION
SCALE: 3/4" = 1'-0"

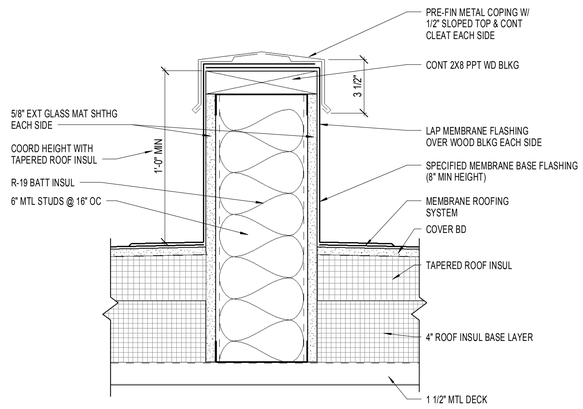

A5 / A-504 ROOF BREAK DETAIL
SCALE: 3" = 1'-0"

Received by SBBCC 3.2.2015

S.B. Ballard Construction Company
RRMM ARCHITECTS
WALLER TODD & SADLER ARCHITECTS
The Livas Group Architects, P.C.

MARK	DATE	REVISIONS	BY	DESCRIPTION

DATE	03-03-2015
PROJECT	10105.22
DESIGNED	LRS
DRAWN	HJH
CHECKED	DRJ

COMMONWEALTH OF VIRGINIA
C. DUANE M. HARVER
Lic. No. 6310
03/03/15
ARCHITECT

SBBCC PROJECT NUMBER NFS-2014-317
VIRGINIA DEPARTMENT OF EDUCATION 118-48-00-100

PROJECT
CITY OF NORFOLK AND NORFOLK PUBLIC SCHOOLS
BROAD CREEK IB ELEMENTARY SCHOOL
NORFOLK, VIRGINIA

DRAWING
ROOF DETAILS

SHEET
A-504

C:\Users\rgossett\Documents\10105-22 Broad Creek Elem School - Central_rgossett.rvt
3/3/2015 5:38:19 PM

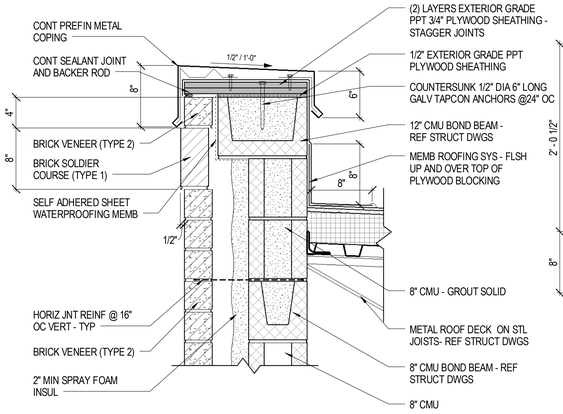

D1 / A-505 PARAPET DETAIL
SCALE: 1 1/2" = 1'-0"

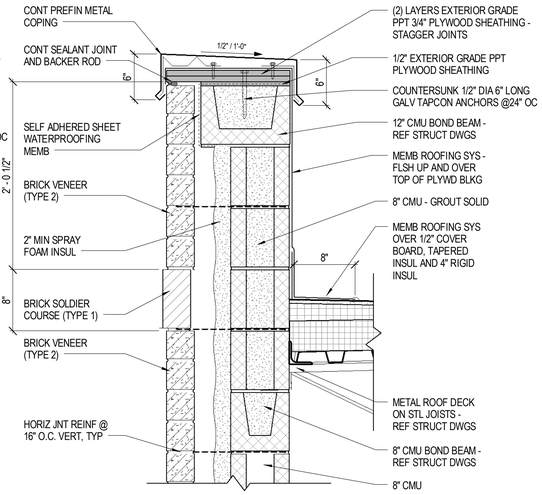

D2 / A-505 PARAPET DETAIL
SCALE: 1 1/2" = 1'-0"

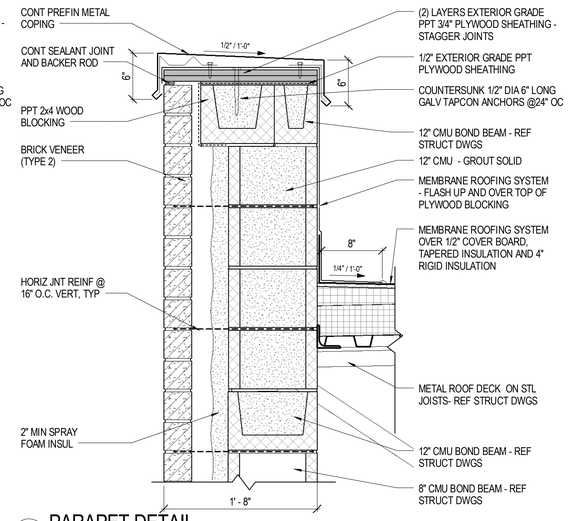

D4 / A-505 PARAPET DETAIL
SCALE: 1 1/2" = 1'-0"

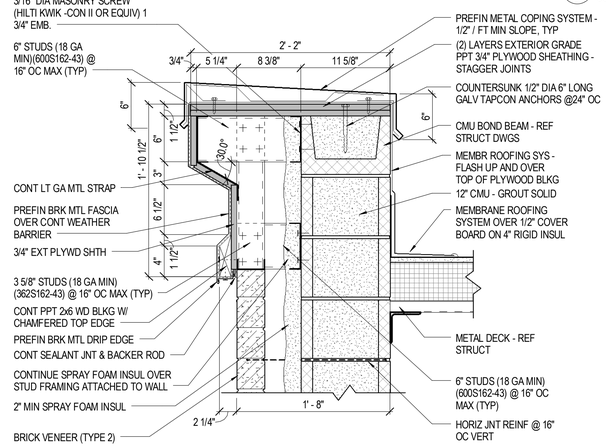

C1 / A-505 PARAPET DETAIL
SCALE: 1 1/2" = 1'-0"

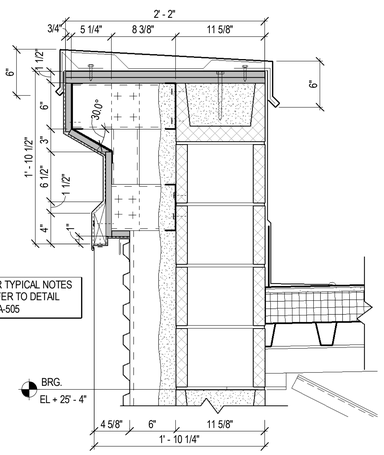

C2 / A-505 PARAPET DETAIL
SCALE: 1 1/2" = 1'-0"

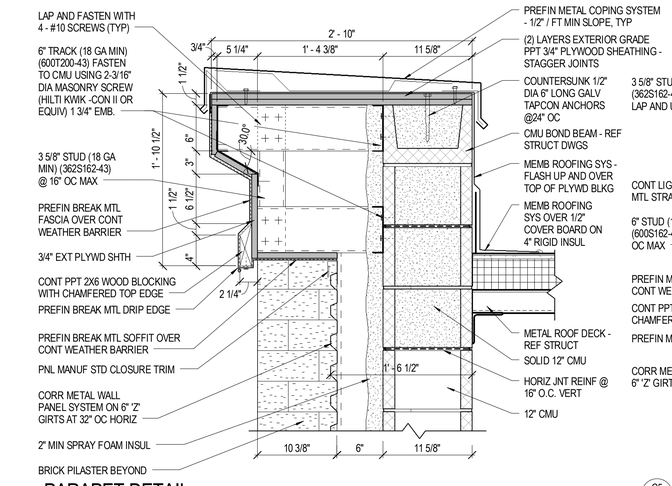

C4 / A-505 PARAPET DETAIL
SCALE: 1 1/2" = 1'-0"

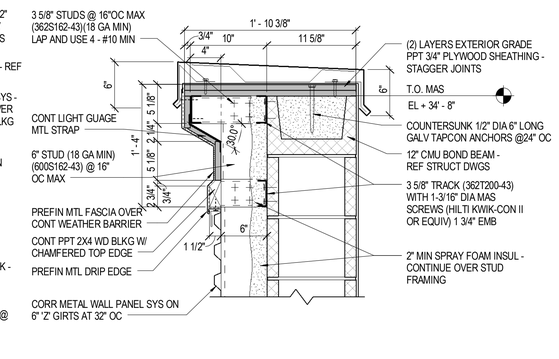

C5 / A-505 PARAPET DETAIL
SCALE: 1 1/2" = 1'-0"

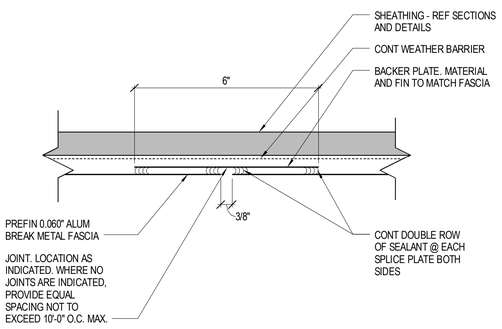

A1 / A-505 METAL FASCIA PANEL JOINT DETAIL (PLAN)
SCALE: 6" = 1'-0"

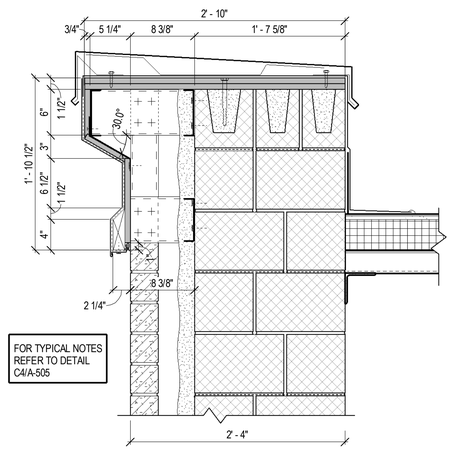

A2 / A-505 PARAPET DETAIL
SCALE: 1 1/2" = 1'-0"

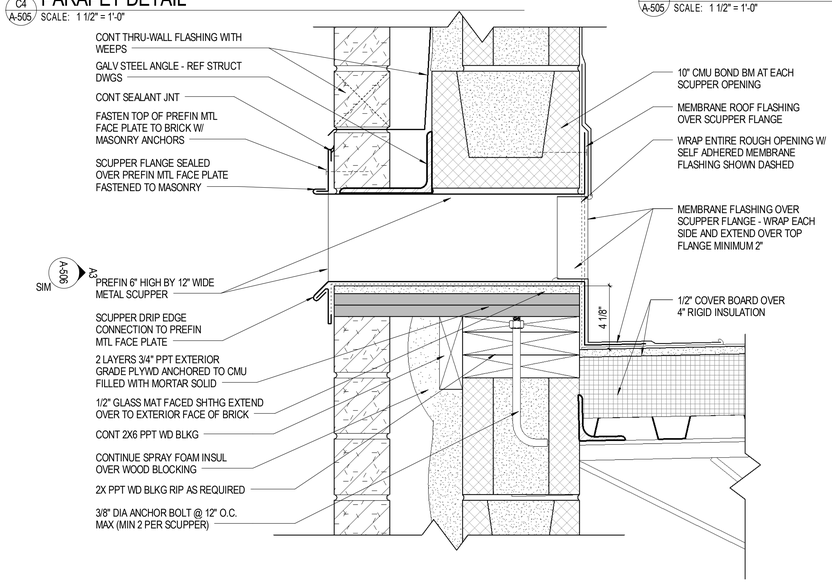

A4 / A-505 OVERFLOW SCUPPER DETAIL
SCALE: 3" = 1'-0"

Received by SBBCC 3.2.2015

S.B. Ballard Construction Company
RRMM ARCHITECTS
WALLER TODD & SADLER ARCHITECTS
The Livas Group Architects, P.C.

MARK	DATE	REVISIONS	BY	DESCRIPTION

DATE	03-03-2015
PROJECT	10105.22
DESIGNED	LRS
DRAWN	HJH
CHECKED	DRJ

COMMONWEALTH OF VIRGINIA
C. DUANE M. HARVER
Lic. No. 6310
03/03/15
ARCHITECT

SBBCC PROJECT NUMBER NPS-2014-317
VIRGINIA DEPARTMENT OF EDUCATION 118-48-00-100

PROJECT
CITY OF NORFOLK AND NORFOLK PUBLIC SCHOOLS
BROAD CREEK IB ELEMENTARY SCHOOL
NORFOLK, VIRGINIA

DRAWING
ROOF DETAILS

SHEET
A-505

C:\Users\rgossett\Documents\10105-22 Broad Creek Elem School - Central_rgossett.rvt
3/3/2015 5:38:30 PM

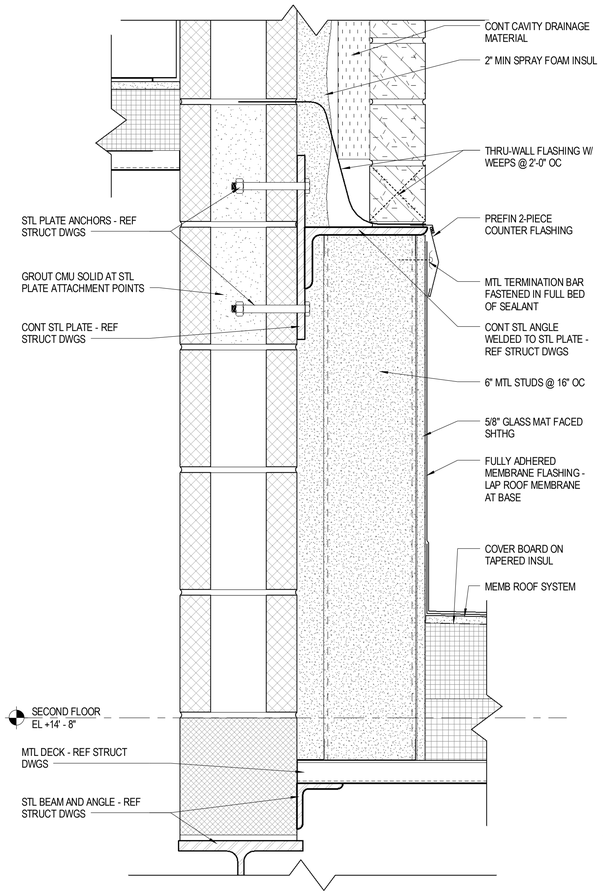

C1 A-506 DETAIL
SCALE: 3" = 1'-0"

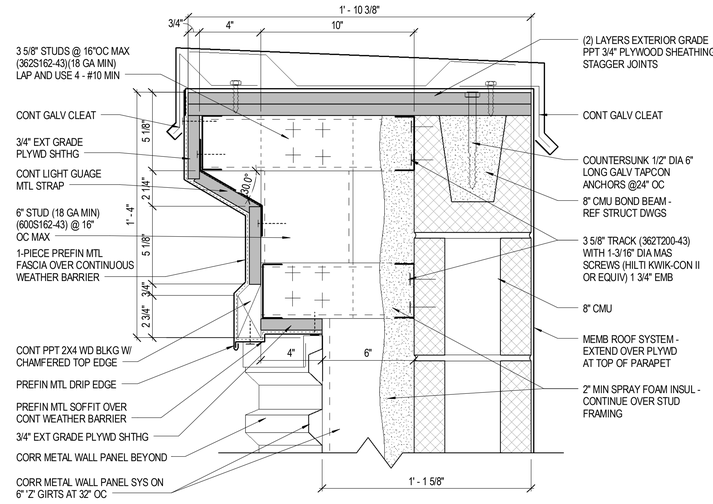

C3 A-506 PARAPET DETAIL AT COMMONS
SCALE: 3" = 1'-0"

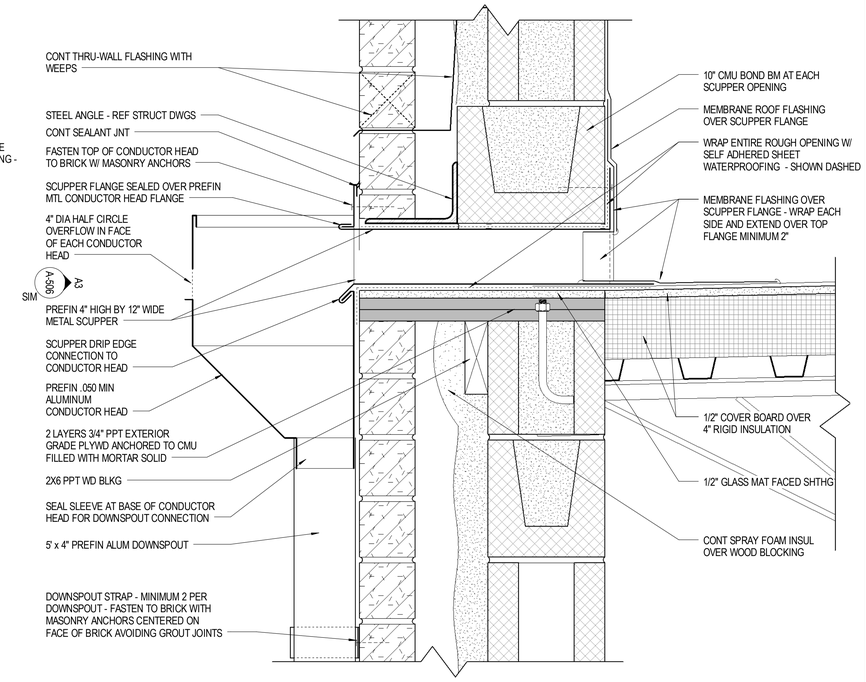

C5 A-506 CONDUCTOR HEAD/ ROOF SCUPPER DETAIL AT BRICK
SCALE: 3" = 1'-0"

FOR ADDITIONAL NOTES REFER TO DETAIL C1/ A-505

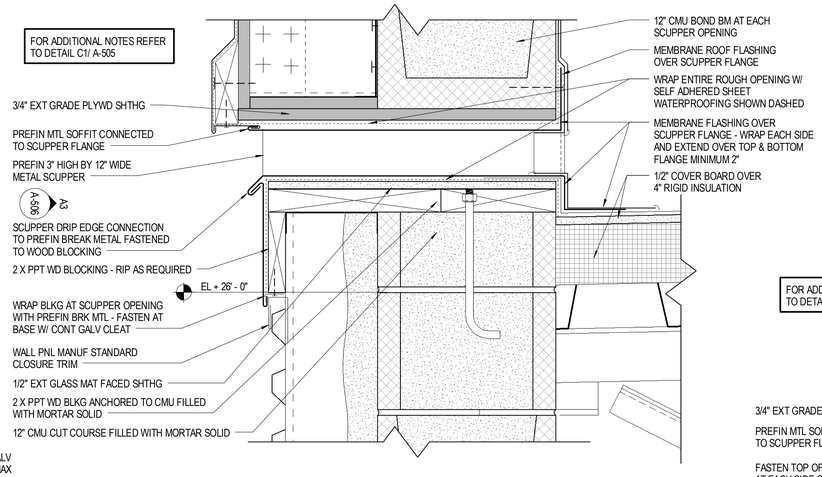

B3 A-506 CONDUCTOR HEAD/ ROOF SCUPPER DETAIL
SCALE: 3" = 1'-0"

FOR ADDITIONAL NOTES REFER TO DETAIL C1/ A-505

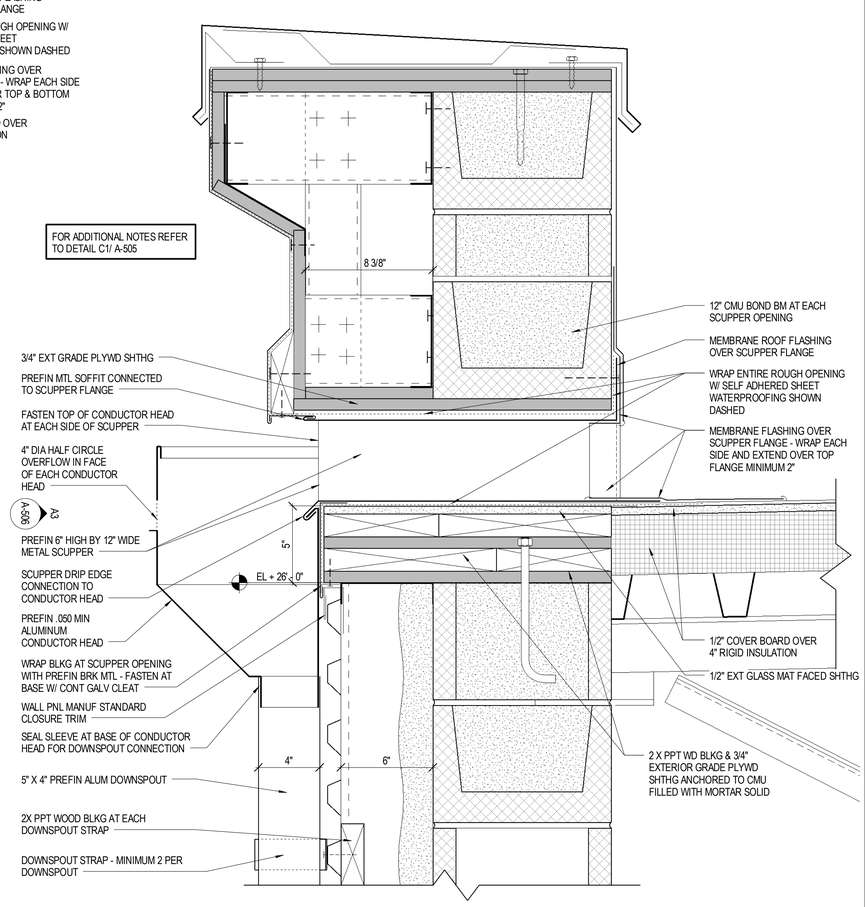

A5 A-506 CONDUCTOR HEAD/ ROOF SCUPPER DETAIL
SCALE: 3" = 1'-0"

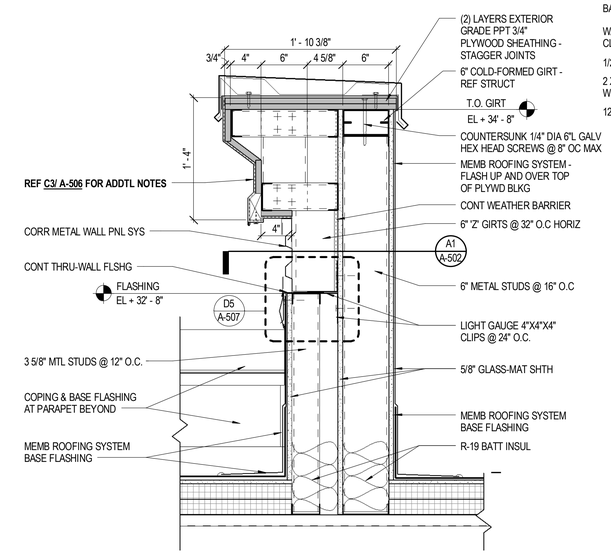

A1 A-506 PARAPET DETAIL
SCALE: 1 1/2" = 1'-0"

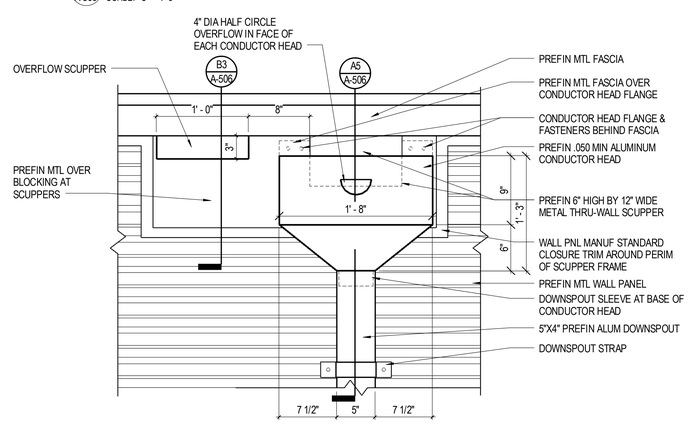

A3 A-506 CONDUCTOR HEAD ELEVATION
SCALE: 1 1/2" = 1'-0"

Received by SBBCC 3.2.2015

S.B. Ballard Construction Company

RRMM ARCHITECTS

WALLER TODD & SADLER ARCHITECTS

The Livas Group Architects, P.C.

MARK	DATE	REVISIONS	BY	DESCRIPTION

DATE	03-03-2015
PROJECT	10105.22
DESIGNED	LRS
DRAWN	HJH
CHECKED	DRJ

C. DUANE M. HARVER
Lic. No. 6310
03/03/15
ARCHITECT

SBBCC PROJECT NUMBER: NPS-2014-317
VIRGINIA DEPARTMENT OF EDUCATION: 118-48-00-100

PROJECT
CITY OF NORFOLK AND NORFOLK PUBLIC SCHOOLS
BROAD CREEK IB ELEMENTARY SCHOOL
NORFOLK, VIRGINIA

DRAWING
ROOF DETAILS

SHEET
A-506

C:\Users\rgosset\Documents\10105-22 Broad Creek Elem School - Central_rgosset.rvt
3/3/2015 5:38:38 PM

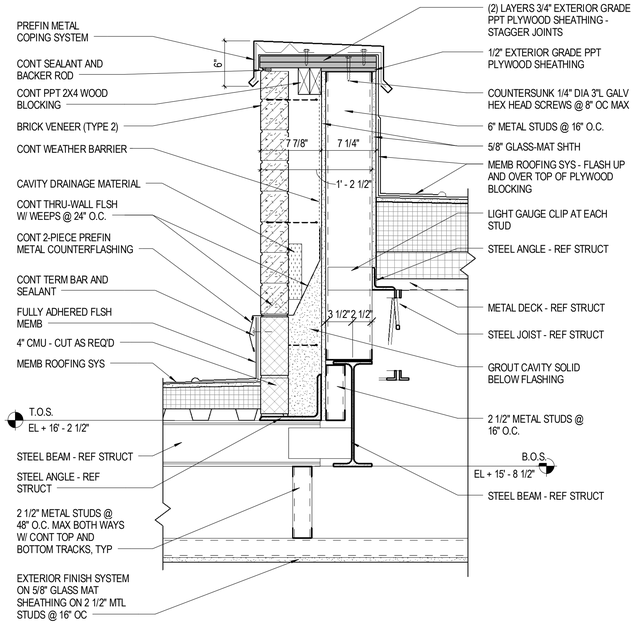

D1 A-507 DETAIL
SCALE: 1 1/2" = 1'-0"

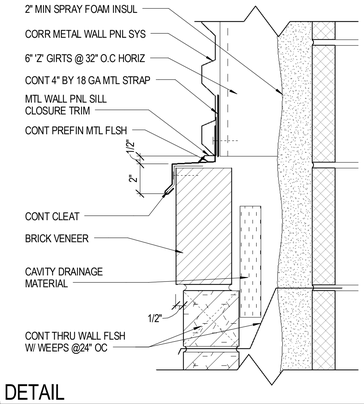

D2 A-507 DETAIL
SCALE: 3" = 1'-0"

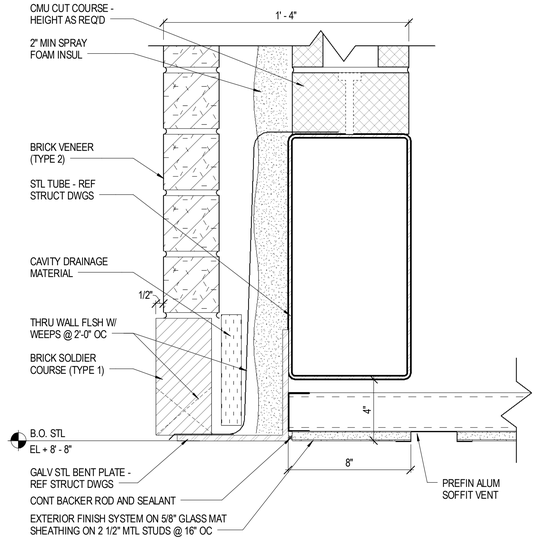

D4 A-507 DETAIL
SCALE: 3" = 1'-0"

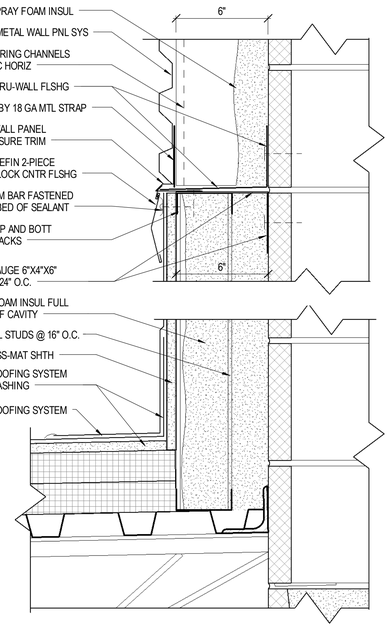

D5 A-507 ROOF DETAIL
SCALE: 3" = 1'-0"

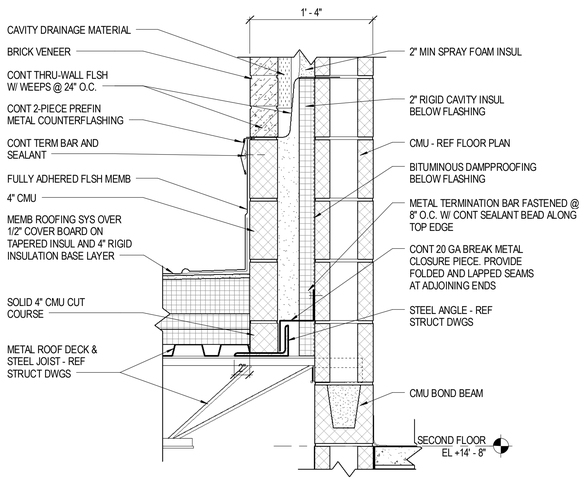

B1 A-507 ROOF DETAIL
SCALE: 1 1/2" = 1'-0"

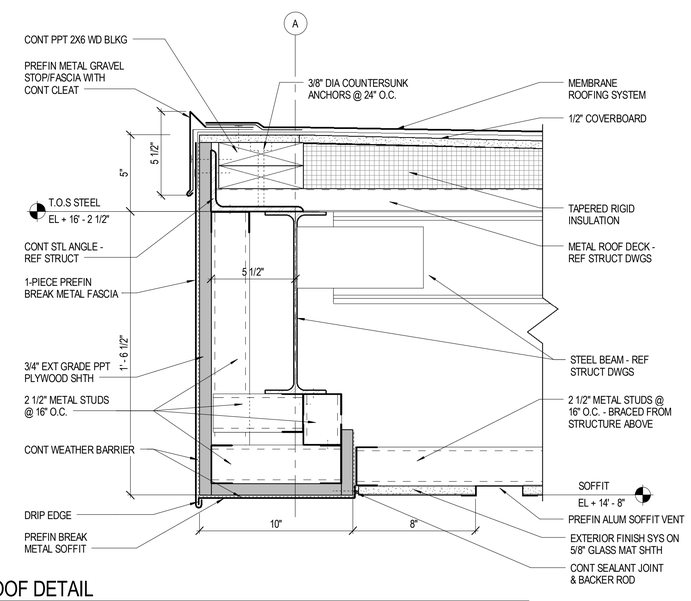

A2 A-507 ROOF DETAIL
SCALE: 3" = 1'-0"

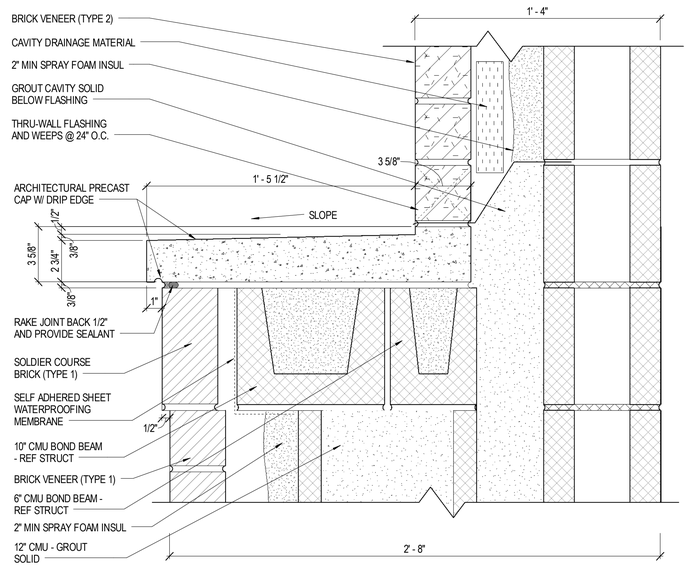

A5 A-507 PRECAST CAP DETAIL
SCALE: 3" = 1'-0"

Received by SBBCC 3.2.2015

S.B. Ballard Construction Company

RRMM ARCHITECTS

WALLER TODD & SADLER ARCHITECTS

The Livas Group Architects, P.C.

MARK	DATE	BY	DESCRIPTION
REVISIONS			

DATE	03-03-2015
PROJECT	10105.22
DESIGNED	LRS
DRAWN	HJH
CHECKED	DRJ

COMMONWEALTH OF VIRGINIA
DUANE M. HARVER
Lic. No. 6310
03/03/15
ARCHITECT

SBBCC PROJECT NUMBER: NPS-2014-317
VIRGINIA DEPARTMENT OF EDUCATION: 118-46-00-100

PROJECT
CITY OF NORFOLK AND NORFOLK PUBLIC SCHOOLS
BROAD CREEK IB ELEMENTARY SCHOOL
NORFOLK, VIRGINIA

DRAWING
SECTION DETAILS

SHEET
A-507

C:\Users\rgossett\Documents\10105-22 Broad Creek Elem School - Central_rgossett.rvt
3/3/2015 5:38:48 PM

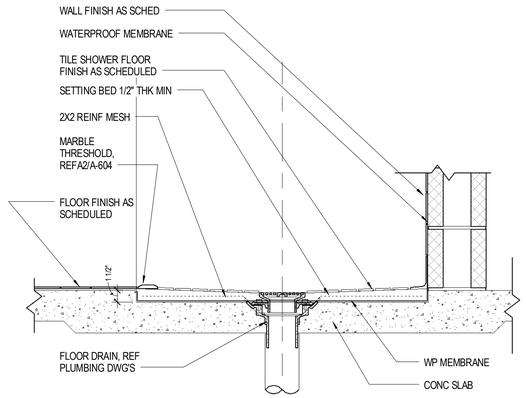

D1 / A-508 SHOWER SECTION
SCALE: 1 1/2" = 1'-0"

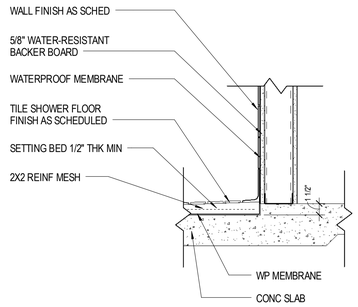

D2 / A-508 SHOWER SECTION @ MTL STUD PTN
SCALE: 1 1/2" = 1'-0"

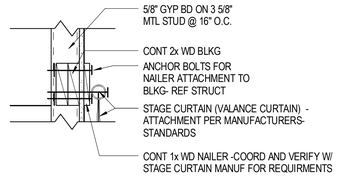

D3 / A-508 CURTAIN VALANCE TACK CONNECTION DETAIL
SCALE: 1 1/2" = 1'-0"

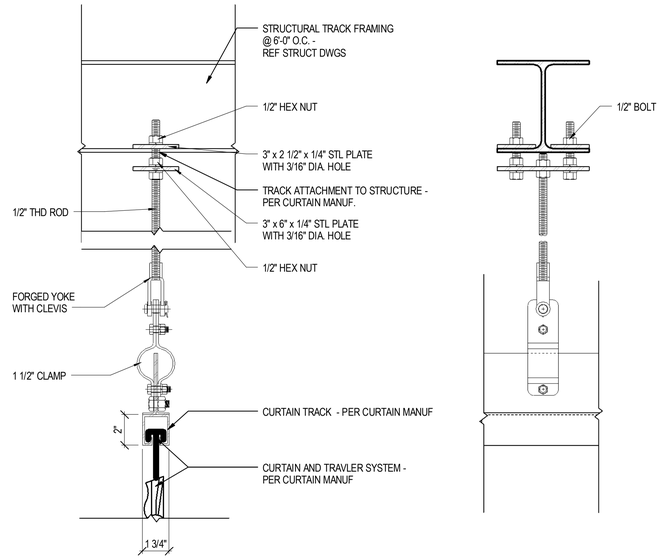

D5 / A-508 CURTAIN TRACK DETAIL
SCALE: 3" = 1'-0"

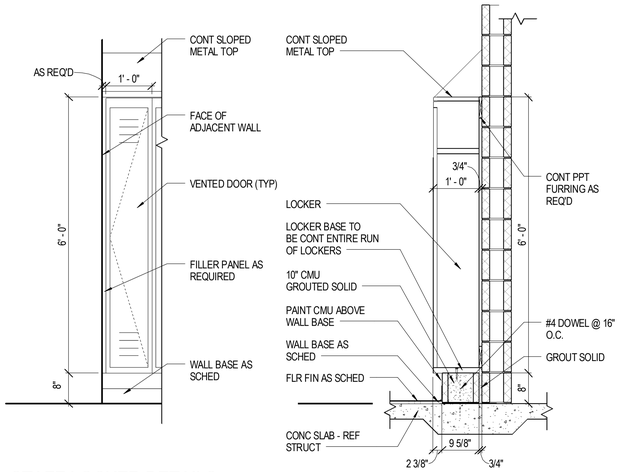

C1 / A-508 STAFF LOCKER DETAILS
SCALE: 3/4" = 1'-0"

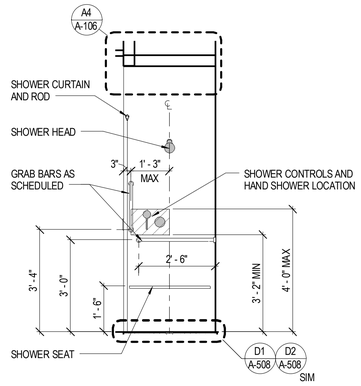

C2 / A-508 TYP SHOWER ELEVATION
SCALE: 1/2" = 1'-0"

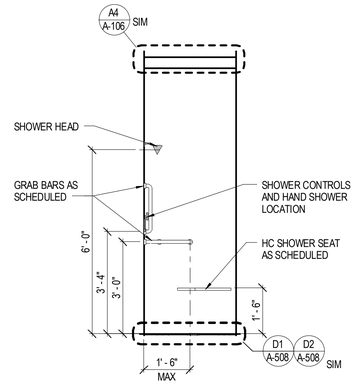

C3 / A-508 TYP SHOWER ELEVATION 2
SCALE: 1/2" = 1'-0"

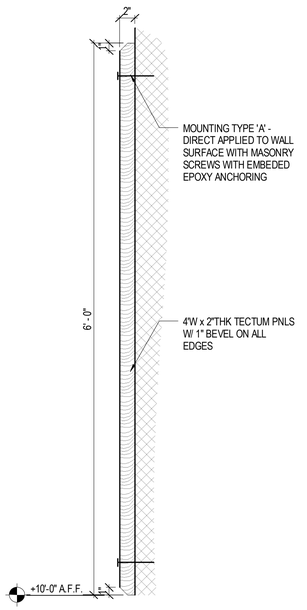

A1 / A-508 TECTUM PANEL DETAIL
SCALE: 1 1/2" = 1'-0"

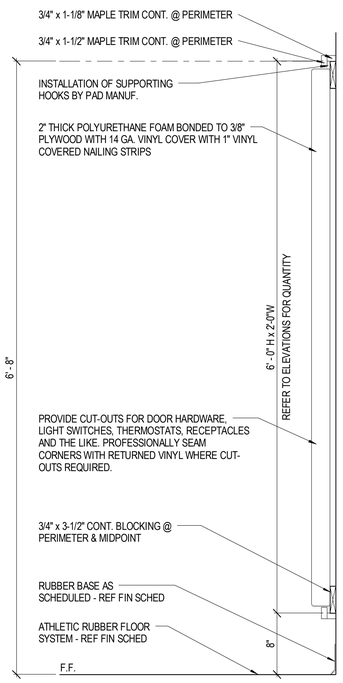

A2 / A-508 GYM CRASH PAD DETAIL
SCALE: 1 1/2" = 1'-0"

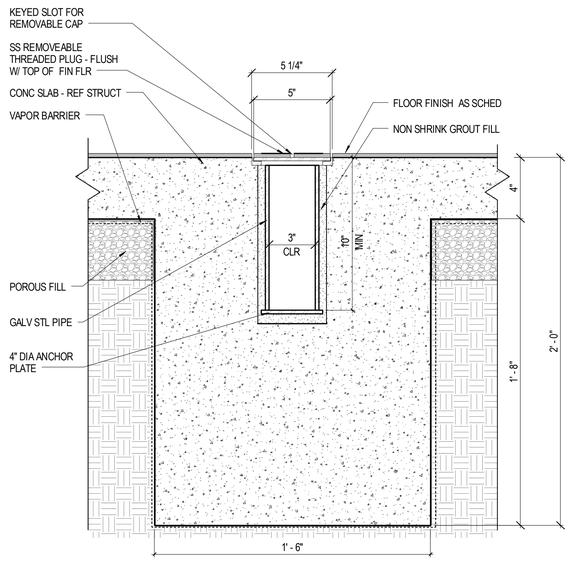

A3 / A-508 VOLLEYBALL POST SLEEVE DETAIL
SCALE: 3" = 1'-0"

Received by SBBCC 3.2.2015

S.B. Ballard Construction Company
RRMM ARCHITECTS
WALLER TODD & SADLER ARCHITECTS
The Livas Group Architects, P.C.

MARK	DATE	BY	DESCRIPTION
REVISIONS			

DATE	03-03-2015
PROJECT	10105.22
DESIGNED	LRS
DRAWN	HJH
CHECKED	DRJ

COMMONWEALTH OF VIRGINIA
C. DUANE M. HARVER
Lic. No. 6310
03/03/15
ARCHITECT

SBBCC PROJECT NUMBER NPS-2014-317
VIRGINIA DEPARTMENT OF EDUCATION 118-48-00-100

PROJECT
CITY OF NORFOLK AND NORFOLK PUBLIC SCHOOLS
BROAD CREEK IB ELEMENTARY SCHOOL
NORFOLK, VIRGINIA

DRAWING
MISCELLANEOUS DETAILS

SHEET
A-508

C:\Users\rgossett\Documents\10105-22 Broad Creek Elem School - Central_rgossett.rvt
3/3/2015 5:38:54 PM

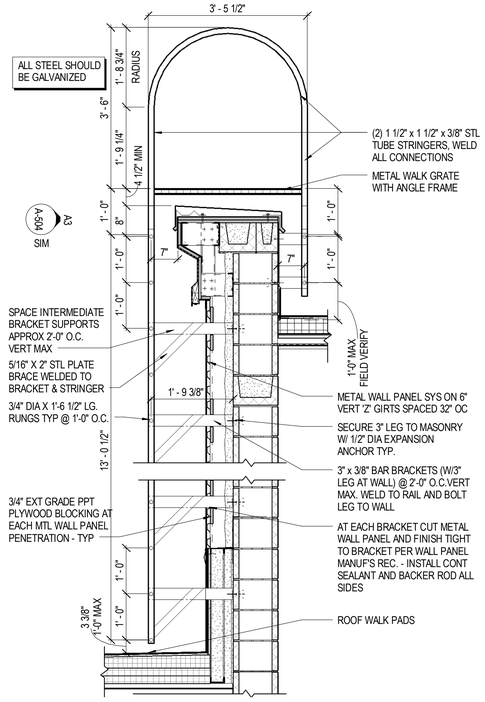

C1 / A-509 ROOF LADDER AT GYM

SCALE: 3/4" = 1'-0"

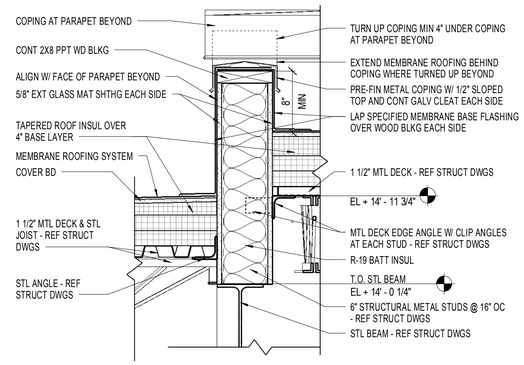

C3 / A-509 ROOF DIVIDER AT OFFSET DECK

SCALE: 1 1/2" = 1'-0"

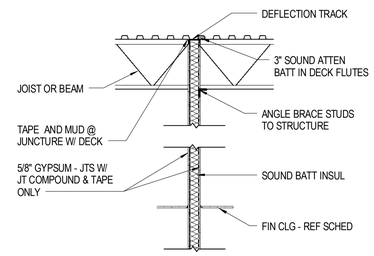

TYP TERMINATION OF MTL STUD PARTITION AT FIRST FLOOR REQ'D TO EXTEND TO BOTTOM OF DECK AT SECOND FLOOR OR FLAT ROOF SHOWN THUS

A TYP DETAIL - MTL STUD PARTITION TERMINATION PERPENDICULAR TO JOIST/ BEAM

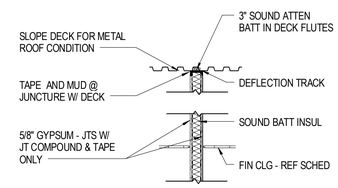

TYP. TERMINATION OF MTL STUD PARTITION REQ'D TO EXTEND TO DECK SHOWN THUS

B TYP DETAIL - MTL STUD PARTITION TERMINATION

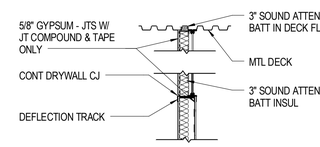

TYP. TERMINATION OF MTL STUD PARTITION REQ'D TO EXTEND TO DECK SHOWN THUS

C TYP DETAIL - METAL STUD PARTITION TERMINATION CONTINUOUS @ JOIST

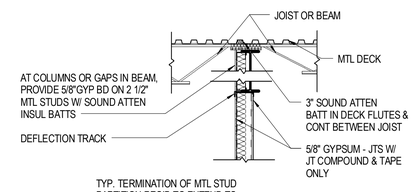

TYP. TERMINATION OF MTL STUD PARTITION REQ'D TO EXTEND TO DECK SHOWN THUS

D TYP DETAIL - METAL STUD PARTITION TERMINATION CONTINUOUS @ BEAM

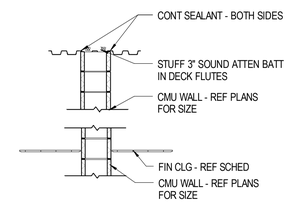

TYP. TERMINATION OF CMU PARTITION REQ'D TO EXTEND TO DECK SHOWN THUS

E TYP DETAIL - CMU PARTITION TERMINATION

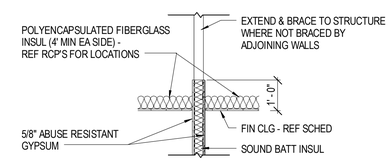

TYP. TERMINATION OF MTL STUD PARTITION **NOT** REQ'D TO EXTEND TO DECK SHOWN THUS

F TYP DETAIL - MTL STUD PARTITION TERMINATION

TYPICAL PARTITION TERMINATION DETAILS

SCALE: 1/2" = 1'-0"

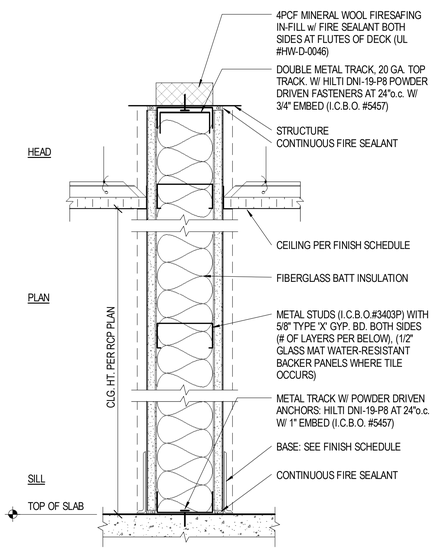

A1 / A-509 FIRE-RATED WALL CLOSURE

SCALE: 3" = 1'-0"

Received by SBBCC 3.2.2015

S.B. Ballard Construction Company

RRMM ARCHITECTS

WALLER TODD & SADLER ARCHITECTS

The Livas Group Architects, P.C.

MARK	DATE	BY	DESCRIPTION
REVISIONS			

DATE	03-03-2015
PROJECT	10105.22
DESIGNED	LRS
DRAWN	HJH
CHECKED	DRJ

COMMONWEALTH OF VIRGINIA
DUANE M. HARVER
Lic. No. 6310
03/03/15
ARCHITECT

PROJECT
CITY OF NORFOLK AND NORFOLK PUBLIC SCHOOLS
BROAD CREEK IB ELEMENTARY SCHOOL
NORFOLK, VIRGINIA

SBBCC PROJECT NUMBER: NPS-2014-317
VIRGINIA DEPARTMENT OF EDUCATION: 118-46-00-100

DRAWING
DETAILS

SHEET
A-509

C:\Users\rgossett\Documents\10105-22 Broad Creek Elem School - Central_rgossett.rvt

3/3/2015 5:38:59 PM

DOOR SCHEDULE - FIRST FLOOR

DOOR						FRAME							
			SIZE					DETAILS				HDWR	
NUMBER	TYPE	MAT'L	WIDTH	HEIGHT	THICKNESS	TYPE	MAT	HEAD	JAMB	SILL	RATING (MIN)	SET	NOTES
A101	D	ALUM	PR 3'-0"	7' - 0"	1 3/4"	SF-9	ALUM	D1/A-606	C1/A-606	B5/A-607		1.0	
A102	C	WD	3'-0"	7' - 0"	1 3/4"	HM-2	HM	C3/A-604	B3/A-604	--		39.0	
A103	A	WD	3'-0"	7' - 0"	1 3/4"	HM-2	HM	C4/A-604	B4/A-604	C/A-601		46.0	6
A104	A	WD	3'-0"	7' - 0"	1 3/4"	HM-2	HM	C4/A-604	B4/A-604	--		37.0	
A105	C	WD	3'-0"	7' - 0"	1 3/4"	HM-2	HM	C3/A-604	B3/A-604	--		39.0	
A106A	A	WD	3'-0"	7' - 0"	1 3/4"	HM-2	HM	C4/A-604	B4/A-604	C/A-601		48.0	6
A106B	A	WD	3'-0"	7' - 0"	1 3/4"	HM-2	HM	C4/A-604	B4/A-604	C/A-601		48.0	6
A107	C	WD	3'-0"	7' - 0"	1 3/4"	HM-2	HM	C3/A-604	B3/A-604	--		39.0	
A109	A	WD	3'-0"	7' - 0"	1 3/4"	HM-2	HM	C3/A-604	B3/A-604	--		50.0	
A110	A	WD	3'-0"	7' - 0"	1 3/4"	HM-2	HM	C3/A-604	B3/A-604	B/A-601		50.0	
A110A	A	WD	3'-0"	7' - 0"	1 3/4"	HM-2	HM	C3/A-604	B3/A-604	B/A-601		50.0	6
A113	A	WD	3'-0"	7' - 0"	1 3/4"	HM-2	HM	C1/A-604	B3/A-604	--		53.0	6
A115	A	WD	4'-0"	7' - 0"	1 3/4"	HM-2	HM	C3/A-604	B3/A-604	B/A-601	60 MIN	53.0	
A116A	D	ALUM	PR 3'-0"	7' - 0"	1 3/4"	SF-6	ALUM	D5/A-607	A1&C5/A-607	B5/A-607			
A116B	D	ALUM	PR 3'-0"	7' - 0"	1 3/4"	SF-7	ALUM	A2/A-607	A4&A5/A607	A4/A606			
A117	C	WD	3'-0"	7' - 0"	1 3/4"	HM-2	HM	C1/A-604	B3/A-604	--		39.0	
A117A	D	ALUM	3'-0"	7' - 0"	1 3/4"	SF-2	ALUM	D1/A-606	C1/A-606	B5/A-607		8.0	
A118	A	WD	3'-0"	7' - 0"	1 3/4"	HM-2	HM	C3/A-604	B3/A-604	--		36.0	
A119	A	WD	3'-0"	7' - 0"	1 3/4"	HM-2	HM	C3/A-604	B3/A-604	--		37.0	
A120	A	WD	3'-0"	7' - 0"	1 3/4"	HM-2	HM	C3/A-604	B3/A-604	B/A-601		50.0	6
A121	C	WD	3'-0"	7' - 0"	1 3/4"	HM-2	HM	C3/A-604	B3/A-604	--		42.0	
A121A	D	ALUM	3'-0"	7' - 0"	1 3/4"	SF-2	ALUM	D1/A-606	C1/A-606	B5/A-607		8.0	
A122	C	WD	3'-0"	7' - 0"	1 3/4"	HM-2	HM	C3/A-604	B3/A-604	--		42.0	
A122A	D	ALUM	3'-0"	7' - 0"	1 3/4"	SF-2	ALUM	D1/A-606	C1/A-606	B5/A-607		8.0	
A123	A	WD	3'-0"	7' - 0"	1 3/4"	HM-2	HM	C3/A-604	B3/A-604	--	60 MIN	38.0	
A123A	K	STL	4'-0"	4' - 8"	2"	STL	STL	E2/A-607	C2/A-607	B2/A607	60 MIN	55.0	
A125	A	HM	PR 4'-0"	7' - 0"	1 3/4"	HM-2	HM	E2/A-608	D2/A-608	--	90 MIN	23.0	1
A128	D	ALUM	3'-0"	7' - 0"	1 3/4"	SF-2	ALUM	D1/A-606	C1/A-606	B5/A-607		8.0	
A129	A	WD	3'-0"	7' - 0"	1 3/4"	HM-2	HM	C3/A-604	B3/A-604	A2/A-604		46.0	6
A130	C	WD	3'-0"	7' - 0"	1 3/4"	HM-2	HM	C3/A-604	B3/A-604	--		31.0	
A131	C	WD	3'-0"	7' - 0"	1 3/4"	HM-2	HM	C3/A-604	B3/A-604	--		39.0	
A132	C	WD	3'-0"	7' - 0"	1 3/4"	HM-2	HM	C3/A-604	B3/A-604	--		39.0	
A133A	A	WD	3'-0"	7' - 0"	1 3/4"	HM-2	HM	C4/A-604	B4/A-604	C/A-601		48.0	6
A133B	A	WD	3'-0"	7' - 0"	1 3/4"	HM-2	HM	C4/A-604	B4/A-604	C/A-601		48.0	6
A134	C	WD	3'-0"	7' - 0"	1 3/4"	HM-2	HM	C3/A-604	B3/A-604	--		39.0	
A135	A	WD	3'-0"	7' - 0"	1 3/4"	HM-2	HM	C4/A-604	B4/A-604	C/A-601		46.0	6
A136	C	WD	3'-0"	7' - 0"	1 3/4"	HM-2	HM	C3/A-604	B3/A-604	--		39.0	
A137	A	WD	3'-0"	7' - 0"	1 3/4"	HM-2	HM	C4/A-604	B4/A-604	C/A-601		46.0	6
A138	C	WD	3'-0"	7' - 0"	1 3/4"	HM-2	HM	C3/A-604	B3/A-604	--		39.0	
A139	D	ALUM	PR 3'-0"	7' - 0"	1 3/4"	SF-9	ALUM	D1/A-606	C1/A-606	B5/A-607		3.0	3
A140	C	WD	4'-0"	7' - 0"	1 3/4"	HM-2	HM	C3/A-604	B3/A-604	--		39.0	
A141A	C	WD	3'-0"	7' - 0"	1 3/4"	HM-2	HM	C3/A-604	B3/A-604	A/A-601		41.0	
A141B	C	WD	3'-0"	7' - 0"	1 3/4"	HM-2	HM	C3/A-604	B3/A-604	A/A-601		41.0	
A142A	A	WD	3'-0"	7' - 0"	1 3/4"	HM-2	HM	C3/A-604	B3/A-604	--		51.1	
A142B	A	WD	3'-0"	7' - 0"	1 3/4"	HM-2	HM	C3/A-604	B3/A-604	--		51.1	
A143	C	WD	PR 3'-0"	7' - 0"	1 3/4"	HM-2	HM	C3/A-604	B3/A-604	--		43.1	
B101A	A	WD	3'-0"	7' - 0"	1 3/4"	HM-2	HM	C4/A-604	B4/A-604	C/A-601		47.1	6
B101B	A	WD	3'-0"	7' - 0"	1 3/4"	HM-2	HM	C4/A-604	B4/A-604	C/A-601		47.1	6
B102	C	WD	3'-0"	7' - 0"	1 3/4"	HM-2	HM	C3/A-604	B3/A-604	--		42.0	
B102A	D	ALUM	3'-0"	7' - 0"	1 3/4"	SF-2	ALUM	D1/A-606	C1/A-606	B5/A-607		8.0	
B103	C	WD	3'-0"	7' - 0"	1 3/4"	HM-2	HM	C3/A-604	B3/A-604	--		42.0	
B103A	D	ALUM	3'-0"	7' - 0"	1 3/4"	SF-2	ALUM	D1/A-606	C1/A-606	B5/A-607		8.0	
B104A	A	WD	3'-0"	7' - 0"	1 3/4"	HM-2	HM	C4/A-604	B4/A-604	C/A-601		47.1	6
B104B	A	WD	3'-0"	7' - 0"	1 3/4"	HM-2	HM	C4/A-604	B4/A-604	C/A-601		47.1	6
B105	C	WD	3'-0"	7' - 0"	1 3/4"	HM-2	HM	C3/A-604	B3/A-604	--		42.0	
B105A	D	ALUM	3'-0"	7' - 0"	1 3/4"	SF-2	ALUM	D1/A-606	C1/A-606	B5/A-607		8.0	
B106	A	HM	PR 3'-0"	7' - 0"	1 3/4"	HM-2	HM	E3/A-608	D3/A-608	--	90 MIN	27.0	1, 7
B107	C	WD	3'-0"	7' - 0"	1 3/4"	HM-2	HM	C3/A-604	B3/A-604	--		31.0	
B109	D	ALUM	PR 3'-0"	7' - 0"	1 3/4"	SF-9	ALUM	D1/A-606	C1/A-606	B5/A-607			
B110A	A	WD	3'-0"	7' - 0"	1 3/4"	HM-2	HM	C4/A-604	B4/A-604	C/A-601		47.1	6
B110B	A	WD	3'-0"	7' - 0"	1 3/4"	HM-2	HM	C4/A-604	B4/A-604	C/A-601		47.1	6
B111	C	WD	3'-0"	7' - 0"	1 3/4"	HM-2	HM	C3/A-604	B3/A-604	--		42.0	
B112	E	WD	3'-0"	7' - 0"	1 3/4"	HM-2	HM	C4/A-604	B4/A-604	--		36.0	
B113	E	WD	3'-0"	7' - 0"	1 3/4"	HM-2	HM	C4/A-604	B4/A-604	--		36.0	
B114B	D	ALUM	3'-0"	7' - 0"	1 3/4"	SF-23	ALUM	C1/A-604	B1/A-604	A1/A-604			
B115	E	WD	3'-0"	7' - 0"	1 3/4"	HM-2	HM	C4/A-604	B4/A-604	A/A-601		36.0	
B116	A	WD	3'-0"	7' - 0"	1 3/4"	HM-2	HM	C4/A-604	B4/A-604	--		36.0	6
B117	C	WD	3'-0"	7' - 0"	1 3/4"	HM-2	HM	C4/A-604	B4/A-604	--		36.0	
B118	A	WD	3'-0"	7' - 0"	1 3/4"	HM-2	HM	C4/A-604	B4/A-604	A2/A-604		46.0	6
B119	A	WD	3'-0"	7' - 0"	1 3/4"	HM-2	HM	C3/A-604	B3/A-604	--		50.0	
B120	A	WD	3'-0"	7' - 0"	1 3/4"	HM-2	HM	C3/A-604	B3/A-604	--	60 MIN	31.0	
B121	C	WD	3'-0"	7' - 0"	1 3/4"	HM-2	HM	C3/A-604	B3/A-604	--		42.0	
B122	C	WD	3'-0"	7' - 0"	1 3/4"	HM-2	HM	C3/A-604	B3/A-604	--		42.0	
B122A	D	ALUM	3'-0"	7' - 0"	1 3/4"	SF-2	ALUM	D1/A-606	C1/A-606	B5/A-607		8.0	
B123A	A	WD	3'-0"	7' - 0"	1 3/4"	HM-2	HM	C4/A-604	B4/A-604	C/A-601		47.1	6
B123B	A	WD	3'-0"	7' - 0"	1 3/4"	HM-2	HM	C4/A-604	B4/A-604	C/A-601		47.1	6
B124	C	WD	3'-0"	7' - 0"	1 3/4"	HM-2	HM	C3/A-604	B3/A-604	--		42.0	
B124A	D	ALUM	3'-0"	7' - 0"	1 3/4"	SF-2	ALUM	D1/A-606	C1/A-606	B5/A-607		8.0	
B125	C	WD	3'-0"	7' - 0"	1 3/4"	HM-2	HM	C3/A-604	B3/A-604	--		42.0	
B125A	D	ALUM	3'-0"	7' - 0"	1 3/4"	SF-2	ALUM	D1/A-606	C1/A-606	B5/A-607		8.0	
B126A	A	WD	3'-0"	7' - 0"	1 3/4"	HM-2	HM	C4/A-604	B4/A-604	C/A-601		47.1	6
B126B	A	WD	3'-0"	7' - 0"	1 3/4"	HM-2	HM	C4/A-604	B4/A-604	C/A-601		47.1	6
B127	A	WD	3'-0"	7' - 0"	1 3/4"	HM-2	HM	C3/A-604	B3/A-604	B/A-601		50.0	6
B144A	D	WD	PR 3'-0"	7' - 2"	1 3/4"	SF-9	ALUM	C3/A-608	B3/A-608	A/A-601			
C101	A	WD	PR 3'-6"	7' - 0"	1 3/4"	HM-2	HM	C3/A-604	B3/A-604	--		23.0	1
C101A	D	ALUM	PR 3'-0"	7' - 0"	1 3/4"	SF-9	ALUM	D1/A-606	C1/A-606	B5/A-607			
C102	C	WD	3'-0"	7' - 0"	1 3/4"	HM-2	HM	C3/A-604	B3/A-604	--		38.0	
C104	H	WD	7'-0"	7' - 0"	1 1/2"	HM-2	HM	C4/A-604 SIM	B4/A-604 SIM	--		56.0	
C106	A	WD	3'-0"	7' - 0"	1 3/4"	HM-2	HM	C4/A-604	B4/A-604	A2/A-604		46.0	6
C107	A	WD	3'-0"	7' - 0"	1 3/4"	HM-2	HM	C4/A-604	B4/A-604	--		30.0	
C108	C	WD	3'-0"	7' - 0"	1 3/4"	HM-2	HM	C3/A-604	B3/A-604	--		36.0	
C109	C	WD	3'-0"	7' - 0"	1 3/4"	HM-2	HM	C3/A-604	B3/A-604	--		36.0	
C111	C	WD	3'-0"	7' - 0"	1 3/4"	HM-2	HM	C4/A-604	B4/A-604	--		36.0	
C111A	A	WD	3'-0"	7' - 0"	1 3/4"	HM-2	HM	C4/A-604	B4/A-604	--		34.0	
C112	C	WD	3'-0"	7' - 0"	1 3/4"	HM-2	HM	C4/A-604	B4/A-604	--		36.0	
C113	A	WD	3'-0"	7' - 0"	1 3/4"	HM-2	HM	C4/A-604	B4/A-604	A/A-601		46.0	6
C114	A	WD	3'-0"	7' - 0"	1 3/4"	HM-2	HM	C4/A-604	B4/A-604	--		36.0	
C114A	A	WD	3'-0"	7' - 0"	1 3/4"	HM-2	HM	C4/A-604	B4/A-604	--		36.0	
C115	C	WD	3'-0"	7' - 0"	1 3/4"	HM-2	HM	C4/A-604	B4/A-604	--		36.0	
C116	C	WD	3'-0"	7' - 0"	1 3/4"	HM-2	HM	C4/A-604	B4/A-604	--		36.0	
C117	C	WD	3'-0"	7' - 0"	1 3/4"	HM-2	HM	C3/A-604	B3/A-604	A/A-601		38.0	
C118	A	WD	3'-0"	7' - 0"	1 3/4"	HM-2	HM	C4/A-604	B4/A-604	--		50.0	
C119	C	WD	3'-0"	7' - 0"	1 3/4"	HM-2	HM	C4/A-604	B4/A-604	--		36.0	
C120	C	WD	3'-0"	7' - 0"	1 3/4"	HM-2	HM	C4/A-604	B4/A-604	--		36.0	6
C121	C	WD	3'-0"	7' - 0"	1 3/4"	HM-4	HM	C3/A-604	B3/A-604	A/A-601		38.0	
C122	A	WD	3'-0"	7' - 0"	1 3/4"	HM-2	HM	C4/A-604	B4/A-604	A/A-601	90 MIN	50.0	
C123	A	WD	3'-0"	7' - 0"	1 3/4"	HM-2	HM	C4/A-604	B4/A-604	A2/A-604		46.0	6
C124	A	WD	3'-0"	7' - 0"	1 3/4"	HM-2	HM	C4/A-604	B4/A-604	--		36.0	
C125	C	WD	3'-0"	7' - 0"	1 3/4"	HM-2	HM	C3/A-604	B3/A-604	A/A-601		39.0	
C126A	C	WD	3'-0"	7' - 0"	1 3/4"	HM-2	HM	C3/A-604	B3/A-604	--		31.0	
C126B	C	WD	3'-0"	7' - 0"	1 3/4"	HM-2	HM	C3/A-604	B3/A-604	--		31.0	
C126C	C	WD	3'-0"	7' - 0"	1 3/4"	HM-2	HM	C4/A-604	B4/A-604	A/A-601		39.0	

DOOR SCHEDULE - FIRST FLOOR

DOOR						FRAME							
			SIZE					DETAILS				HDWR	
NUMBER	TYPE	MAT'L	WIDTH	HEIGHT	THICKNESS	TYPE	MAT	HEAD	JAMB	SILL	RATING (MIN)	SET	NOTES
C127A	D	ALUM	PR 3'-0"	7' - 0"	1 3/4"	SF-16	ALUM	A2/A-607	C5/A-606			5.0	3, 4 (INGRESS & EGRESS)
C127B	D	ALUM	PR 3'-0"	7' - 0"	1 3/4"	SF-16	ALUM	A2/A-607	C5/A-606			2.0	
C128A	D	ALUM	PR 3'-0"	7' - 0"	1 3/4"	SF-15	ALUM	C4/A-606	C3/A-501	B5/A-607		4.0	
C128B	D	ALUM	PR 3'-0"	7' - 0"	1 3/4"	SF-15	ALUM	C4/A-606	C3/A-501	B5/A-607		1.0	3, 4 (INGRESS & EGRESS), 5
C129	E	WD	3'-0"	7' - 0"	1 3/4"	HM-2	HM	C4/A-604	B4/A-604	C/A-601		31.0	
C130A	C	WD	PR 3'-0"	7' - 0"	1 3/4"	HM-2	HM	E1/A-608	D1/A-608	B/A-601		16.0	
C130B	C	WD	PR 3'-0"	7' - 0"	1 3/4"	HM-2	HM	E1/A-608	D1/A-608	C/A-601		16.0	
C130C	D	ALUM	3'-0"	7' - 0"	1 3/4"	HM-2	ALUM	D1/A-606	C1/A-606 SIM	B5/A-607			
C131A	A	WD	3'-0"	7' - 0"	1 3/4"	HM-2	HM	E1/A-608	D1/A-608	A2/A-604		36.0	
C131B	A	WD	3'-0"	7' - 0"	1 3/4"	HM-2	HM	E1/A-608	D1/A-608	A2/A-604		36.0	
C131C	A	WD	3'-0"	7' - 0"	1 3/4"	HM-2	HM	E1/A-608	D1/A-608	A2/A-604		36.0	
C131D	A	WD	3'-0"	7' - 0"	1 3/4"	HM-2	HM	E1/A-608	D1/A-608	A2/A-604		36.0	
C134	K	STL	4'8"	4' - 4"	2"	STL	STL	C1/A-607	4/QF-101	3/QF-101		55.0	
C135	A	WD	3'-0"	7' - 0"	1 3/4"	HM-2	HM	C3/A-604	B3/A-604	--		50.1	
C136	A	WD	3'-0"	7' - 0"	1 3/4"	HM-2	HM	C3/A-604	B3/A-604	--		46.0	6
C137	A	WD	3'-0"	7' - 0"	1 3/4"	HM-2	HM	C3/A-604	B3/A-604	--		49.0	6
C138	C	HM	4'-0"	7' - 0"	1 3/4"	HM-2	HM	C1/A-604	B1/A-604	A1/A-604		11.1	3, 5
C139	C	WD	3'-0"	7' - 0"	1 3/4"	HM-2	HM	C3/A-6-4	B3/A-604	--		36.0	
C140	A	HM	4'-0"	7' - 0"	1 3/4"	HM-2	HM	C1/A-604	B1/A-604	A1/A-604		11.2	
C141	A	WD	3'-0"	7' - 0"	1 3/4"	HM-2	HM	C3/A-604	B3/A-604	--		50.0	2, 6
C142	A	HM	PR 3'-0"	7' - 0"	1 3/4"	HM-3	HM	C1/A-604	B1/A-604	A1/A-604		6.0	8
C142A	A	WD	3'-0"	7' - 0"	1 3/4"	HM-2	HM	C3/A-604	B3/A-604	--		22.0	
C142B	A	WD	3'-0"	7' - 0"	1 3/4"	HM-2	HM	C3/A-604	B3/A-604	A2/A604		22.0	
C143	A	HM	PR 3'-0"	7' - 0"	1 3/4"	HM-3	HM	C1/A-604	B1/A-604	A1/A-604		6.0	9
C144	A	HM	PR 3'-0"	7' - 0"	1 3/4"	HM-3	HM	C1/A-604	B1/A-604	A1/A-604		10.0	
C145	A	WD	PR 3'-0"	7' - 0"	1 3/4"	HM-2	HM	E1/A-608	D1/A-608	B/A-601		45.0	
C146	A	WD	3'-0"	7' - 0"	1 3/4"	HM-2	HM	C3/A-604	B3/A-604	A2/A-604		46.0	6
C147	C	WD	3'-0"	7' - 0"	1 3/4"	HM-2	HM	E1/A-608	D1/A-608	C/A-601		36.0	
C148	A	WD	PR 3'-0"	7' - 0"	1 3/4"	HM-2	HM	E1/A-608	D1/A-608	B/A-601		45.0	
C149A	C	WD	PR 3'-0"	7' - 0"	1 3/4"	HM-2	HM	E1/A-608	D1/A-608	C/A-601		16.0	
C149B	C	WD	PR 3'-0"	7' - 0"	1 3/4"	HM-2	HM	E1/A-608	D1/A-608	C/A-601		16.0	
C149C	C	WD	3'-0"	7' - 0"	1 3/4"	HM-2	HM	C3/A-604	B3/A-604	--		18.1	
C150	C	HM	PR 3'-0"	7' - 0"	1 3/4"	HM-3	HM	C1/A-604	B1/A-604	A1/A-604		6.1	3, 5
C151	A	WD	PR 3'-0"	7' - 0"	1 3/4"	HM-2	HM	C3/A-604	B3/A-604	E4/A-608	60 MIN	44.0	6
C153	A	WD	PR 3'-0"	7' - 0"	1 3/4"	HM-2	HM	C3/A-604	B3/A-604	E4/A-608	60 MIN	44.0	6
C154	C	WD	3'-0"	7' - 0"	1 3/4"	HM-2	HM	E1/A-608	D1/A-608	--		31.0	
C155	A	WD	3'-0"	7' - 0"	1 3/4"	HM-2	HM	C3/A-604	B3/A-604	A2/A-604		46.0	6
C156	A	WD	3'-0"	7' - 0"	1 3/4"	HM-2	HM	C3/A-604	B3/A-604	B/A-601		36.0	
C157	C	WD	3'-0"	7' - 0"	1 3/4"	HM-2	HM	C3/A-604	B3/A-604	--		31.0	
C157A	J	STL	4'-0"	8' - 0"	2"	STL	STL	E4/A-607	C4/A-607	B4/A-607		55.0	
C159A	D	ALUM	PR 3'-0"	7' - 0"	1 3/4"	SF-9	ALUM	D1/A-606	C1/A-606	B5/A-607		1.1	
C159B	D	ALUM	PR 3'-0"	7' - 0"	1 3/4"	SF-9	ALUM	D1/A-606	C1/A-606	B5/A-607		3.0	3
C160	A	WD	3'-0"	7' - 0"	1 3/4"	HM-2	HM	C3/A-604	B3/A-604	--		50.0	6
C161	A	WD	PR 3'-0"	7' - 0"	1 3/4"	HM-2	HM	C3/A-604	B3/A-604	--	90 MIN	44.0	

DOOR SCHEDULE - SECOND FLOOR

DOOR						FRAME							
			SIZE					DETAILS				HDWR	
NUMBER	TYPE	MAT'L	WIDTH	HEIGHT	THICKNESS	TYPE	MAT	HEAD	JAMB	SILL	RATING (MIN)	SET	NOTES
A201	C	WD	3'-0"	7' - 0"	1 3/4"	HM-2	HM	C3/A-604	B3/A-604	--		39.0	
A202	A	WD	3'-0"	7' - 0"	1 3/4"	HM-2	HM	C3/A-604	B3/A-604	C/A-601		46.0	6
A204	C	WD	3'-0"	7' - 0"	1 3/4"	HM-2	HM	C3/A-604	B3/A-604	--		39.0	
A205A	C	WD	3'-0"	7' - 0"	1 3/4"	HM-2	HM	C4/A-604	B4/A-604	--		40.0	
A205B	C	WD	3'-0"	7' - 0"	1 3/4"	HM-2	HM	C4/A-604	B4/A-604	--		40.0	
A206	C	WD	3'-0"	7' - 0"	1 3/4"	HM-2	HM	C3/A-604	B3/A-604	--		39.0	
A207	C	WD	3'-0"	7' - 0"	1 3/4"	HM-2	HM	C3/A-604	B3/A-604	--		39.0	
A209A	C	WD	3'-0"	7' - 0"	1 3/4"	HM-2	HM	C4/A-604	B4/A-604	--		40.0	
A209B	C	WD	3'-0"	7' - 0"	1 3/4"	HM-2	HM	C4/A-604	B4/A-604	--		40.0	
A210	C	WD	3'-0"	7' - 0"	1 3/4"	HM-2	HM	C3/A-604	B3/A-604	--		39.0	
A213	C	WD	3'-0"	7' - 0"	1 3/4"	HM-2	HM	C3/A-604	B3/A-604	--		39.0	
A215	A	WD	3'-0"	7' - 0"	1 3/4"	HM-2	HM	C3/A-604	B3/A-604	A2/A-604		46.0	6
A216	A	WD	3'-0"	7' - 0"	1 3/4"	HM-2	HM	C3/A-604	B3/A-604	B/A-601		50.0	6
A218	A	WD	3'-0"	7' - 0"	1 3/4"	HM-2	HM	C3/A-604	B3/A-604	B/A-601		50.0	6
A219	C	WD	3'-0"	7' - 0"	1 3/4"	HM-2	HM	C3/A-604	B3/A-604	--		39.0	2
A220	C	WD	3'-0"	7' - 0"	1 3/4"	HM-2	HM	C3/A-604	B3/A-604	--		39.0	
A221A	C	WD	3'-0"	7' - 0"	1 3/4"	HM-2	HM	C4/A-604	B4/A-604	--		40.0	
A221B	C	WD	3'-0"	7' - 0"	1 3/4"	HM-2	HM	C4/A-604	B4/A-604	--		40.0	
A223A	C	WD	3'-0"	7' - 0"	1 3/4"	HM-2	HM	C4/A-604	B4/A-604	--		40.0	
A223B	C	WD	3'-0"	7' - 0"	1 3/4"	HM-2	HM	C4/A-604	B4/A-604	--		40.0	
A224	C	WD	3'-0"	7' - 0"	1 3/4"	HM-2	HM	C3/A-604	B3/A-604	--		39.0	
A226	C	WD	3'-0"	7' - 0"	1 3/4"	HM-2	HM	C3/A-604	B3/A-604	--		39.0	
A227	A	WD	3'-0"	7' - 0"	1 3/4"	HM-2	HM	C3/A-604	B3/A-604	--		50.0	
A228	C	WD	3'-0"	7' - 0"	1 3/4"	HM-2	HM	C3/A-604	B3/A-604	--		39.0	
A229A	C	WD	3'-0"	7' - 0"	1 3/4"	HM-2	HM	C4/A-604	B4/A-604	--		40.0	
A229B	C	WD	3'-0"	7' - 0"	1 3/4"	HM-2	HM	C4/A-604	B4/A-604	--		40.0	
A230	C	WD	3'-0"	7' - 0"	1 3/4"	HM-2	HM	C3/A-604	B3/A-604	--		39.0	
A231	C	WD	3'-0"	7' - 0"	1 3/4"	HM-2	HM	C3/A-604	B3/A-604	--		39.0	
A232	A	WD	3'-0"	7' - 0"	1 3/4"	HM-2	HM	C3/A-604	B3/A-604	--		50.0	6
A233	C	WD	3'-0"	7' - 0"	1 3/4"	HM-2	HM	C3/A-604	B3/A-604	--		39.0	
A234	C	WD	3'-0"	7' - 0"	1 3/4"	HM-2	HM	C3/A-604	B3/A-604	--		39.0	
A235A	C	WD	3'-0"	7' - 0"	1 3/4"	HM-2	HM	C4/A-604	B4/A-604	--		40.0	
A235B	C	WD	3'-0"	7' - 0"	1 3/4"	HM-2	HM	C4/A-604	B4/A-604	--		40.0	
A236	C	WD	3'-0"	7' - 0"	1 3/4"	HM-2	HM	C3/A-604	B3/A-604	--		39.0	
A237	A	WD	3'-0"	7' - 0"	1 3/4"	HM-2	HM	C3/A-6-4	B3/A-604	--		36.0	
A238	D	WD	3'-0"	7' - 0"	1 3/4"	HM-2	HM	C4/A-604	B4/A-604	--		36.0	
B201	C	WD	3'-0"	7' - 0"	1 3/4"	HM-2	HM	C3/A-604	B3/A-604	--		39.0	
B202	C	WD	3'-0"	7' - 0"	1 3/4"	HM-2	HM	C3/A-604	B3/A-604	--		39.0	
B203	A	WD	3'-0"	7' - 0"	1 3/4"	HM-2	HM	C4/A-604	B4/A-604	C/A-601		46.0	6
B204	C	WD	3'-0"	7' - 0"	1 3/4"	HM-2	HM	C3/A-604	B3/A-604	--		39.0	
B205A	C	WD	3'-0"	7' - 0"	1 3/4"	HM-2	HM	C4/A-604	B4/A-604	--		40.0	
B205B	C	WD	3'-0"	7' - 0"	1 3/4"	HM-2	HM	C4/A-604	B4/A-604	--		40.0	
B206	C	WD	3'-0"	7' - 0"	1 3/4"	HM-2	HM	C3/A-604	B3/A-604	--		39.0	
B209	C	WD	3'-0"	7' - 0"	1 3/4"	HM-2	HM	C3/A-604	B3/A-604	--			2
B210	D	WD	3'-0"	7' - 0"	1 3/4"	HM-2	HM	C4/A-604	B4/A-604	--		36.0	
B212	C	WD	3'-0"	7' - 0"	1 3/4"	HM-2	HM	C3/A-604	B3/A-604	--		39.0	
B213A	C	WD	3'-0"	7' - 0"	1 3/4"	HM-2	HM	C4/A-604	B4/A-604	--		40.0	
B213B	C	WD	3'-0"	7' - 0"	1 3/4"	HM-2	HM	C4/A-604	B4/A-604	--		40.0	
B214	C	WD	3'-0"	7' - 0"	1 3/4"	HM-2	HM	C3/A-604	B3/A-604	--		39.0	
B215	A	WD	3'-0"	7' - 0"	1 3/4"	HM-2	HM	C3/A-604	B3/A-604	--		50.0	
B216	A	WD	3'-0"	7' - 0"	1 3/4"	HM-2	HM	C4/A-604	B4/A-604	C/A-601		46.0	6
B217	C	WD	3'-0"	7' - 0"	1 3/4"	HM-2	HM	C3/A-604	B3/A-604	--		39.0	
B218	C	WD	3'-0"	7' - 0"	1 3/4"	HM-2	HM	C3/A-604	B3/A-604	--		39.0	
B220	A	WD	3'-0"	7' - 0"	1 3/4"	HM-2	HM	C3/A-604	B3/A-604				6
B221	A	WD	3'-0"	7' - 0"	1 3/4"	HM-2	HM	C3/A-6-4	B3/A-604				

DOOR AND FRAME GENERAL NOTES

A. HOLLOW METAL FRAMES INCLUDE HOLLOW METAL INTERIOR VIEW WINDOWS AND DOOR FRAMES.

B. FIELD VERIFY FINISHED OPENING DIMENSIONS FOR FLUSH FRAMES PRIOR TO FABRICATION.

C. PROVIDE JAMB WALL ANCHORS AT ALL DOOR AND INT VIEW WINDOW FRAMES, MIN 3 PER JAMB.

D. PROVIDE SEALANT AT BOTH SIDES OF ALL FRAMES ABUTTING CMU WALLS.

E. AT ALL METAL STUD PARTITIONS, PROVIDE DOUBLE STUDS AT DOOR FRAME JAMBS AND DOUBLE HEADER STUDS AT DOOR FRAME HEAD.

F. AT ALL MASONRY, FILL DOOR FRAME JAMBS SOLID WITH MORTAR.

G. REF STRUCT DWGS FOR CMU BOND BEAM LINTELS AND STEEL ANGLE LINTELS NOT SIZED IN DOOR AND FRAME DETAILS.

H. GLAZING NOTE FOR HOLLOW METAL FRAMES: ALL GLASS SHALL BE TEMPERED UNLESS OTHERWISE NOTED. ALL OPENINGS IN FRAMES OTHER THAN OPENINGS FOR DOORS ARE TO BE GLAZED. PROVIDE CERAMIC GLAZING AT RATED FRAMES AND 1" INSULATED GLASS AT FRAMES ON EXTERIOR OF BUILDING.

J. PROVIDE RATED FRAMES FOR HM WINDOW OPENINGS IN RATED PARTITIONS.

K. PROVIDE CERAMIC GLAZING AT ALL FIRE SEPARATION ASSEMBLY FRAMES.

L. HOLD-OPEN DEVICES ARE NOTED IN SPECIFICATIONS.

M. FOR ALUMINUM STOREFRONT, REFER TO SPECIFICATIONS FOR HARDWARE.

O. REF THIS SHEET FOR TRANSITION AND SILL DETAILS UNLESS OTHERWISE NOTED.

P. REF SPEC SECTION 087100 FOR DOOR DOOR HARDWARE INFORMATION.

Q. DIMENSIONS INDICATED TYPICALLY REPRESENT NOMINAL OPENING SIZE INCLUSIVE OF JOINTS AND SEALANT JOINT WIDTHS. FIELD VERIFY ALL OPENING SIZES PRIOR TO FABRICATION.

DOOR SCHEDULE KEY NOTES

1. MAGNETIC HOLD OPEN.
2. DOORS TO BE SMOKE SEALED.
3. CARD READER FOR ACCESS CONTROL SYSTEM (ACS). REFER ALSO TO AUXILARY SYSTEM DRAWINGS.
4. ACCESSIBILITY (ADA) DOOR OPERATORS. REFER ALSO TO AUXILARY SYSTEM DRAWINGS.
5. KEYPAD FOR ACS DEACTIVATION.
6. 3/4" DOOR UNDERCUT.
7. PROVIDE DOUBLE EGRESS HOLLOW METAL FRAME.
8. PROVIDE ONE (1) 18" X 12" DOOR LOUVER AT EITHER DOOR.
9. PROVIDE ONE (1) 24" X 12" DOOR LOUVER AT EITHER DOOR.

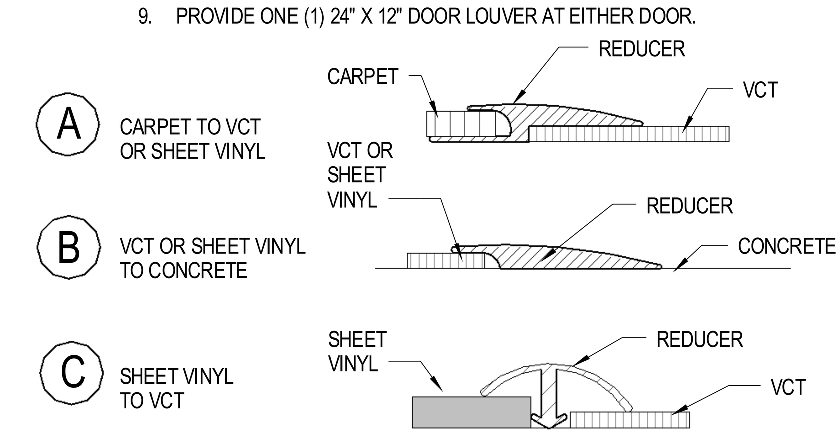

SILL TRANSITION STRIPS

SCALE: 12" = 1'-0"

S.B. Ballard Construction Company

RRMM ARCHITECTS

WALLER TODD & SADLER ARCHITECTS

The Livas Group Architects, P.C.

MARK	DATE	BY	DESCRIPTION

REVISIONS

DATE 03-03-2015
PROJECT 10105.22
DESIGNED LRS
DRAWN HJH
CHECKED DRJ

COMMONWEALTH OF VIRGINIA
DUANE M. HARVER
Lic. No. 6310
03/03/15
ARCHITECT

PROJECT
CITY OF NORFOLK AND NORFOLK PUBLIC SCHOOLS
BROAD CREEK IB ELEMENTARY SCHOOL
NORFOLK, VIRGINIA

SBBCC PROJECT NUMBER: NPS-2014-317
VIRGINIA DEPARTMENT OF EDUCATION: 118-48-00-100

DRAWING
DOOR SCHEDULE AND NOTES

SHEET
A-601

Received by SBBCC 3.2.2015

C:\Users\cgossett\Documents\10105-22 Broad Creek Elem School - Central_cgossett.rvt

3/3/2015 5:39:06 PM

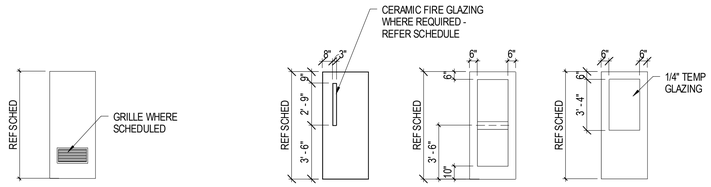

A — SOLID CORE WD OR HM DOOR

C — SOLID CORE WD OR HM DOOR

D — SOLID CORE WD, ALUM OR HM

E — SOLID CORE WD W/ VISION PANEL

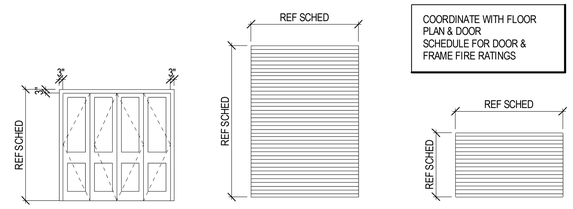

H — BI-FOLD WD DOOR

J — INSULATED OVERHEAD COILING DOOR

K — OVERHEAD COILING SHUTTER

TYPICAL DOOR TYPES

SCALE: 1/4" = 1'-0"

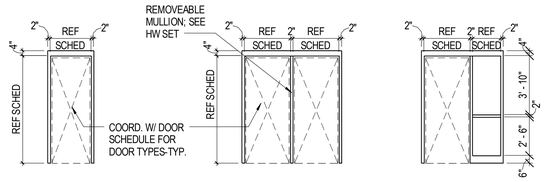

HM-2 — HOLLOW METAL SINGLE DOOR OR PAIR OF DOORS

HM-3 — TWO DOORS W/ REMOVABLE MULLION

HM-4 — HM DOOR FRAME & SIDELIGHT SYSTEM

COORDINATE WITH FLOOR PLAN & DOOR SCHEDULE FOR DOOR & FRAME FIRE RATINGS

TYPICAL DOOR FRAME TYPES

SCALE: 1/4" = 1'-0"

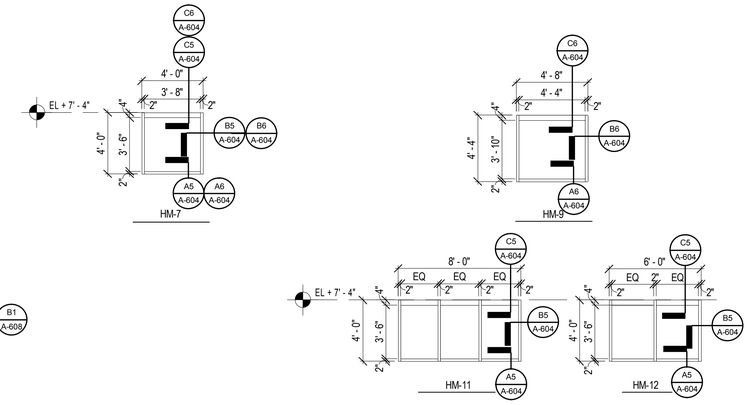

TYPICAL HOLLOW METAL WINDOW FRAME TYPES

SCALE: 1/4" = 1'-0"

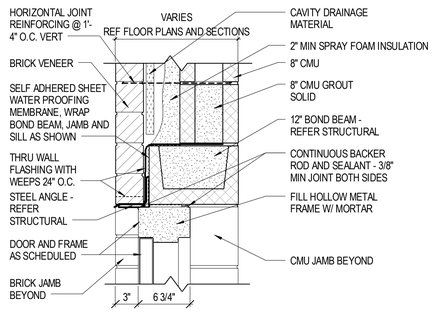

C1 / A-604 HEAD DETAIL
SCALE: 1 1/2" = 1'-0"

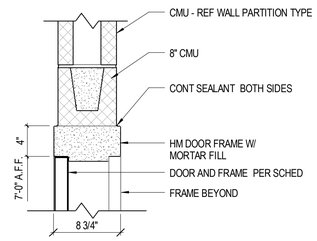

C3 / A-604 HEAD DETAIL
SCALE: 1 1/2" = 1'-0"

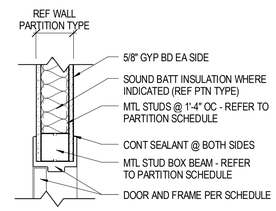

C4 / A-604 HEAD DETAIL
SCALE: 1 1/2" = 1'-0"

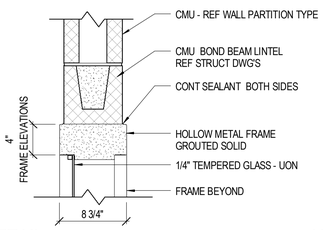

C5 / A-604 HEAD DETAIL
SCALE: 1 1/2" = 1'-0"

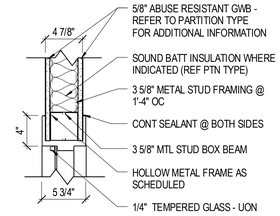

C6 / A-604 HEAD DETAIL
SCALE: 1 1/2" = 1'-0"

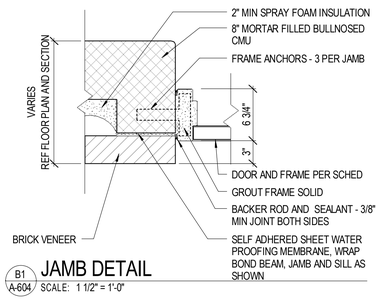

B1 / A-604 JAMB DETAIL
SCALE: 1 1/2" = 1'-0"

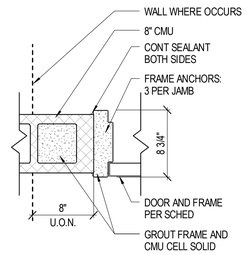

B3 / A-604 JAMB DETAIL
SCALE: 1 1/2" = 1'-0"

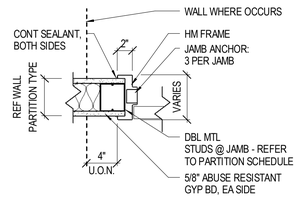

B4 / A-604 JAMB DETAIL
SCALE: 1 1/2" = 1'-0"

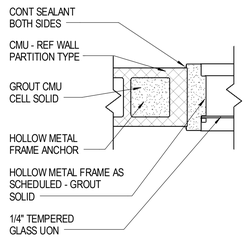

B5 / A-604 JAMB DETAIL
SCALE: 1 1/2" = 1'-0"

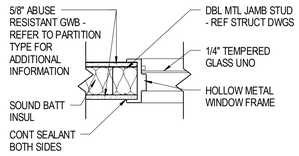

B6 / A-604 JAMB DETAIL
SCALE: 1 1/2" = 1'-0"

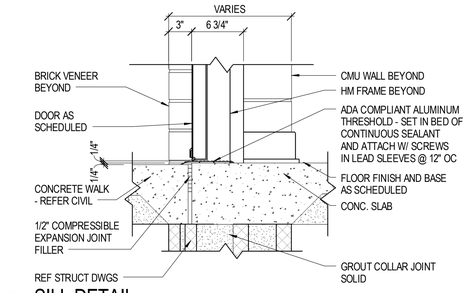

A1 / A-604 SILL DETAIL
SCALE: 1 1/2" = 1'-0"

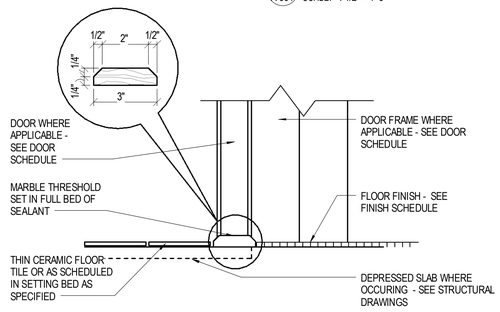

A2 / A-604 SILL DETAIL
SCALE: 3" = 1'-0"

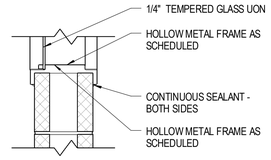

A5 / A-604 SILL DETAIL
SCALE: 1 1/2" = 1'-0"

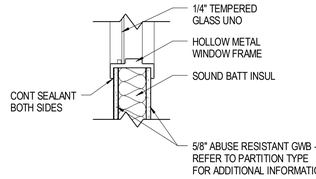

A6 / A-604 SILL DETAIL
SCALE: 1 1/2" = 1'-0"

Received by SBBCC 3.2.2015

1/32" = 1'-0" | 1/16" = 1'-0" | 3/32" = 1'-0" | 1/8" = 1'-0" | 1/4" = 1'-0" | 3/8" = 1'-0" | 1/2" = 1'-0" | 3/4" = 1'-0" | 1" = 1'-0" | 1 1/2" = 1'-0" | 3" = 1'-0" | 6" = 1'-0" | 12" = 1'-0"

S.B. Ballard Construction Company

RRMM ARCHITECTS

WALLER TODD & SADLER ARCHITECTS

The Livas Group Architects, P.C.

MARK	DATE	REVISIONS	BY	DESCRIPTION

DATE	03-03-2015	
PROJECT	10105.22	
DESIGNED	LRS	HJH
DRAWN		DRJ
CHECKED		

COMMONWEALTH OF VIRGINIA — C. DUANE M. HARVER — Lic. No. 6310 — 03/03/15 — ARCHITECT

PROJECT: CITY OF NORFOLK AND NORFOLK PUBLIC SCHOOLS
BROAD CREEK IB ELEMENTARY SCHOOL
NORFOLK, VIRGINIA

SBBCC PROJECT NUMBER: NPS-2014-317
VIRGINIA DEPARTMENT OF EDUCATION: 118-48-00-100

DRAWING: FRAME & DOOR ELEVATIONS & DETAILS

SHEET

A-604

C:\Users\rgossett\Documents\10105-22 Broad Creek Elem School - Central_cgossett.rvt

3/3/2015 5:39:13 PM

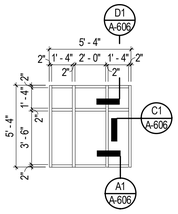

SF-1
SCALE: 1/4" = 1'-0"

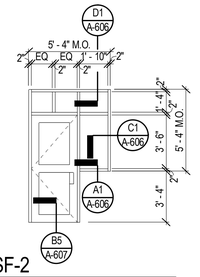

SF-2
SCALE: 1/4" = 1'-0"

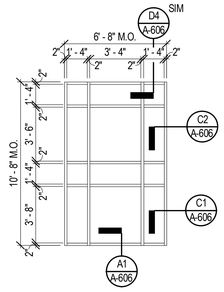

SF-4
SCALE: 1/4" = 1'-0"

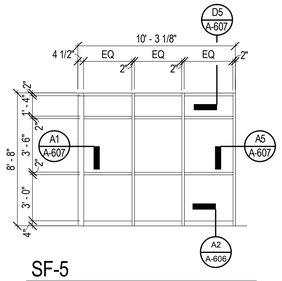

SF-5
SCALE: 1/4" = 1'-0"

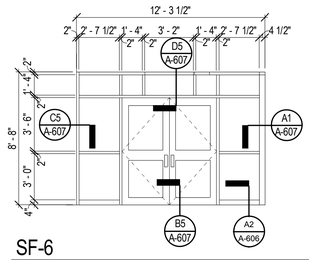

SF-6
SCALE: 1/4" = 1'-0"

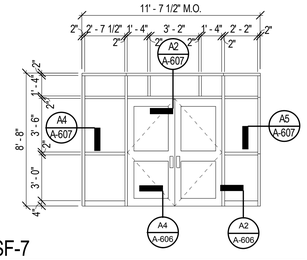

SF-7
SCALE: 1/4" = 1'-0"

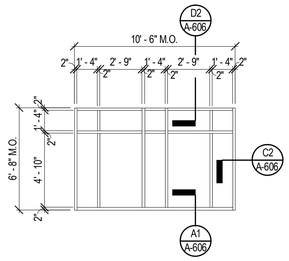

SF-8
SCALE: 1/4" = 1'-0"

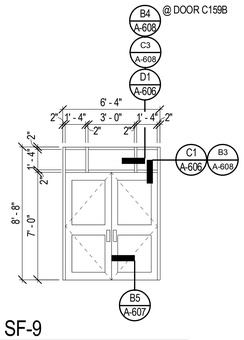

SF-9
SCALE: 1/4" = 1'-0"

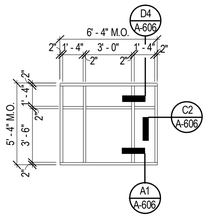

SF-10
SCALE: 1/4" = 1'-0"

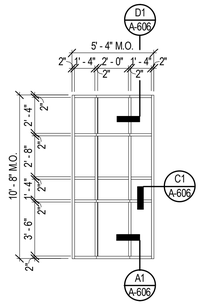

SF-11
SCALE: 1/4" = 1'-0"

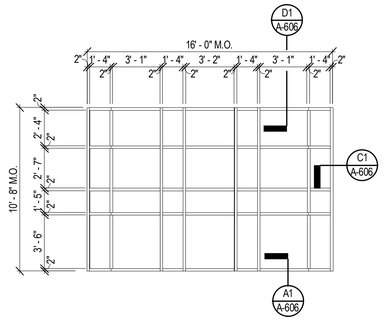

SF-12
SCALE: 1/4" = 1'-0"

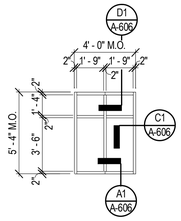

SF-14
SCALE: 1/4" = 1'-0"

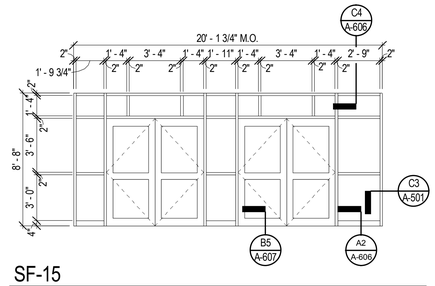

SF-15
SCALE: 1/4" = 1'-0"

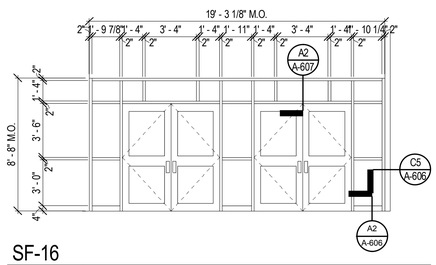

SF-16
SCALE: 1/4" = 1'-0"

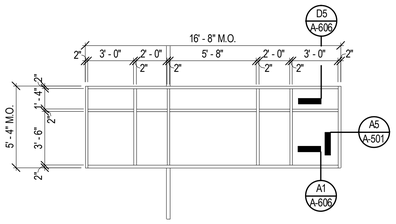

SF-17
SCALE: 1/4" = 1'-0"

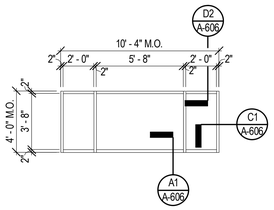

SF-18
SCALE: 1/4" = 1'-0"

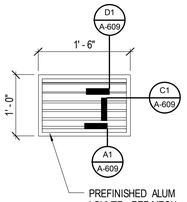

L1
SCALE: 1" = 1'-0"

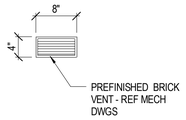

BV-1
SCALE: 1" = 1'-0"

NOTE: COORDINATE ALL LOUVER LOCATIONS AND LOUVER SIZES WITH MECHANICAL

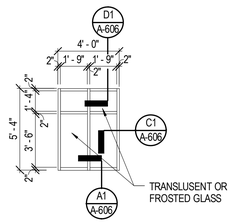

SF-21
SCALE: 1/4" = 1'-0"

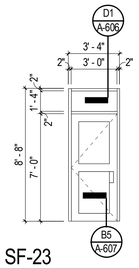

SF-23
SCALE: 1/4" = 1'-0"

GLAZING TYPES LEGEND

	1" THICK INSULATED GLAZING @ EXTERIOR 1/4" THICK CLEAR GLAZING @ INTERIOR

Received by SBBCC 3.2.2015

S.B. Ballard Construction Company

RRMM ARCHITECTS

WALLER TODD & SADLER ARCHITECTS

The Livas Group Architects, P.C.

MARK	DATE	DESCRIPTION	BY
		REVISIONS	

DATE	03-03-2015
PROJECT	10105.22
DESIGNED	LRS
DRAWN	HJH
CHECKED	DRJ

COMMONWEALTH OF VIRGINIA
DUANE M. HARVER
Lic. No. 6310
03/03/15
ARCHITECT

PROJECT
CITY OF NORFOLK AND NORFOLK PUBLIC SCHOOLS
BROAD CREEK IB ELEMENTARY SCHOOL
NORFOLK, VIRGINIA

SBBCC PROJECT NUMBER: NPS-2014-317
VIRGINIA DEPARTMENT OF EDUCATION: 118-46-00-100

DRAWING
FRAME ELEVATIONS

SHEET
A-605

C:\Users\rgossett\Documents\10105-22 Broad Creek Elem School - Central_cgossett.rvt
3/3/2015 5:39:23 PM

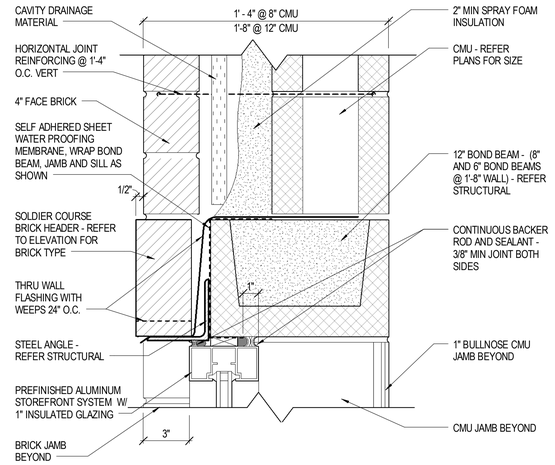

D1 / A-606 HEAD DETAIL
SCALE: 3" = 1'-0"

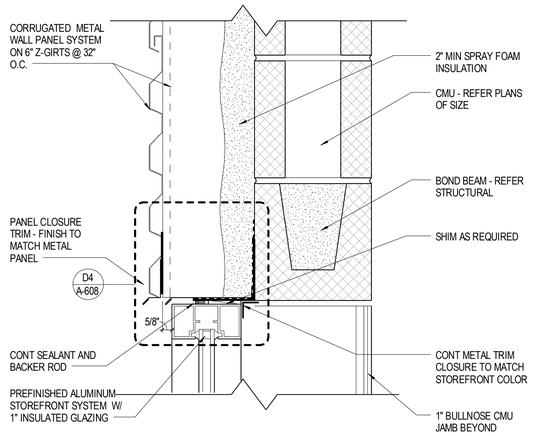

D2 / A-606 HEAD DETAIL
SCALE: 3" = 1'-0"

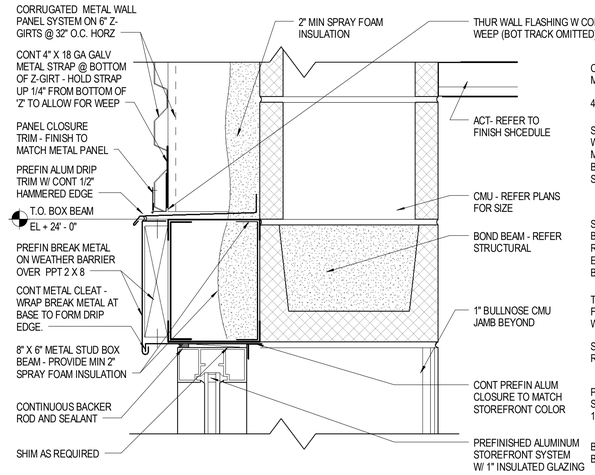

D4 / A-606 HEAD DETAIL
SCALE: 3" = 1'-0"

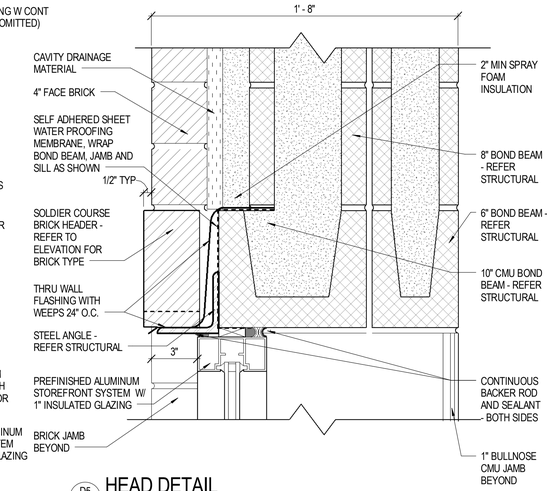

D5 / A-606 HEAD DETAIL
SCALE: 3" = 1'-0"

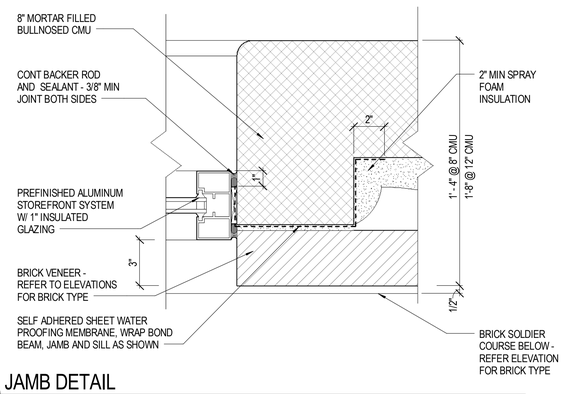

C1 / A-606 JAMB DETAIL
SCALE: 3" = 1'-0"

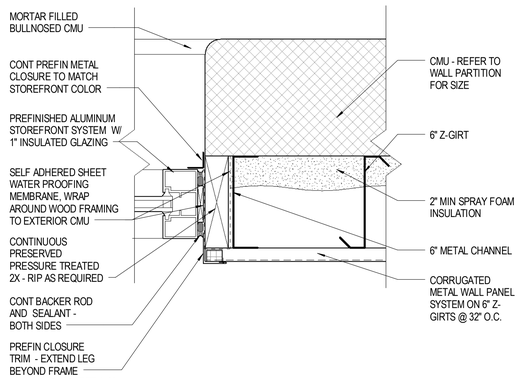

C2 / A-606 JAMB DETAIL
SCALE: 3" = 1'-0"

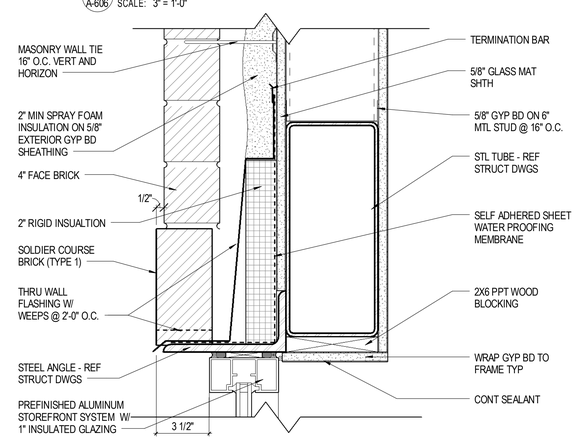

C4 / A-606 HEAD DETAIL
SCALE: 3" = 1'-0"

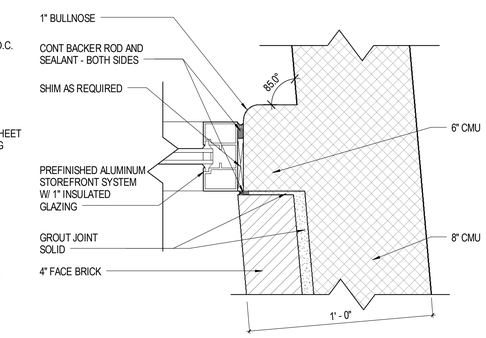

C5 / A-606 JAMB DETAIL
SCALE: 3" = 1'-0"

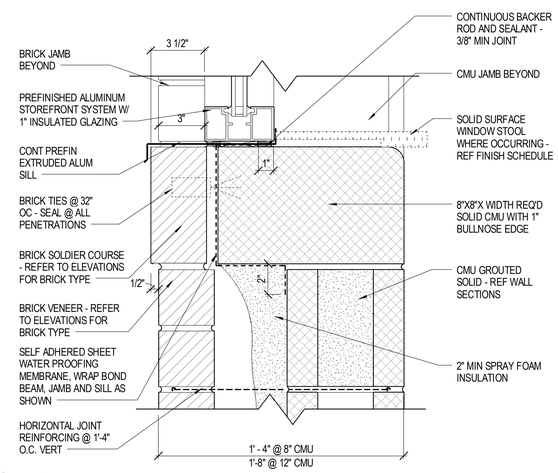

A1 / A-606 SILL DETAIL
SCALE: 3" = 1'-0"

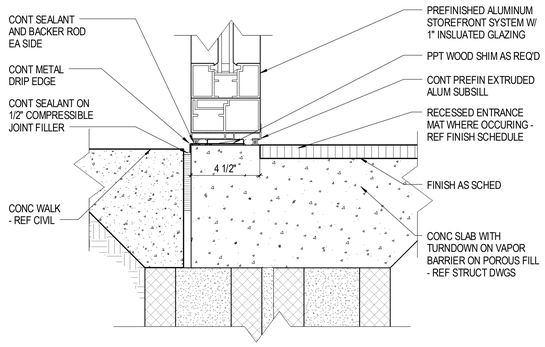

A2 / A-606 SILL DETAIL
SCALE: 3" = 1'-0"

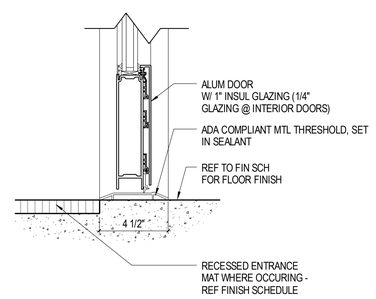

A4 / A-606 SILL DETAIL
SCALE: 3" = 1'-0"

Received by SBBCC 3.2.2015

S.B. Ballard Construction Company

RRMM ARCHITECTS

WALLER TODD & SADLER ARCHITECTS

The Livas Group Architects, P.C.

MARK	DATE	DESCRIPTION	BY
REVISIONS			

DATE	03-03-2015
PROJECT	10105.22
DESIGNED	LRS
DRAWN	HJH
CHECKED	DRJ

COMMONWEALTH OF VIRGINIA
C. DUANE M. HARVER
Lic. No. 6310
03/03/15
ARCHITECT

PROJECT
CITY OF NORFOLK AND NORFOLK PUBLIC SCHOOLS
BROAD CREEK IB ELEMENTARY SCHOOL
NORFOLK, VIRGINIA

SBBCC PROJECT NUMBER: NPS-2014-317
VIRGINIA DEPARTMENT OF EDUCATION: 118-48-00-100

DRAWING
FRAME DETAILS

SHEET
A-606

C:\Users\rgossett\Documents\10105-22 Broad Creek Elem School - Central_rgossett.rvt

3/3/2015 5:39:35 PM

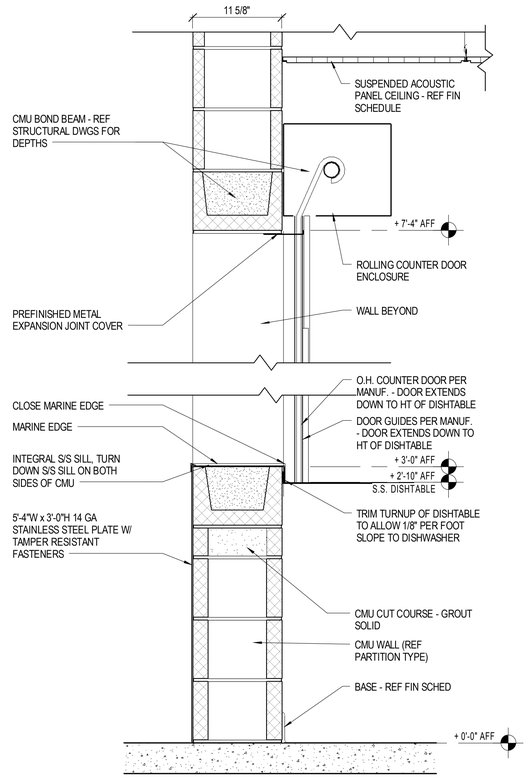

C1 A-607 HEAD AND SILL DETAIL @ COILING DOOR C134
SCALE: 1 1/2" = 1'-0"

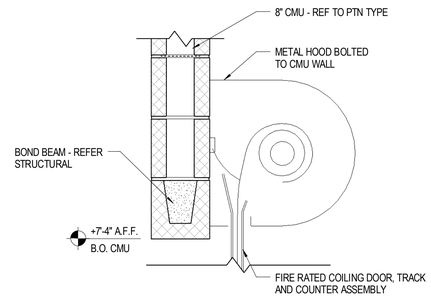

E2 A-607 HEAD DETAIL @ COILING DOOR
SCALE: 1 1/2" = 1'-0"

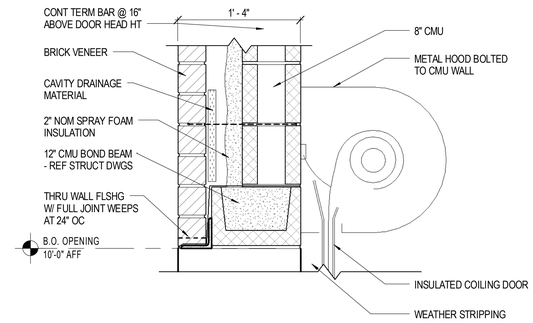

E4 A-607 HEAD DETAIL @ COILING DOOR C157A
SCALE: 1 1/2" = 1'-0"

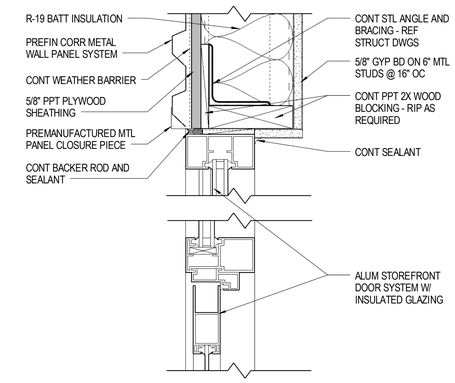

D5 A-607 HEAD DETAIL - EXT SF DOOR
SCALE: 3" = 1'-0"

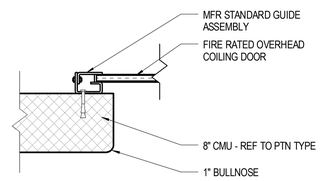

C2 A-607 JAMB DETAIL @ COILING DOOR A123A
SCALE: 1 1/2" = 1'-0"

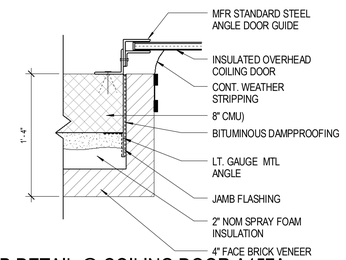

C4 A-607 JAMB DETAIL @ COILING DOOR A157A
SCALE: 1 1/2" = 1'-0"

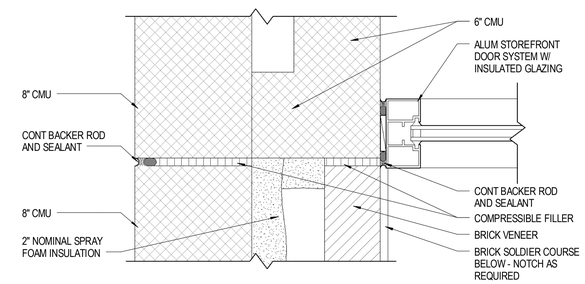

C5 A-607 JAMB DETAIL - EXT SF DOOR
SCALE: 3" = 1'-0"

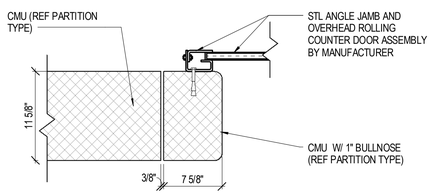

B1 A-607 JAMB DETAIL @ COILING DOOR C134
SCALE: 1 1/2" = 1'-0"

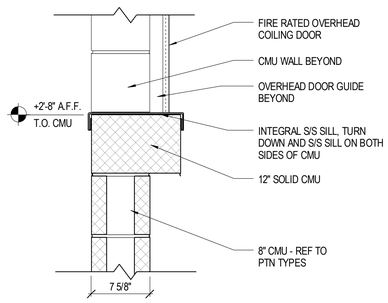

B2 A-607 SILL DETAIL @ COILING DOOR A123A
SCALE: 1 1/2" = 1'-0"

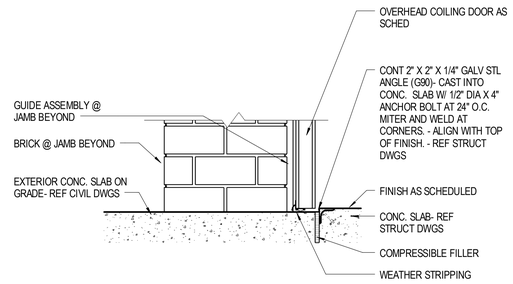

B4 A-607 SILL DETAIL @ COILING DOOR C157A
SCALE: 1 1/2" = 1'-0"

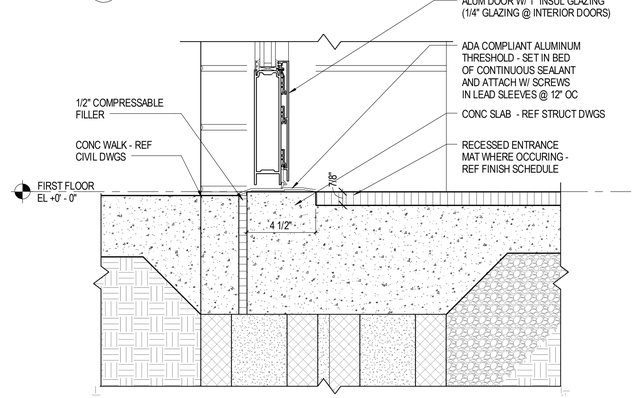

B5 A-607 SILL DETAIL - EXT SF DOOR
SCALE: 3" = 1'-0"

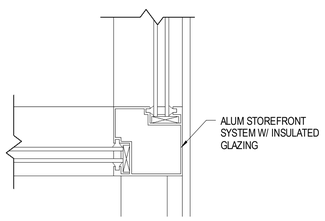

A1 A-607 JAMB DETAIL - EXT SF CORNER
SCALE: 3" = 1'-0"

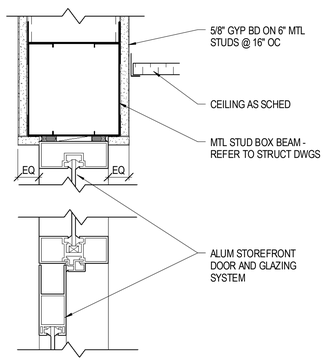

A2 A-607 INT SF DOOR HEAD W TRANSOM
SCALE: 3" = 1'-0"

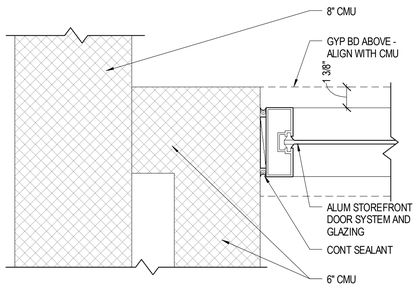

A4 A-607 INT SF DOOR JAMB 2
SCALE: 3" = 1'-0"

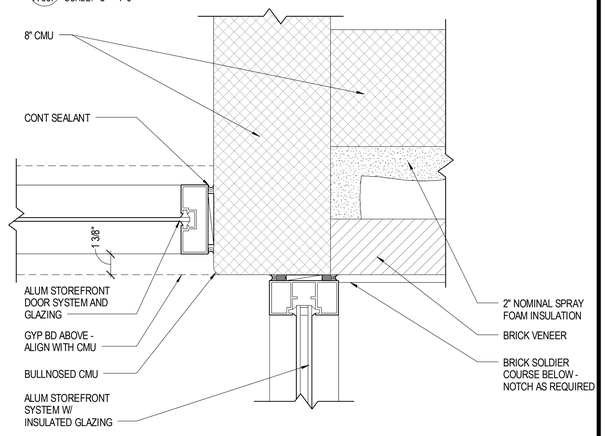

A5 A-607 INT SF DOOR JAMB 1
SCALE: 3" = 1'-0"

Received by SBBCC 3.2.2015

S.B. Ballard Construction Company
RRMM ARCHITECTS
WALLER TODD & SADLER ARCHITECTS
The Livas Group Architects, P.C.

MARK	DATE	BY	DESCRIPTION
REVISIONS			

DATE	03-03-2015
PROJECT	10105.22
DESIGNED	LRS
DRAWN	HJH
CHECKED	DRJ

COMMONWEALTH OF VIRGINIA
C. DUANE M. HARVER
Lic. No. 6310
03/03/15
ARCHITECT

SBBCC PROJECT NUMBER: NFS-2014-317
VIRGINIA DEPARTMENT OF EDUCATION 16-48-00-100

PROJECT
CITY OF NORFOLK AND NORFOLK PUBLIC SCHOOLS
BROAD CREEK IB ELEMENTARY SCHOOL
NORFOLK, VIRGINIA

DRAWING
DOOR & FRAME DETAILS

SHEET
A-607

C:\Users\rgossett\Documents\10105.22 Broad Creek Elem School - Central_rgossett.rvt
3/3/2015 5:39:46 PM

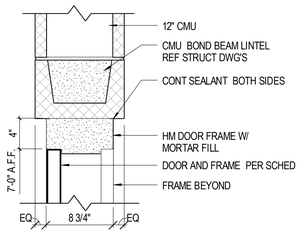

E1 A-608 HEAD DETAIL
SCALE: 1 1/2" = 1'-0"

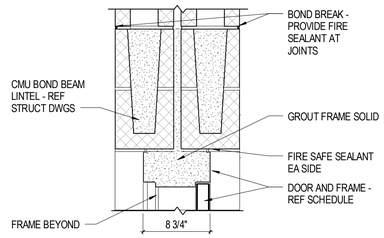

E2 A-608 HEAD DETAIL - DOOR A125
SCALE: 1 1/2" = 1'-0"

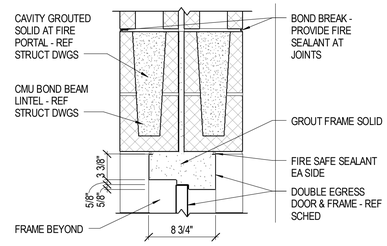

E3 A-608 HEAD DETAIL - DOOR B106
SCALE: 1 1/2" = 1'-0"

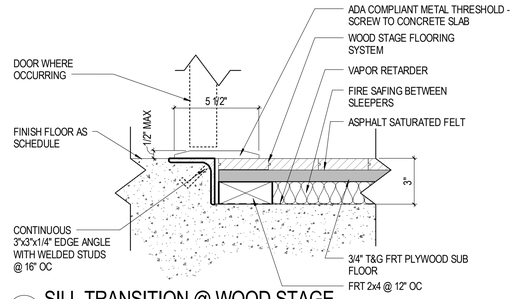

E4 A-608 SILL TRANSITION @ WOOD STAGE
SCALE: 3" = 1'-0"

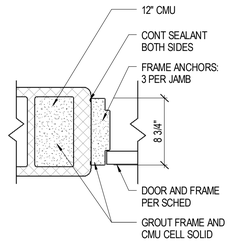

D1 A-608 JAMB DETAIL
SCALE: 1 1/2" = 1'-0"

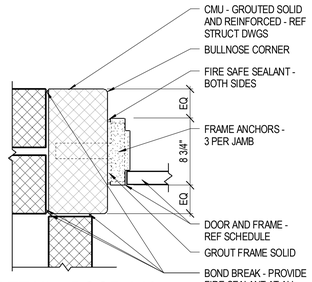

D2 A-608 JAMB DETAIL - DOOR A125
SCALE: 1 1/2" = 1'-0"

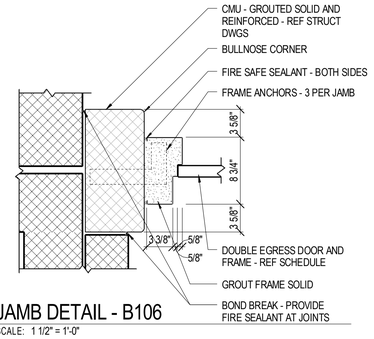

D3 A-608 JAMB DETAIL - B106
SCALE: 1 1/2" = 1'-0"

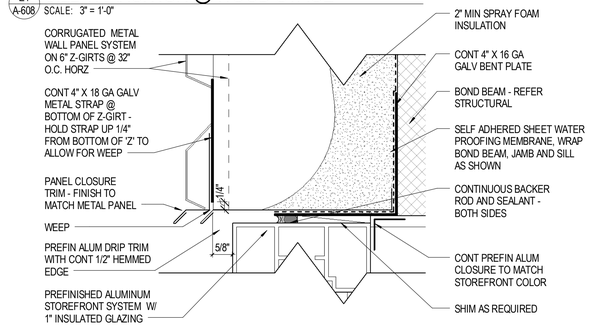

D4 A-608 ENLARGED METAL WALL PANEL ENCLOSURE
SCALE: 6" = 1'-0"

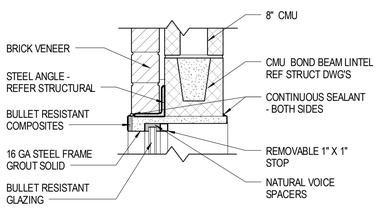

C1 A-608 HEAD DETAIL
SCALE: 1 1/2" = 1'-0"

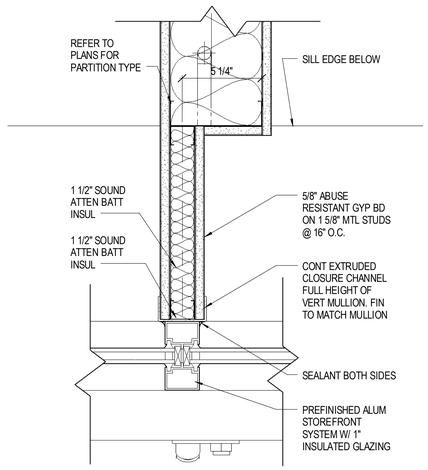

B2 A-608 SF JAMB DETAIL - @ INTERMEDIATE MULLION
SCALE: 3" = 1'-0"

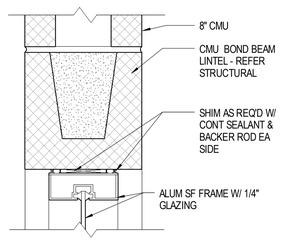

C3 A-608 HEAD DETAIL
SCALE: 3" = 1'-0"

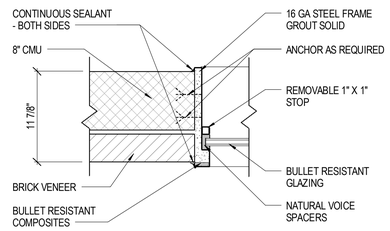

B1 A-608 JAMB DETAIL
SCALE: 1 1/2" = 1'-0"

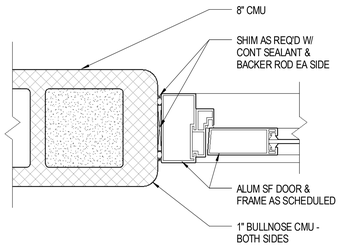

B3 A-608 JAMB DETAIL
SCALE: 3" = 1'-0"

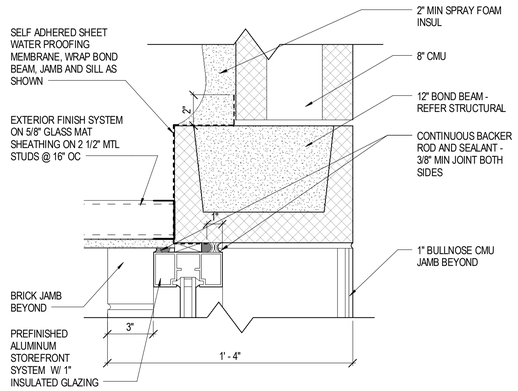

B4 A-608 HEAD DETAIL
SCALE: 3" = 1'-0"

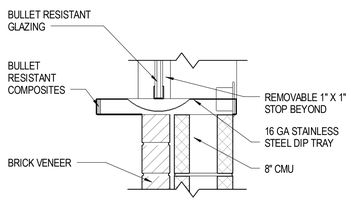

A1 A-608 SILL DETAIL
SCALE: 1 1/2" = 1'-0"

Received by SBBCC 3.2.2015

S.B. Ballard Construction Company
RRMM ARCHITECTS
WALLER TODD & SADLER ARCHITECTS
The Livas Group Architects, P.C.

MARK	DATE	BY	DESCRIPTION
REVISIONS			

DATE	03-03-2015
PROJECT	10105.22
DESIGNED	LRS
DRAWN	HJH
CHECKED	DRJ

COMMONWEALTH OF VIRGINIA
DUANE M. HARVER
Lic. No. 6310
03/03/15
ARCHITECT

PROJECT
CITY OF NORFOLK AND NORFOLK PUBLIC SCHOOLS
BROAD CREEK IB ELEMENTARY SCHOOL
NORFOLK, VIRGINIA
SBBCC PROJECT NUMBER: NPS-2014-317
VIRGINIA DEPARTMENT OF EDUCATION: 118-46-00-100

DRAWING
FRAME DETAILS

SHEET
A-608

C:\Users\rgossett\Documents\10105-22 Broad Creek Elem School - Central_cgossett.rvt
3/3/2015 5:39:57 PM

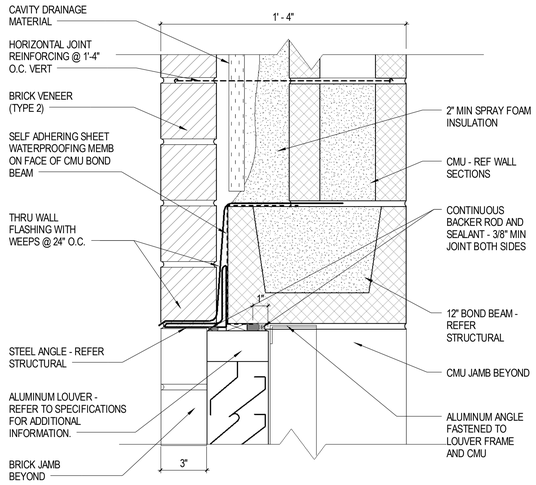

D1 / A-609 HEAD DETAIL @ LOUVER
SCALE: 3" = 1'-0"

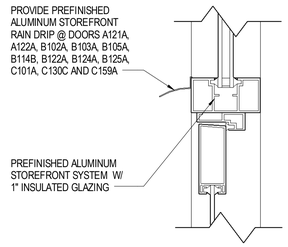

D3 / A-609 HEAD DETAIL - RAIN DRIP
SCALE: 3" = 1'-0"

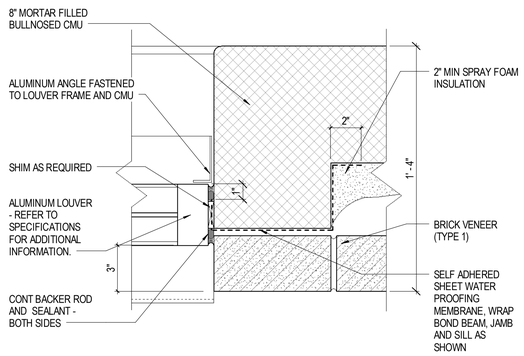

C1 / A-609 JAMB DETAIL @ LOUVER
SCALE: 3" = 1'-0"

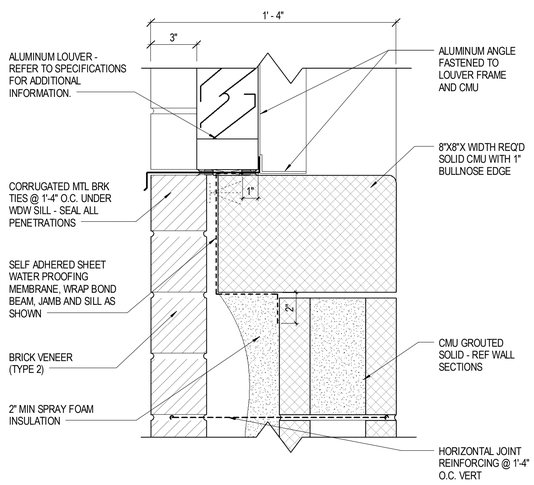

A1 / A-609 SILL DETAIL @ LOUVER
SCALE: 3" = 1'-0"

Received by SBBCC 3.2.2015

S.B. Ballard Construction Company
RRMM ARCHITECTS
WALLER TODD & SADLER ARCHITECTS
The Livas Group Architects, P.C.

MARK	DATE	BY	DESCRIPTION
REVISIONS			

DATE	03-03-2015
PROJECT	10105.22
DESIGNED	LRS
DRAWN	HJH
CHECKED	DRJ

COMMONWEALTH OF VIRGINIA
DUANE M. HARVER
Lic. No. 6313
03/03/15
ARCHITECT

SBBCC PROJECT NUMBER: NPS-2014-317
VIRGINIA DEPARTMENT OF EDUCATION: 118-46-00-100

PROJECT
CITY OF NORFOLK AND NORFOLK PUBLIC SCHOOLS
BROAD CREEK IB ELEMENTARY SCHOOL
NORFOLK, VIRGINIA

DRAWING
FRAME DETAILS

SHEET
A-609

C:\Users\rgossett\Documents\10105-22 Broad Creek Elem School - Central_cgossett.rvt
3/3/2015 5:40:00 PM

FINISH SCHEDULE

ROOM NUMBER	ROOM NAME	FLOOR	WALL BASE	WALLS N	WALLS S	WALLS E	WALLS W	CEILING	NOTES
A101	STAIR 1	VCT1.2.3 / CONC	RB1	PT1	PT1	PT1	PT1	ACT1 / PT3.6	2
A102	SP ED	VCT1.2.3	RB1	PT1	PT1	PT1	PT3	ACT1	3
A103	TOILET	SV1	SVB1	PT1	PT1	PT1	PT1	ACT2	
A104	STOR	VCT1	RB1	PT1	PT1	PT1	PT1	ACT1	
A105	1ST GRADE	VCT1.2.3	RB1	PT1	PT1	PT1	PT3	ACT1	3
A106	TOILET	SV1	SVB1	PT1	PT1	PT1	PT1	ACT2	
A107	1ST GRADE	VCT1.2.3	RB1	PT1	PT1	PT3	PT1	ACT1	3
A108	CORRIDOR	VCT1.2.3.4.5	RB1	PT1	PT1	PT1	PT1	ACT1 / PT3	10
A109	STORAGE	VCT1	RB1	PT1	PT1	PT1	PT1	ACT1	
A110	IDF	VCT1	RB1	PT1	PT1	PT1	PT1	PT6	
A110.1	ELEC	CONC1	RB1	PT1	PT1	PT1	PT1	ACT1	
A111	BOYS	PRT1	CTB1	PT1	PT1	CT1.2.3 / PT1	CT1.2.3 / PT1	ACT2	9
A112	GIRLS	PRT1	CTB1	PT1	PT1	CT1.2.3 / PT1	CT1.2.3 / PT1	ACT2	9
A113	MECH	CONC	RB1	PT1	PT1	PT1	PT1	ACT1	
A114	ELEV	VCT1	--	--	--	--	--	--	
A115	EQMT	CONC1	RB1	PT1	PT1	PT1	PT1	PT6	
A116	VESTIBULE	EM1	RB2	PT1	PT1	PT1	PT1	ACT1	
A117	ART	VCT1.2.3	RB1	PT1	PT4	PT1	PT1	ACT1	7
A118	KILN	VCT1	RB1	PT1	PT1	PT1	PT1	ACT1	
A119	STORAGE	VCT1	RB1	PT1	PT1	PT1	PT1	ACT1	
A120	CUST	CONC1	RB1	PT1	PT1	PT1	PT1	ACT2	
A121	KINDERGARTEN	VCT1.2.3	RB1	PT1	PT1	PT1	PT4	ACT1	3
A122	PRE-K	VCT1.2.3	RB1	PT1	PT1	PT1	PT4	ACT1	3
A123	SCHOOL STORE	VCT1	RB1	PT1	PT1	PT1	PT1	PT6	
A124	STAIR 2	VCT1.2.3.4.5 / RT1 /ST1	RB1	PT1	PT1	PT1	PT1	ACT1 / PT2.3.4.6	2.11
A125	CORRIDOR	VCT1.2.3.4.5	RB1	PT1	PT1	PT1	PT1	ACT1 / PT3	
A126	BOYS	PRT1	CTB1	PT1	PT1	CT1.2.3 / PT1	CT1.2.3 / PT1	ACT2	9
A127	GIRLS	PRT1	CTB1	PT1	PT1	CT1.2.3 / PT1	CT1.2.3 / PT1	ACT2	9
A128	COMMONS	VCT1.2.3.4.5	RB1	PT1	PT1	PT1	PT4	ACT1 / PT2.3.4	12.13.18
A129	TOILET	PRT1	CTB1	PT1	CT1.2.3 / PT1	PT1	PT1	ACT2	9
A130	TEACHER WORK	VCT1.2.3	RB1	PT1	PT1	PT1	PT3	ACT1	7
A131	RESOURCE	VCT1.2.3	RB1	PT1	PT1	PT1	PT3	ACT1	3
A132	1ST GRADE	VCT1.2.3	RB1	PT1	PT1	PT3	PT1	ACT1	3
A133	TOILET	SV1	SVB1	PT1	PT1	PT1	PT1	ACT2	
A134	1ST GRADE	VCT1.2.3	RB1	PT1	PT1	PT1	PT3	ACT1	3
A135	TOILET	SV1	SVB1	PT1	PT1	PT1	PT1	ACT2	
A136	1ST GRADE	VCT1.2.3	RB1	PT1	PT1	PT1	PT3	ACT1	3
A137	TOILET	SV1	RB1	PT1	PT1	PT1	PT1	ACT2	
A138	OT/PT	VCT1.2.3	RB1	PT1	PT1	PT1	PT3	ACT1	3
A139	CORRIDOR	VCT1.2.3.4.5	RB1	PT1	PT1	PT1	PT1	ACT1 / PT3	10
A140	MUSIC	VCT1.2.3	RB1	PT1	PT1	PT3	PT1	ACT1	3.15
A141	OFFICE	CPT1	RB2	PT1	PT1	PT2	PT1	ACT1	
A142	STORAGE	VCT1	RB1	PT1	PT1	PT1	PT1	ACT1	
A143	BAND	VCT1.2.3	RB1	PT1	PT1	PT3	PT1	ACT1	3.17
B101	TOILET	SV1	SVB1	PT1	PT1	PT1	PT1	ACT2	
B102	KINDERGARTEN	VCT1.2.3	RB1	PT1	PT1	PT4	PT1	ACT1	3
B103	KINDERGARTEN	VCT1.2.3	RB1	PT1	PT1	PT1	PT4	ACT1	3
B104	TOILET	SV1	SVB1	PT1	PT1	PT1	PT1	ACT2	
B105	KINDERGARTEN	VCT1.2.3	RB1	PT1	PT1	PT4	PT1	ACT1	3
B106	CORRIDOR	VCT1.2.3.4.5	RB1	PT1	PT1	PT1	PT1	ACT1 / PT4	10
B107	PARENT RESOURCE	VCT1.2.3	RB1	PT1	PT1	PT4	PT1	ACT1	7
B108	COMMONS	VCT1.2.3.4.5	RB1	PT1	PT1	PT4	PT1	ACT1 / PT4.5	11.18
B109	STAIR 3	VCT1.2.3 / CONC	RB1	PT1	PT1	PT1	PT1	ACT1 / PT4.6	2
B110	TOILET	SV1	SVB1	PT1	PT1	PT1	PT1	ACT2	
B111	PRE-K	VCT1.2.3	RB1	PT1	PT4	PT1	PT1	ACT1	3
B112	PRODUCTION	CPT1	RB2	PT1	PT1	PT3	PT1	ACT1	
B113	EDIT	CPT1	RB2	PT1	PT1	PT3	PT1	ACT1	
B114	DISCOVERY CENTER	CPT1.2.3	RB2	PT1.5	PT1.5	PT1.5	PT1.5	ACT1 / PT3	16.20.21
B115	WORKROOM	VCT1.2.3	RB1	PT1	PT3	PT1	PT1	ACT1	3
B116	STORAGE	VCT1	RB1	PT1	PT1	PT1	PT1	ACT1	
B117	OFFICE	CPT1	RB2	PT1	PT1	PT1	PT2	ACT1	
B118	TOILET	PRT1	PRTB1	PT1	PT1	PT1	CT1.2.3 / PT1	ACT2	9
B119	MDF	VCT1	RB1	PT1	PT1	PT1	PT1	ACT1	
B120	HELP/IIT	VCT1	RB1	PT1	PT1	PT1	PT1	ACT1	
B121	PRE-K	VCT1.2.3	RB1	PT1	PT1	PT1	PT4	ACT1	3
B122	PRE-K	VCT1.2.3	RB1	PT1	PT1	PT4	PT1	ACT1	3
B123	TOILET	SV1	SVB1	PT1	PT1	PT1	PT1	ACT2	
B124	PRE-K	VCT1.2.3	RB1	PT1	PT1	PT1	PT4	ACT1	3
B125	PRE-K	VCT1.2.3	RB1	PT1	PT1	PT4	PT1	ACT1	3
B126	TOILET	SV1	SVB1	PT1	PT1	PT1	PT1	ACT2	
B127	ELEC	CONC1	RB1	PT1	PT1	PT1	PT1	PT6	
C101	CORRIDOR	VCT1.2.3.4.5	RB1	PT1	PT1	PT1	PT1	ACT1 / PT4	10
C102	RECEPTION	VCT1.2.3.4.5	RB1	P3	PT1	PT1	PT1	ACT2	
C103	CLINIC	VCT1.2.3.4.5	RB1	PT1	PT1	PT1	PT1	ACT2	7
C104	W/D	VCT1	RB1	PT1	PT1	PT1	PT1	ACT2	
C105	COTS	VCT1.2.3	RB1	PT1	PT1	PT1	PT1	ACT2	4
C106	TOILET/ SHOWER	PRT1	CTB1 / PRTB1	PT1	PT1	PT1	CT1.2.3 / PT1	ACT2 / PT6	1.9
C107	EXAM	VCT1	RB1	PT1	PT1	PT1	PT1	ACT2	
C108	ESL	VCT1.2.3	RB1	PT1	PT1	PT3	PT1	ACT1	
C109	ISS	VCT1.2.3	RB1	PT1	PT1	PT3	PT1	ACT1	
C110	BREAK	VCT1.2.3	RB1	PT1	PT1	PT2	PT1	ACT1	7
C111	CONF	CPT1	RB2	PT1	PT1	PT1	PT4	ACT1	
C112	PRINCIPAL	CPT1	RB2	PT1	PT1	PT1	PT3	ACT1	
C113	TOILET	SV1	SVB1	PT1	PT1	PT1	PT1	ACT2	
C114	CLOSET	CPT1	RB2	PT1	PT1	PT1	PT1	ACT1	
C114.1	CLOSET	CPT1	RB2	PT1	PT1	PT1	PT1	ACT1	
C115	BOOK KEEPER	CPT1	RB2	PT1	PT2	PT1	PT1	ACT1	
C116	AP	CPT1	RB2	PT1	PT2	PT1	PT1	ACT1	
C117	CORRIDOR	CPT1.2.3	RB2	PT1	PT1	PT1	PT1	ACT1 / PT4	21
C118	STORAGE	CPT1	RB2	PT1	PT1	PT1	PT1	ACT1	
C119	GUID OFFICE	CPT1	RB2	PT1	PT1	PT2	PT1	ACT1	
C120	GUID OFFICE	CPT1	RB2	PT1	PT1	PT2	PT1	ACT1	
C121	WAIT	CPT1.2.3	RB2	PT1	PT1	PT1	PT1	ACT1	21
C122	RECORDS	VCT1	RB1	PT1	PT1	PT1	PT1	ACT1	
C123	TOILET	PRT1	CTB1	PT1	PT1	CT1.2.3 / PT1	PT1	ACT2	9
C124	CLERICAL	CPT1.2.3	RB2	PT1.2	PT1	PT1	PT1	ACT1 / PT4	19.21
C125	RECEPTION	CPT1.2.3	RB2	PT1	PT1	PT1	PT1	ACT1 / PT4	21
C126	MAIL / WORK RM	VCT1.2.3	RB1	PT1	PT1	PT1	PT1	ACT1	7
C127	LOBBY	VCT1.2.3.4.5	RB1	PT1	PT1	PT1	PT1	ACT1 / PT2.3	
C128	VESTIBULE	EM1	RB1	PT1	PT1	PT1	PT1	ACT1 / PT2	
C129	TEACHER DINING	VCT1.2.3	RB1	PT1	PT1	PT4	PT1	ACT2	7
C130	CAFE DINING	RA1.2	RB1	PT1	PT1	PT1	PT1	ACT1/ PT3.4.5	14
C131	KITCHEN	QT1	QTB1	PT1	PT1	PT1	PT1	ACT2	
C132	W.I. COOLER	QT1	--	--	--	--	--	--	
C133	W.I. FREEZER	QT1	--	--	--	--	--	--	
C134	DISH WASH	QT1	QTB1	PT1	PT1	PT1	PT1	ACT2	
C135	DRY STORAGE	QT1	QTB1	PT1	PT1	PT1	PT1	ACT2	
C136	TOILET	QT1	CTB1	CT1	CT1	CT1	CT1	ACT2	
C137	LOCKERS	QT1	QTB1	PT1	PT1	PT1	PT1	ACT2	
C138	RECEIVING	QT1	QTB1	PT1	PT1	PT1	PT1	ACT2	
C139	OFFICE	QT1	QTB1	PT1	PT1	PT1	PT1	ACT2	
C140	CAN WASH	CONC	QTB1	PT1	PT1	PT1	PT1	PT6	
C141	CUSTO/ LAUNDRY	QT1	QTB1	PT1	PT1	PT1	PT1	ACT2	
C142	ELEC	CONC1	RB1	PT1	PT1	PT1	PT1	PT6	

FINISH SCHEDULE

ROOM NUMBER	ROOM NAME	FLOOR	WALL BASE	WALLS N	WALLS S	WALLS E	WALLS W	CEILING	NOTES
C143	MECH	CONC1	RB1	PT1	PT1	PT1	PT1	PT6	
C144	EXT PE STORAGE	CONC1	RB1	PT1	PT1	PT1	PT1	PT6	
C145	TABLE/ CHAIR STORAGE	CONC1	RB1	PT1	PT1	PT1	PT1	ACT1	
C146	SHOWER/ TOILET	PRT1	CTB1 / PRTB1	PT1	CT1.2.3 / PT1	PT1	PT1	ACT2 / PT6	1.9
C147	PE OFFICE	RA1	RB1	PT1	PT1	PT1	PT1	ACT1	
C148	PE STORAGE	CONC1	RB1	PT1	PT1	PT1	PT1	ACT1	
C149	GYM	RA1.2	RB1	PT1	PT1	PT1	PT1	PREFINISHED / PT2.3.4	5.6
C150	STAIR	RA1.2/ WD1	RB1 / WDB1	PT1	PT1	PT1	PT1	ACT1	8
C151	STORAGE	CONC1	RB1	PT1	PT1	PT1	PT1	ACT1	
C152	STAGE	WD1	WDB1	PT1	PT1	PT1	PT1	PREFINISHED / PT4.7	
C153	PROP STORAGE	CONC1	RB1	PT1	PT1	PT1	PT1	ACT1	
C154	PARENT VOL	VCT1.2.3	RB1	PT2	PT1	PT1	PT1	ACT1	
C155	FAM TOILET	PRT1	CTB1	PT1	PT1	PT1	CT1.2.3 / PT1	ACT2	9
C156	CUST	CONC1	RB1	PT1	PT1	PT1	PT1	PT6	
C158	CUST STOR	VCT1	RB1	PT1	PT1	PT1	PT1	PT6	
C160	IDF	VCT1	RB1	PT1	PT1	PT1	PT1	ACT1	
C161	ELEC CLOSET	CONC1	RB1	PT1	PT1	PT1	PT1	PT6	
C162	RAMP	RAF1	RB1	PT1	PT1	PT1	PT1	ACT1	
C163	COURTYARD	--	--	--	--	--	--	--	
A201	SP ED	VCT1.2.3	RB1	PT1	PT1	PT3	PT1	ACT1	3
A202	TOILET	SV1	SVB1	PT1	PT1	PT1	PT1	ACT2	
A203	STAIR 1	VCT1.2.3 / CONC	RB1	PT1	PT1	PT1	PT1	ACT1 / PT3	2
A204	2ND GRADE	VCT1.2.3	RB1	PT1	PT1	PT1	PT3	ACT1	3
A205	PROJECT	VCT1.2.3	RB1	PT1	PT4	PT1	PT1	ACT1	
A206	2ND GRADE	VCT1.2.3	RB1	PT1	PT1	PT3	PT1	ACT1	3
A207	3RD GRADE	VCT1.2.3	RB1	PT1	PT1	PT1	PT3	ACT1	3
A208	CORRIDOR	VCT1.2.3.4.5	RB1	PT1	PT1	PT1	PT1	ACT1 / PT3	10
A209	PROJECT	VCT1.2.3	RB1	PT1	PT4	PT1	PT1	ACT1	
A210	3RD GRADE	VCT1.2.3	RB1	PT1	PT1	PT3	PT1	ACT1	3
A211	BOYS	PRT1	CTB1	PT1	PT1	CT1.2.3 / PT1	CT1.2.3 / PT1	ACT2	9
A212	GIRLS	PRT1	CTB1	PT1	PT1	CT1.2.3 / PT1	CT1.2.3 / PT1	ACT2	9
A213	TEACHER WORK	VCT1.2.3	RB1	PT1	PT1	PT1	PT3	ACT1	7
A214	COMMONS	VCT1.2.3.4.5	RB1	PT1	PT1	PT3	PT1	ACT1 / PT2	18
A215	TOILET	PRT1	CTB1	PT1	PT1	PT1	CT1.2.3 / PT1	ACT2	9
A216	CUST	CONC1	RB1	PT1	PT1	PT1	PT1	PT6	
A217	ELEV	VCT1	--	--	--	--	--	--	
A218	ELEC	CONC1	RB1	PT1	PT1	PT1	PT1	PT6	
A219	EXPLORATORY/ MULTI-PURPOSE	VCT1.2.3	RB1	PT1	PT1	PT4	PT1	ACT1	
A220	4TH GRADE	VCT1.2.3	RB1	PT1	PT1	PT1	PT4	ACT1	3
A221	PROJECT	VCT1.2.3	RB1	PT1	PT3	PT1	PT1	ACT1	
A222	CORRIDOR	VCT1.2.3.4.5	RB1	PT1	PT1	PT1	PT1	ACT1 / PT4	10
A223	PROJECT ROOM	VCT1.2.3	RB1	PT3	PT1	PT1	PT1	ACT1	
A224	4TH GRADE	VCT1.2.3	RB1	PT1	PT1	PT1	PT4	ACT1	3
A225	STAIR 2	VCT1.2.3.4.5 / RT1 /ST1	RB1	PT1	PT1	PT1	PT1	ACT1 / PT2.4.5.6	2
A226	COMPUTER LAB	VCT1.2.3	RB1	PT1.3	PT1	PT1	PT1	ACT1	
A227	IDF	VCT1	RB1	PT1	PT1	PT1	PT1	ACT1	
A228	3RD GRADE	VCT1.2.3	RB1	PT1	PT1	PT3	PT1	ACT1	3
A229	PROJECT	VCT1.2.3	RB1	PT4	PT1	PT1	PT1	ACT1	
A230	3RD GRADE	VCT1.2.3	RB1	PT1	PT1	PT1	PT3	ACT1	3
A231	RESOURCE	VCT1.2.3	RB1	PT1	PT1	PT1	PT3	ACT1	3
A232	STORAGE	VCT1	RB1	PT1	PT1	PT1	PT1	ACT1	
A233	2ND / 3RD GRADE	VCT1.2.3	RB1	PT1	PT1	PT3	PT1	ACT1	3
A234	2ND GRADE	VCT1.2.3	RB1	PT1	PT1	PT3	PT1	ACT1	3
A235	PROJECT	VCT1.2.3	RB1	PT4	PT1	PT1	PT1	ACT1	
A236	2ND GRADE	VCT1.2.3	RB1	PT1	PT1	PT1	PT3	ACT1	3
A237	STOR	VCT1	RB1	PT1	PT1	PT1	PT1	ACT1	
A238	PREP	VCT1	RB1	PT1	PT1	PT1	PT1	ACT1	
B201	4TH GRADE	VCT1.2.3	RB1	PT1	PT1	PT4	PT1	ACT1	3
B202	SP ED	VCT1.2.3	RB1	PT1	PT1	PT1	PT4	ACT1	3
B203	TOILET	SV1	SVB1	PT1	PT1	PT1	PT1	ACT2	
B204	5TH GRADE	VCT1.2.3	RB1	PT1	PT1	PT1	PT4	ACT1	3
B205	PROJECT	VCT1.2.3	RB1	PT1	PT3	PT1	PT1	ACT1	
B206	5TH GRADE	VCT1.2.3	RB1	PT1	PT1	PT4	PT1	ACT1	3
B207	COMMONS	VCT1.2.3.4.5	RB1	PT1	PT1	PT4	PT1	ACT1 / PT2.5	12.18
B208	STAIR 3	VCT1.2.3.4.5 / CONC	RB1	PT1	PT1	PT1	PT1	ACT1 / PT4.6	
B209	SCIENCE LAB	VCT1.2.3	RB1	PT4	PT1	PT1	PT1	ACT1	
B210	PREP	VCT1	RB1	PT1	PT1	PT1	PT1	ACT1	
B211	BOYS	PRT1	CTB1	PT1	PT1	CT1.2.3 / PT1	CT1.2.3 / PT1	ACT2	9
B212	5TH GRADE	VCT1.2.3	RB1	PT1	PT1	PT4	PT1	ACT1	3
B213	PROJECT	VCT1.2.3	RB1	PT3	PT1	PT1	PT1	ACT1	
B214	5TH GRADE	VCT1.2.3	RB1	PT1	PT1	PT1	PT4	ACT1	3
B215	IDF	VCT1	RB1	PT1	PT1	PT1	PT1	ACT1	
B216	TOILET	SV1	SVB1	PT1	PT1	PT1	PT1	ACT2	
B217	SP ED	VCT1.2.3	RB1	PT1	PT1	PT1	PT4	ACT1	3
B218	4TH GRADE	VCT1.2.3	RB1	PT1	PT1	PT4	PT1	ACT1	3
B219	GIRLS	PRT1	CTB1	PT1	PT1	CT1.2.3 / PT1	CT1.2.3 / PT1	ACT2	9
B220	CUST	CONC1	RB1	PT1	PT1	PT1	PT1	ACT2	
B221	STORAGE	CONC1	RB1	PT1	PT1	PT1	PT1	ACT1	

GENERAL FINISH NOTES

A. THE FINISH SCHEDULE INDICATES ONLY THE BASIC OR PREDOMINANT SURFACE FINISHES OF EACH SPACE. REFER ALSO TO PLAN KEY NOTES, DETAILS AND SPECIFICATIONS FOR THE FULL RANGE AND EXTENT OF ALL FINISHES REQUIRED TO COMPLETE THE WORK FOR EACH SPACE.

B. ALL INTERIOR SURFACES (EXCEPT PREFINISHED APPLIED MATERIALS) SHALL BE PAINTED PT1, UON.

C. PAINT SOFFITS PT6, UON.

D. FINISH OF PAINT ON WALLS SHOULD BE SEMI-GLOSS ON ALL CMU WALLS AND EGGSHELL ON GWB WALLS AND SOFFITS.

E. SEE REFLECTED CEILING PLANS FOR LOCATION & EXTENT OF DIFFERING MATERIALS.

F. PROVIDE FLOORING TRANSITION STRIPS AND ACCESSORIES TO MATCH RB1.

G. PROVIDE PT4 ON ALL HM FRAMES, DOORS, RAILINGS AND STAIR STRINGERS AND FRAMING.

H. EXPOSED STRUCTURE PAINT DECK, JOISTS AND ALL NON-PREFINISHED ITEM PT2.

I. REFER TO PARTIAL FLOOR PATTERN PLANS FOR ADDITIONAL INFO FOR ACCENT PAINT LOCATIONS.

J. INSTALL ROLLER SHADES (RS1) AT ALL EXTERIOR STORE FRONT WINDOWS EXCEPT CORRIDOR, AND STAIR WINDOWS. REFER TO PLANS AND FRAME ELEVATIONS FOR SIZES AND LOCATIONS.

K. INSTALL RB2 WITH CARPET FLOORING, UNLESS CARPET AND VCT ARE INSTALLED IN SAME ROOM.

L. PROVIDE GR1 WITH PRT1 AND PRTB1 FLOOR TILES.

M. PROVIDE GR2 WITH CT1,2 AND 3 AND CTB1 WALL TILES.

N. PROVIDE GR3 WITH QT1 AND QTB1 IN KITCHEN AND SURROUND AREAS.

O. PROVIDE PLAM2 ON PENCIL SHARPENER BLOCK. REFER TO D4 / A-802.

P. PROVIDE SS2 STOOLS AT ALL WINDOWS IN ADMINISTRATION AREA AND DICOVERY CENTER.

Q. PROVIDE PT4 ON ALL METAL STAIR RISERS, UON.

FINISH SCHEDULE NOTES

1. INSTALL PRT1 AT SHOWER FLOORS AND PRTB1 AT SHOWER BASE. CT1 ON ALL WALLS TO 7'-0" AFF. PT6 ON GWB CEILING.
2. PROVIDE INTEGRAL STAIR TREAD / RISER ST1 ON ALL STAIRS WITH RT1 ON LANDINGS.
3. PROVIDE PLAM1 ON COUNTER TOPS AND BACKSPLASH AND PLAM2 ON BASE AND WALL CABINETS, DRAWERS AND OTHER VERTICAL SURFACES WITH PVC1 AS ALL EDGE BANDING.
4. PROVIDE CC1 AT CURTAIN LOCATIONS INDICATED ON SHEET A-103 & A-402.
5. PAINT TECTUM WALL PANELS PT3,4,5. REFER TO D1, D2 & D5 / A-703 FOR ELEVATIONS, PLACEMENT AND EXTENTS OF PANELS.
6. PAINT EXPOSED CEILING STRUCTURE, MECHANICAL DUCT WORK, CONDUIT, ETC. PT3 COMPLETE.
7. PROVIDE PLAM3 ON COUNTER TOPS AND BACKSPLASH AND PLAM4 ON BASE AND WALL CABINETS, DRAWERS AND OTHER VERTICAL SURFACES WITH PVC2 AS ALL EDGE BANDING.
8. PROVIDE WD1 / WDB1 ON STAIRS AND BASE.
9. INSTALL CT WALL TILE TO 4'-0" AFF WITH PT1 ABOVE AS INDICATED ON ELEVATION E5 & E6 / A-702.
10. PAINT BULKHEADS IN COLOR INDICATED ON RCP COMPLETE.
11. PAINT COLUMNS PT4 COMPLETE AT GWB AND PT2 ON CMU BASE.
12. PAINT COLUMNS PT5 COMPLETE AT GWB AND PT4 ON CMU BASE.
13. PAINT COLUMNS PT5 COMPLETE AT GWB AND PT4 ON CMU BASE WITH PT2 ON REVEAL.
14. REFER TO C1 & C4 / A-703 FOR CAFE DINING ELEVATIONS, PLACEMENT AND EXTENTS OF AWPs.
15. REFER TO C5 & B4 / A-702 FOR MUSIC ROOM ELEVATIONS, PLACEMENT AND EXTENTS OF AWPs.
16. REFER TO B5, A1, A2 & A5 / A-702 FOR DISCOVERY CENTER ELEVATIONS, PLACEMENT AND EXTENTS OF AWPs.
17. REFER TO D4 & C4 / A-702 FOR BAND ROOM ELEVATIONS, PLACEMENT AND EXTENTS OF AWPs.
18. PROVIDE RS1 AT WINDOWS IN THIS ROOM.
19. REFER TO C5, C6, B1, B2 / A-801. FOR CASEWORK ELEVATIONS AND PLAM LOCATIONS.
20. REFER TO D1, D2, D3 / A-801 FOR CASEWORK ELEVATIONS AND PLAM LOCATIONS.
21. PROVIDE 90% OF CPT1, 5% OF CPT2 AND 5% OF CPT3. RANDOMLY DISPERSE CPT2 AND CPT3 EVENLY THOUGHOUT ROOM.

Received by SBBCC 3.2.2015

S.B. Ballard Construction Company

RRMM ARCHITECTS

WALLER TODD & SADLER ARCHITECTS

The Livas Group Architects, P.C.

MARK	DATE	BY	DESCRIPTION

REVISIONS

DATE	03-03-2015
PROJECT	10105.22
DESIGNED	LRS
DRAWN	HJH
CHECKED	DRJ

COMMONWEALTH OF VIRGINIA
C. DUANE M. HARVER
Lic. No. 6310
03/03/15
ARCHITECT

SBBCC PROJECT NUMBER: NFS-2014-317
VIRGINIA DEPARTMENT OF EDUCATION 118-48-00-100

PROJECT
CITY OF NORFOLK AND NORFOLK PUBLIC SCHOOLS
BROAD CREEK IB ELEMENTARY SCHOOL
NORFOLK, VIRGINIA

DRAWING
FINISH SCHEDULE AND NOTES

SHEET
A-701

C:\Users\cgossett\Documents\10105.22 Broad Creek Elem School - Central_cgossett.rvt

3/3/2015 5:40:05 PM

FINISH LEGEND

SYMBOL	PRODUCT	MANUFACTURER	PRODUCT # / STYLE	COLOR	NOTES
FLOOR					
CONC1	SEALED CONCRETE	--	--	CLEAR	--
CPT1	CARPET TILE	INTERFACE	1462102500 PRIMARY STITCH	102422 CABLE/ACCENT (BLUE WITH MULTI COLOR)	19.69" x 19.69" TILES, QUARTER TURN INSTALLATION
CPT2	CARPET	INTERFACE	138570250H MONOCHROME	101828 LEGACY (MEDIUM BLUE)	19.69" x 19.69" TILES, QUARTER TURN INSTALLATION
CPT3	CARPET	INTERFACE	138570250H MONOCHROME	101834 FELT (MEDIUM GRAY)	19.69" x 19.69" TILES, QUARTER TURN INSTALLATION
EM1	ENTRACE MAT	KADEE INDUSTRIES	KDCM	NEAR BLACK (BLACK)	EXTRUDED ALUMINUM FRAME W/ CARPET INSERTS
PRT1	PORCELAIN TILE, FIELD	DALTILE	KEYSTONES	D200 DESERT GRAY SPECKLE (MEDIUM GRAY SPECKLE)	2" x 2" TILES, PRICE GROUP 1
QT1	QUARRY TILE	DALTILE	QUARRY TILE	0Q42 ARID GRAY (MEDIUM GRAY)	6" x 6" TILES, PRICE GROUP 2, 1/2" THICK, 3/8" GROUT JOINT
RA1	RESILIENT ATHLETIC FLOORING	GERFLOR	TARAFLEX REC 30	6047 CLASSIC WOOD	6'-6" W x 82'-0" L ROLLS, 3.0mm THICK
RA2	RESILIENT ATHLETIC FLOORING	GERFLOR	TARAFLEX REC 30	2707 DARK STORM	6'-6" W x 82'-0" L ROLLS, 3.0mm THICK
RT1	RUBBER TILE	JOHNSONITE	RUBBER TILE #CRT	18 NAVY BLUE (DARK BLUE)	CUBIS SURFACE TEXTURE, 24" x 24" TILES
ST1	STAIR TREAD	JOHNSONITE	RUBBER STAIR TREADS #VICUTRS	18 NAVY BLUE (DARK BLUE)	CUBIS CURFACE TEXTURE, W/ INTEGRAL RISER AND 2" W CONTRASTING COLOR GRIT TAPE INSERT
SV1	SHEET VINYL	GERFLOR	TARASAFE SPARCLEAN TREATED ULTRA	8709 GRANITE (MEDIUM GRAY SPECKLE)	2mm THICK, 6'-6"W ROLLS
VCT1	VINYL COMPOSITION TILE, FIELD	ARMSTRONG	STANDARD EXCELON	51811 ANTIQUE WHITE (LIGHT TAN)	12" x 12" TILES, BASKETWEAVE INSTALLATION
VCT2	VINYL COMPOSITION TILE, ACCENT	ARMSTRONG	STANDARD EXCELON	51915 CHARCOAL (DARK GRAY)	12" x 12" TILES, BASKETWEAVE INSTALLATION
VCT3	VINYL COMPOSITION TILE, ACCENT	ARMSTRONG	STANDARD EXCELON	51882 SERENE BLUE (MEDIUM BLUE)	12" x 12" TILES, BASKETWEAVE INSTALLATION
VCT4	VINYL COMPOSITION TILE, ACCENT	ARMSTRONG	STANDARD EXCELON	51946 GENTIAN BLUE (DARK BLUE)	12" x 12" TILES, BASKETWEAVE INSTALLATION
VCT5	VINYL COMPOSITION TILE, ACCENT	ARMSTRONG	STANDARD EXCELON	51805 CAMEL BEIGE (GOLD)	12" x 12" TILES, BASKETWEAVE INSTALLATION
WD1	WOOD FLOORING	--	--	CLEAR FINISH ON MAPLE	USED ON STAGE
BASE					
CTB1	CERAMIC TILE BASE	DALTILE	SEMI-GLOSS	K165 ALMOND (LIGHT TAN)	4" COVE BASE, PRICE GROUP 1
PRTB1	PORCELAIN TILE WALL BASE	DALTILE	KEYSTONES	D200 DESERT GARY SPECKLE (MEDIUM GRAY SPECKLE)	4"H, COVE BASE, PRICE GROUP 1
QTB1	QUARRY TILE BASE	DALTILE	QUARRY TILE	0Q42 ARID GRAY (MEDIUM GRAY)	6" COVE BASE, PRICE GROUP 2
RB1	RESILIENT WALL BASE	JOHNSONITE	TRADITIONAL WALL BASE	18 NAVY BLUE (DARK BLUE)	4"H, COVE BASE
RB2	RESILIENT WALL BASE	JOHNSONITE	TRADITIONAL WALL BASE	18 NAVY BLUE (DARK BLUE)	4"H, TOELESS BASE, USE WITH CARPET ONLY
SVB1	SHEET VINYL BASE	GERFLOR	TARASAFE SPARCLEAN TREATED ULTRA	8709 GRANITE (MEDIUM GRAY SPECKLE)	4"H, INTREGAL SANITARY COVE BASE
WDB1	WOOD BASE	--	--	CLEAR FINISH ON MAPLE	4"H, TOELESS BASE
WALLS					
CT1	CERAMIC TILE, FIELD	DALTILE	SEMI-GLOSS	0135 ALMOND (LIGHT TAN)	4-1/4" x 4-1/4" TILES, PRICE GROUP 1
CT2	CERAMIC TILE, ACCENT	DALTILE	SEMI-GLOSS	0182 SUEDE GRAY (MEDIUM GRAY)	4-1/4" x 4-1/4" TILES, PRICE GROUP 2
CT3	CERAMIC TILE, ACCENT	DALTILE	SEMI-GLOSS	1469 GALAXY (DARK BLUE)	4-1/4" x 4-1/4" TILES, PRICE GROUP 1
PT1	PAINT, OVERALL	SHERWIN WILLIAMS	--	SW7029 AGREEABLE GRAY (LIGHT GRAY)	--
PT2	PAINT, ACCENT	SHERWIN WILLIAMS	--	SW7067 CITYSCAPE (DARK GRAY)	--
PT3	PAINT, ACCENT	SHERWIN WILLIAMS	--	SW6515 LEISURE BLUE (MEDIUM BLUE)	--
PT4	PAINT, ACCENT	SHERWIN WILLIAMS	--	SW6524 COMMODORE (DARK BLUE)	--
PT5	PAINT, ACCENT	SHERWIN WILLIAMS	--	SW6388 GOLDEN FLEECE (GOLD)	--
CEILINGS					
ACT1	ACOUSTICAL CEILING TILE	USG	22421 RADAR EDUCATION	WHITE	24" x 24" x 7/8", SQUARE LAY-IN TILES, DX SUSPENSION SYSTEM
ACT2	ACOUSTICAL CEILING TILE	USG	3260 SHEETROCK LAY IN	WHITE	24" x 24" x 1/2", SQUARE LAY-IN TILES, DX SUSPENSION SYSTEM
PT6	CEILING PAINT	SHERWIN WILLIAMS	--	SW7004 SNOWBOUND (WHITE)	--
PT7	CEILING PAINT	SHERWIN WILLIAMS	--	SW6991 BLACK MAGIC (BLACK)	--
MISCELLANEOUS					
AWP1	ACOUSTICAL WALL PANEL FABRIC	MAHARAM	901420 CRISP BACKED	003 MICA (LIGHT GRAY)	66"W, 100% POLYESTER
AWP2	ACOUSTICAL WALL PANEL FABRIC	MAHARAM	901880 REPLY	006 LAPIS (MEDIUM BLUE)	66"W, 100% POLYESTER
AWP3	ACOUSTICAL WALL PANEL FABRIC	MAHARAM	458640 MESSENGER	063 SQUALL (DARK BLUE)	54"W, 78% PI RECYCLED POLYESTER, 15% POLYESTER, 7% NYLON
CC1	CUBICLE CURTAIN	MAHARAM	SET 511462	001 SEAWALL	72"W
GR1	GROUT	MAPEI	KERAPOXY	93 WARM GRAY (LIGHT GRAY)	USE WITH PRT1 AND PRTB1
GR2	GROUT	MAPEI	KERAPOXY	14 BISCUIT (LIGHT TAN)	USE WITH CT1, 2, 3 AND CTB1
GR3	GROUT	MAPEI	KERAPOXY	27 SILVER	USE WITH QT1 AND QTB1
PLAM1	PLASTIC LAMINATE	WILSONART LAMINATE	--	4746-60 WOOLAMAI BRUSH (MEDIUM BLUE)	--
PLAM2	PLASTIC LAMINATE	PIONITE	SUEDE	PFA39 SINGING THE CHICAGO BLUES (DARK BLUE)	--
PLAM3	PLASTIC LAMINATE	PIONITE	SUEDE	AY110 ORVILE (GOLD)	--
PLAM4	PLASTIC LAMINATE	WILSONART LAMINATE	PREMIUM LAMINATE	4830K-18 SATIN STAINLESS (METALLIC LOOK)	--
PVC1	PVC EDGE BAND	CANPLAST	--	CP1133 TL BRITTANY BLUE (MEDIUM BLUE)	USE WITH PLAM1
PVC2	PVC EDGE BAND	CANPLAST	--	CP1120 TL NAVY BLUE (DARK BLUE)	USE WITH PLAM2
PVC3	PVC EDGE BAND	CANPLAST	--	CP1511 TL DESERT BEIGE (LIGHT BEIGE)	USE WITH PLAM3
PVC4	PVC EDGE BAND	CANPLAST	--	CP1031 TL DOVE GREY (LIGHT GRAY)	USE WITH PLAM4
RS1	ROLLER SHADE	DRAPER	FLEXSHADE PW4400	SHEERWEAVE PW 4400 - GREYSTONE (LIGHT GRAY)	3% OPENNESS, BEAD CHAIN CLUTCH OPERATED FLEXSHADE
SS1	SOLID SURFACE	CORIAN	COLORS OF CORIAN	DOVE (MEDIUM GRAY)	1/2" THICK, PRICE GROUP C
SS2	WINDOW STOOL	CORIAN	COLORS OF CORIAN	DOVE (MEDIUM GRAY)	1/2" THICK WITH 1/4" BEVEL EDGE, PRICE GROUP C
TP1	TOILET PARTITION	SCRANTON PRODUCTS	RESISTALL	GREY (MEDUIUM GRAY)	FLOOR MOUNTED, OVERHEAD BRACED, CLASS B

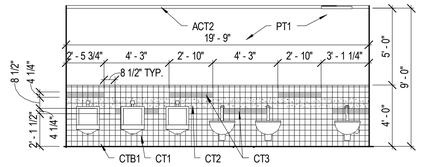

NOTE: TOILET PARTITIONS AND ACCESSORIES NOT SHOWN FOR CLARITY.

E4 / A-702 TYPICAL RESTROOM TILE PATTERN
SCALE: 1/4" = 1'-0"

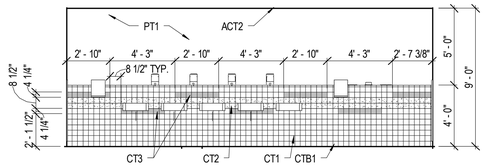

E6 / A-702 TYPICAL RESTROOM TILE PATTERN
SCALE: 1/4" = 1'-0"

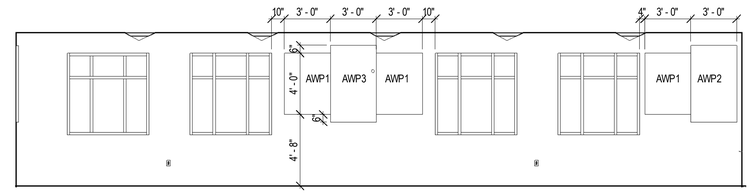

D4 / A-702 BAND INTERIOR NORTH
SCALE: 1/4" = 1'-0"

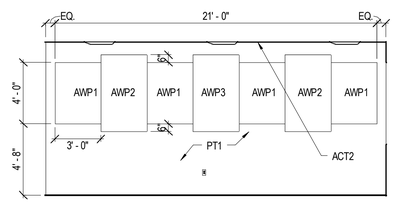

C4 / A-702 BAND INTERIOR WEST
SCALE: 1/4" = 1'-0"

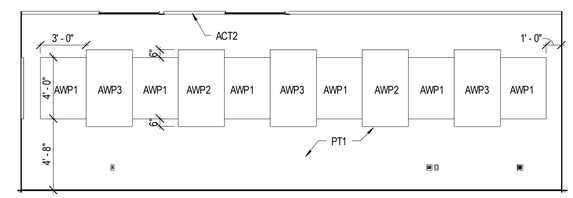

C5 / A-702 MUSIC INTERIOR WEST
SCALE: 1/4" = 1'-0"

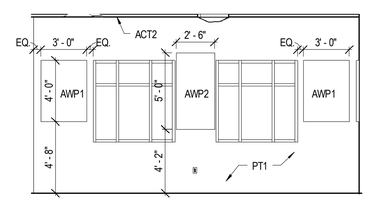

B4 / A-702 MUSIC INTERIOR SOUTH
SCALE: 1/4" = 1'-0"

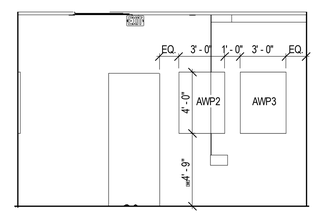

B5 / A-702 DISCOVERY CENTER INTERIOR WEST
SCALE: 1/4" = 1'-0"

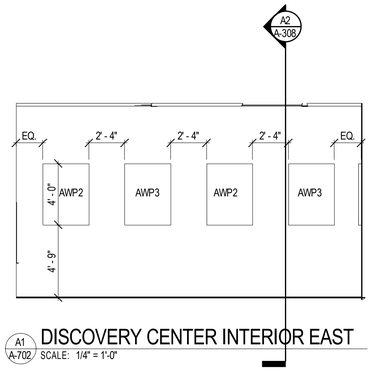

A1 / A-702 DISCOVERY CENTER INTERIOR EAST
SCALE: 1/4" = 1'-0"

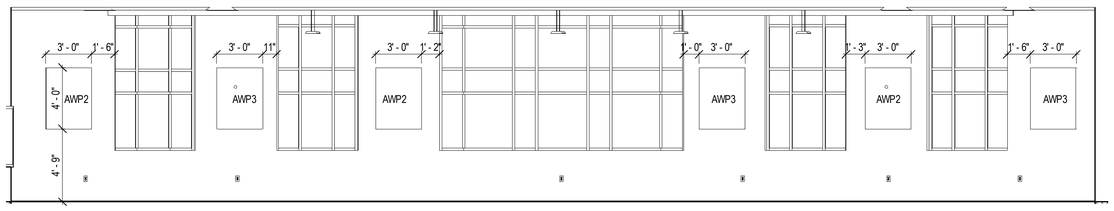

A2 / A-702 DISCOVERY CENTER INTERIOR SOUTH
SCALE: 1/4" = 1'-0"

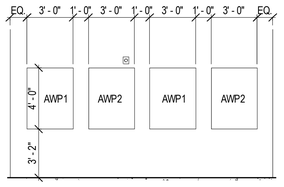

A5 / A-702 DISCOVERY CENTER INTERIOR NORTH
SCALE: 1/4" = 1'-0"

Received by SBBCC 3.2.2015

S.B. Ballard Construction Company

RRMM ARCHITECTS

WALLER TODD & SADLER ARCHITECTS

The Livas Group Architects, P.C.

MARK	DATE	REVISIONS	BY	DESCRIPTION

DATE	03-03-2015
PROJECT	10105.22
DESIGNED	LRS
DRAWN	HJH
CHECKED	DRJ

COMMONWEALTH OF VIRGINIA
DUANE M. HARVER
Lic. No. 6310
03/03/15
ARCHITECT

PROJECT
CITY OF NORFOLK AND NORFOLK PUBLIC SCHOOLS
BROAD CREEK IB ELEMENTARY SCHOOL
NORFOLK, VIRGINIA

SBBCC PROJECT NUMBER: NPS-2014-317
VIRGINIA DEPARTMENT OF EDUCATION: 118-46-00-100

DRAWING
FINISH LEGEND AND INTERIOR ELEVATIONS

SHEET
A-702

C:\Users\rgossett\Documents\10105-22 Broad Creek Elem School - Central_rgossett.rvt
3/3/2015 5:40:22 PM

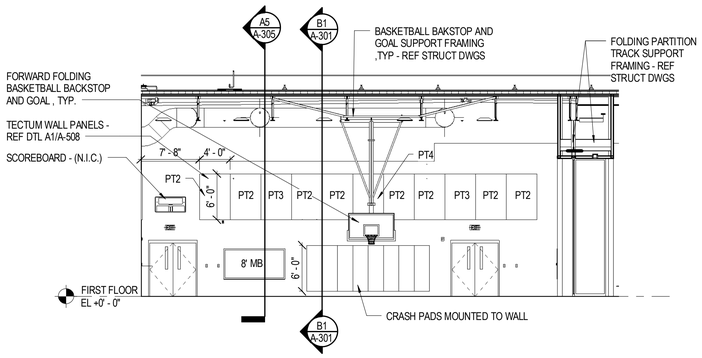

D1 A-703 GYM INTERIOR EAST
SCALE: 1/8" = 1'-0"

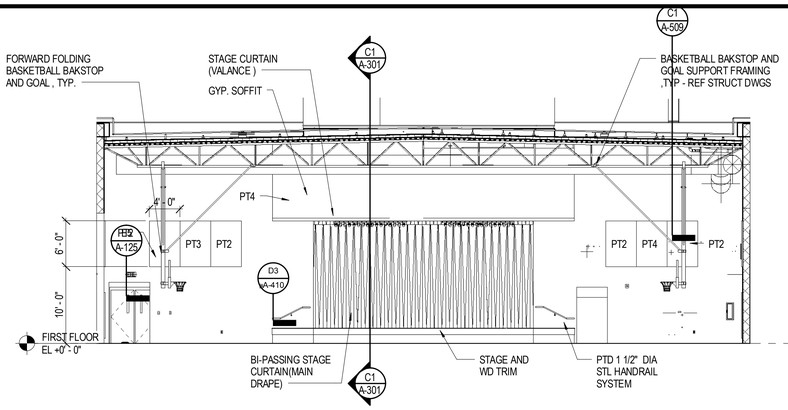

D2 A-703 GYM INTERIOR NORTH
SCALE: 1/8" = 1'-0"

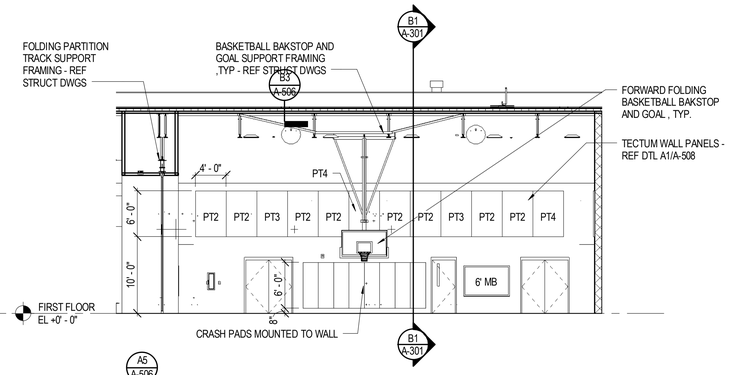

D5 A-703 GYM INTERIOR WEST
SCALE: 1/8" = 1'-0"

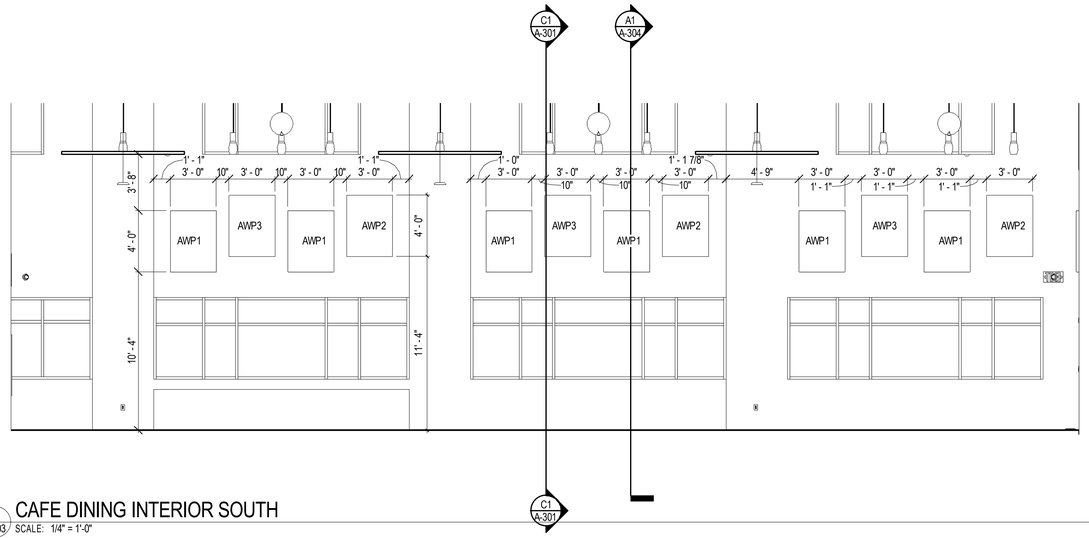

C1 A-703 CAFE DINING INTERIOR SOUTH
SCALE: 1/4" = 1'-0"

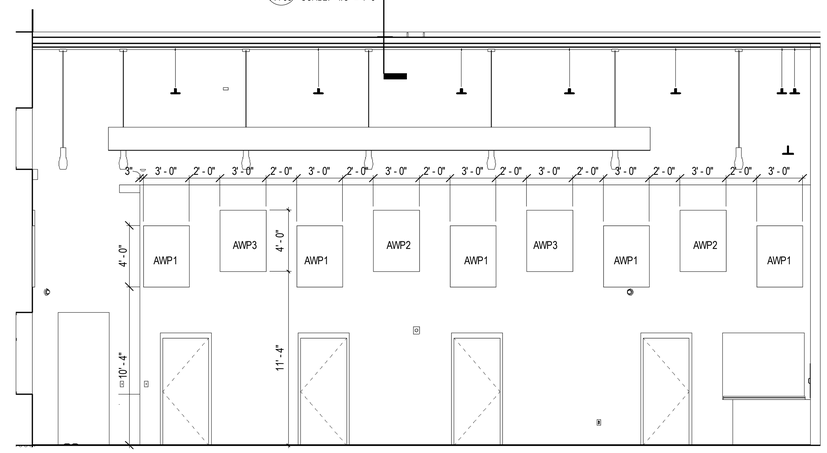

C4 A-703 CAFE DINING INTERIOR WEST
SCALE: 1/4" = 1'-0"

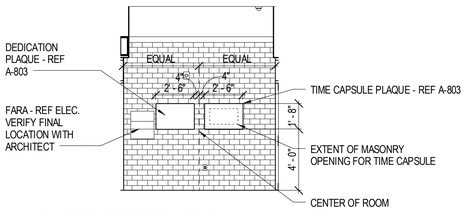

B1 A-703 INTERIOR ELEVATION
SCALE: 1/4" = 1'-0"

Received by SBBCC 3.2.2015

S.B. Ballard Construction Company

RRMM ARCHITECTS

WALLER TODD & SADLER ARCHITECTS

The Livas Group Architects, P.C.

MARK	DATE	DESCRIPTION

REVISIONS

DATE	03-03-2015
PROJECT	10105.22
DESIGNED	LRS
DRAWN	HJH
CHECKED	DRJ

COMMONWEALTH OF VIRGINIA
DUANE M. HARVER
Lic. No. 6310
03/03/15
ARCHITECT

PROJECT
CITY OF NORFOLK AND NORFOLK PUBLIC SCHOOLS
BROAD CREEK IB ELEMENTARY SCHOOL
NORFOLK, VIRGINIA

SBBCC PROJECT NUMBER: NPS-2014-317
VIRGINIA DEPARTMENT OF EDUCATION: 118-46-00-100

DRAWING
INTERIOR ELEVATIONS

SHEET
A-703

C:\Users\rgossett\Documents\10105-22 Broad Creek Elem School - Central_cgossett.rvt
3/3/2015 5:40:38 PM

NOT USED

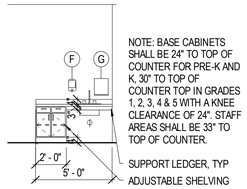

E1 A-801 TYPICAL CLASSROOM CUBBIES-NOT USED
SCALE: 1/4" = 1'-0"

E2 A-801 TYPICAL CLASSROOM SINK
SCALE: 1/4" = 1'-0"

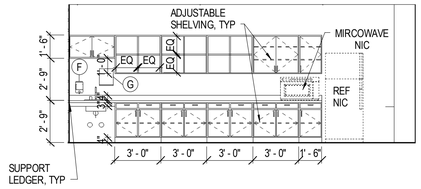

E3 A-801 TEACHER WORKROOM
SCALE: 1/4" = 1'-0"

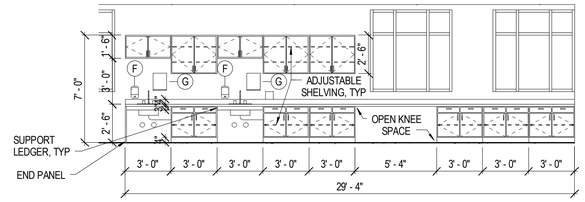

E4 A-801 ART ROOM CASEWORK
SCALE: 1/4" = 1'-0"

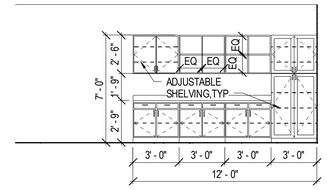

E6 A-801 PARENT RESOURCE ROOM CASEWORK
SCALE: 1/4" = 1'-0"

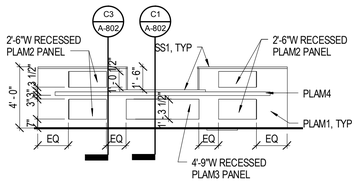

D1 A-801 DISCOVERY CENTER DESK FRONT
SCALE: 1/4" = 1'-0"

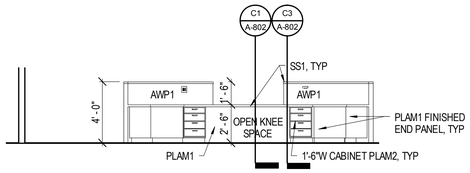

D2 A-801 DISCOVERY CENTER DESK STORAGE 1
SCALE: 1/4" = 1'-0"

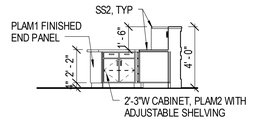

D3 A-801 DISCOVERY CENTER DESK STORAGE 2
SCALE: 1/4" = 1'-0"

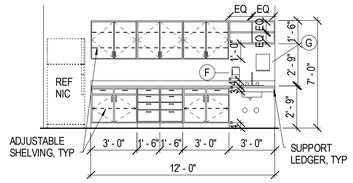

D4 A-801 CLINIC CASEWORK
SCALE: 1/4" = 1'-0"

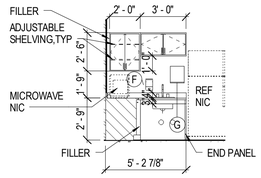

D6 A-801 BREAK ROOM AT SINK
SCALE: 1/4" = 1'-0"

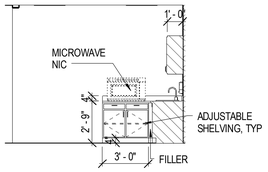

C1 A-801 BREAK ROOM CASEWORK
SCALE: 1/4" = 1'-0"

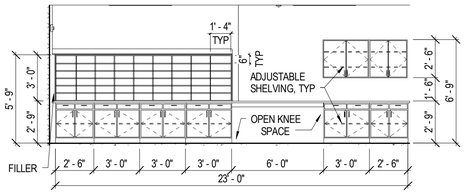

C2 A-801 MAILROOM STORAGE SIDE
SCALE: 1/4" = 1'-0"

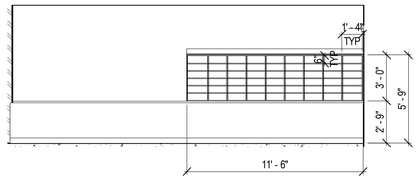

C3 A-801 MAILROOM
SCALE: 1/4" = 1'-0"

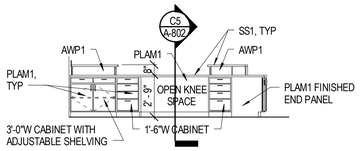

C5 A-801 ADMIN DESK STORAGE ELEVATION 1
SCALE: 1/4" = 1'-0"

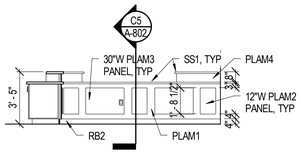

C6 A-801 ADMIN DESK FACE ELEVATION 1
SCALE: 1/4" = 1'-0"

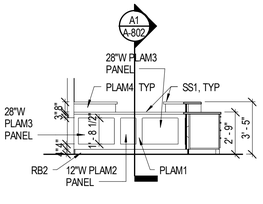

B1 A-801 ADMIN DESK FACE ELEVATION 2
SCALE: 1/4" = 1'-0"

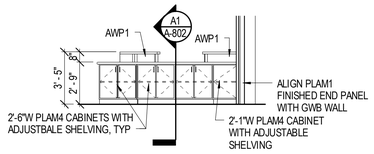

B2 A-801 ADMIN DESK STORAGE ELEVATION 2
SCALE: 1/4" = 1'-0"

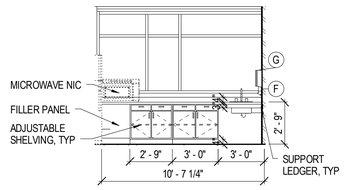

B3 A-801 TEACHER DINING
SCALE: 1/4" = 1'-0"

NOT USED

B4 A-801 TYPICAL PROJECT ROOM - NOT USED
SCALE: 1/4" = 1'-0"

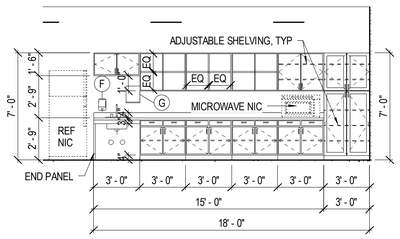

B5 A-801 TEACHER WORKROOM
SCALE: 1/4" = 1'-0"

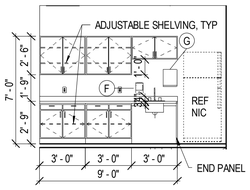

A1 A-801 EXPLORATORY PREP
SCALE: 1/4" = 1'-0"

NOT USED

A2 A-801 EXPLORATORY
SCALE: 1/4" = 1'-0"

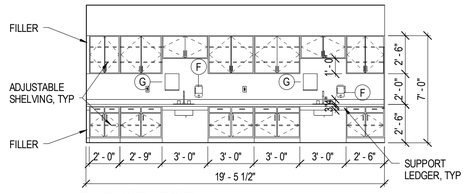

A4 A-801 EXPLORATORY
SCALE: 1/4" = 1'-0"

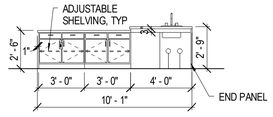

A5 A-801 EXPLORATORY ISLAND
SCALE: 1/4" = 1'-0"

Received by SBBCC 3.2.2015

S.B. Ballard Construction Company
RRMM ARCHITECTS
WALLER TODD & SADLER ARCHITECTS
The Livas Group Architects, P.C.

MARK	DATE	BY	DESCRIPTION
REVISIONS			

DATE	03-03-2015
PROJECT	10105.22
DESIGNED	LRS
DRAWN	HJH
CHECKED	DRJ

COMMONWEALTH OF VIRGINIA
C. DUANE M. HARVER
Lic. No. 6310
03/03/15
ARCHITECT

SBBCC PROJECT NUMBER: NFS-2014-317
VIRGINIA DEPARTMENT OF EDUCATION: 118-48-00-100

PROJECT
CITY OF NORFOLK AND NORFOLK PUBLIC SCHOOLS
BROAD CREEK IB ELEMENTARY SCHOOL
NORFOLK, VIRGINIA

DRAWING
CASEWORK ELEVATIONS

SHEET
A-801

C:\Users\rgossett\Documents\10105-22 Broad Creek Elem School - Central_rgossett.rvt
3/3/2015 5:41:07 PM

NOT USED

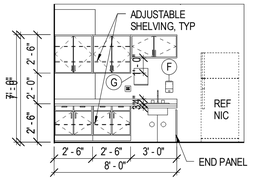

E1 A-802 SCIENCE PREP
SCALE: 1/4" = 1'-0"

E2 A-802 SCIENCE PREP
SCALE: 1/4" = 1'-0"

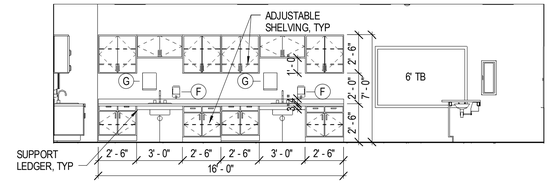

E3 A-802 SCIENCE CASEWORK
SCALE: 1/4" = 1'-0"

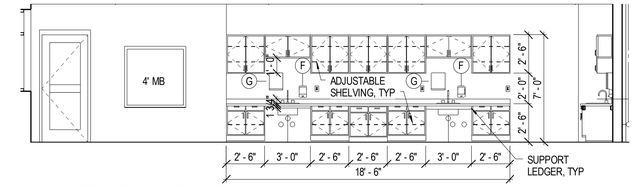

E5 A-802 SCIENCE CASEWORK
SCALE: 1/4" = 1'-0"

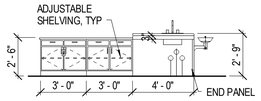

D1 A-802 SCIENCE ISLAND
SCALE: 1/4" = 1'-0"

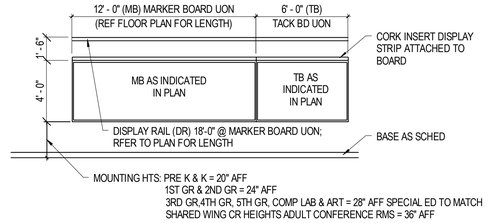

D2 A-802 TYP VISUAL DISPLAY BOARDS
SCALE: 1/4" = 1'-0"

NOTE: PROVIDE ONE PER CLASSROOM AND ALL OTHER EDUCATIONAL SPACES.

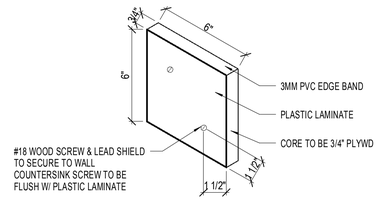

D4 A-802 PENCIL SHARPENER DETAIL
SCALE: 3" = 1'-0"

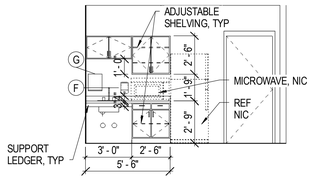

D5 A-802 MEDIA CENTER WORKROOM
SCALE: 1/4" = 1'-0"

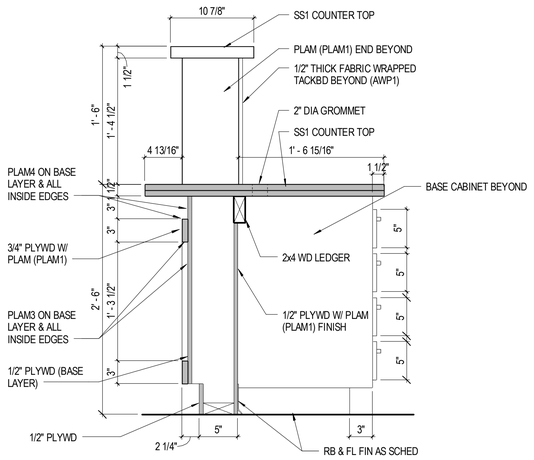

C1 A-802 Media Center Desk Section 1
SCALE: 1 1/2" = 1'-0"

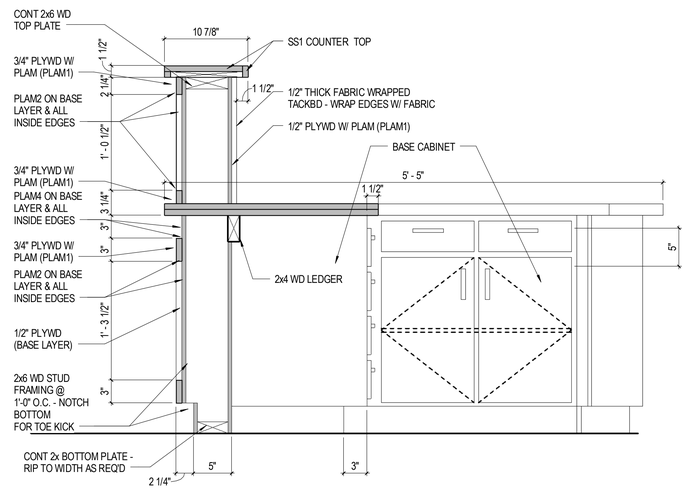

C3 A-802 Media Center Desk Section 2
SCALE: 1 1/2" = 1'-0"

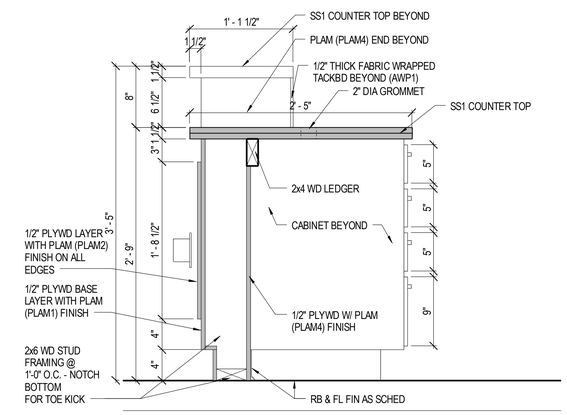

C5 A-802 ADMIN DESK SECTION 1
SCALE: 1 1/2" = 1'-0"

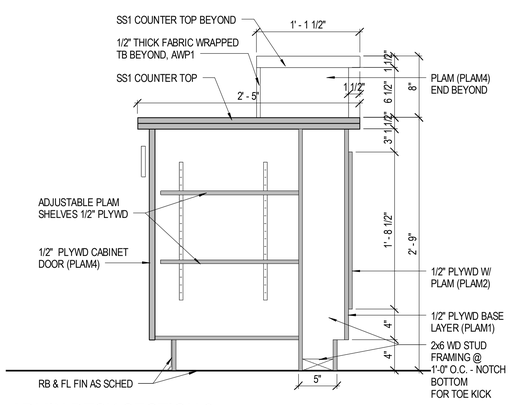

A1 A-802 ADMIN DESK SECTION 2
SCALE: 1 1/2" = 1'-0"

Received by SBBCC 3.2.2015

S.B. Ballard Construction Company
RRMM ARCHITECTS
WALLER TODD & SADLER ARCHITECTS
The Livas Group Architects, P.C.

MARK	DATE	BY	DESCRIPTION
REVISIONS			

DATE	03-03-2015
PROJECT	10105.22
DESIGNED	LRS
DRAWN	HJH
CHECKED	DRJ

COMMONWEALTH OF VIRGINIA
C. DUANE M. HARVER
Lic. No. 6310
03/03/15
ARCHITECT

SBBCC PROJECT NUMBER: NPS-2014-317
VIRGINIA DEPARTMENT OF EDUCATION 118-48-00-100

PROJECT
CITY OF NORFOLK AND NORFOLK PUBLIC SCHOOLS
BROAD CREEK IB ELEMENTARY SCHOOL
NORFOLK, VIRGINIA

DRAWING
CASEWORK ELEVATIONS & DETAILS

SHEET
A-802

C:\Users\cgossett\Documents\10105-22 Broad Creek Elem School - Central_cgossett.rvt
3/3/2015 5:41:21 PM

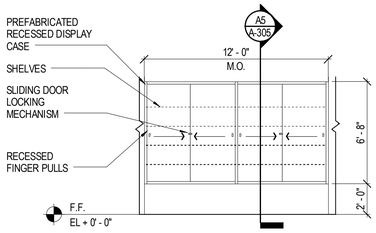

E1 A-803 DISPLAY CASE @ C127
SCALE: 1/4" = 1'-0"

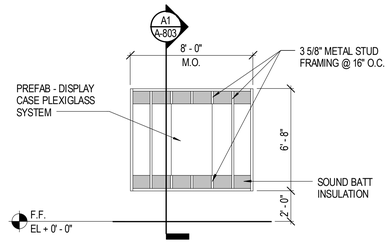

E2 A-803 DISPLAY CASE @ C125
SCALE: 1/4" = 1'-0"

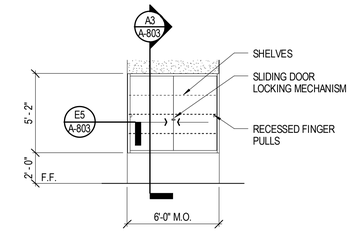

E3 A-803 DISPLAY CASE @ C101
SCALE: 1/4" = 1'-0"

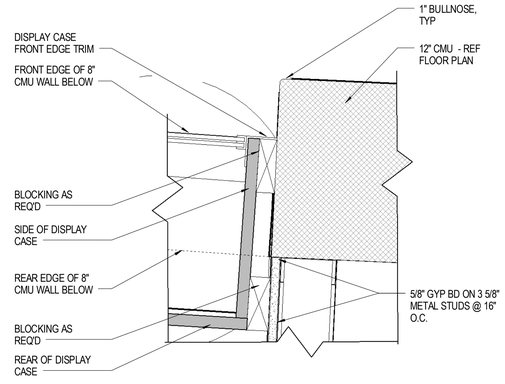

E5 A-803 PLAN DETAIL
SCALE: 3" = 1'-0"

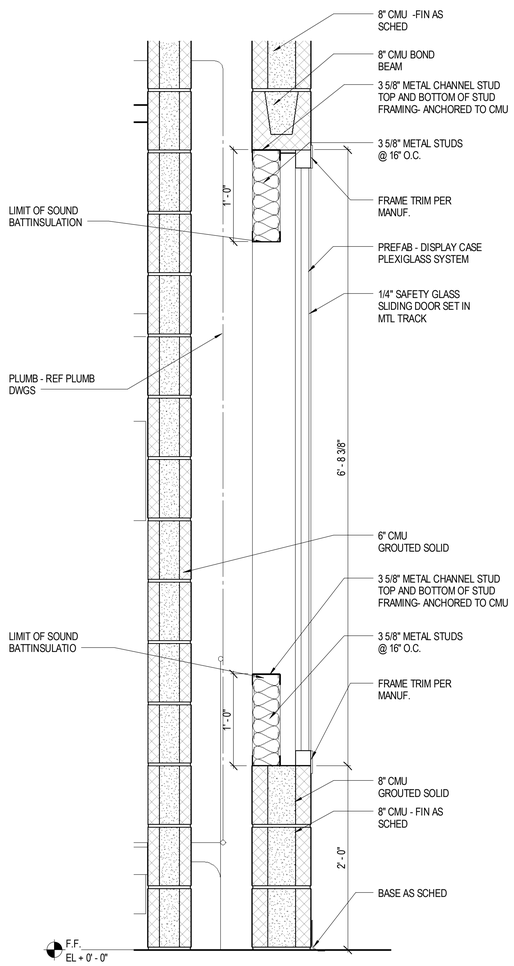

A1 A-803 SECTION
SCALE: 1 1/2" = 1'-0"

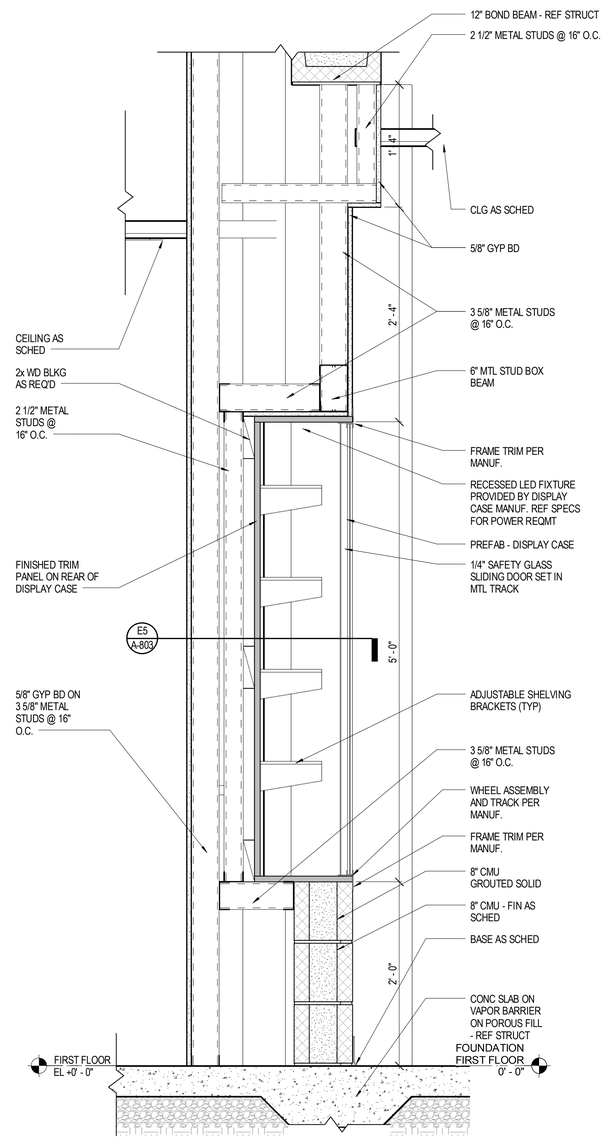

A3 A-803 MEDIA CENTER
SCALE: 1 1/2" = 1'-0"

TIME CAPSULE PLAQUE: TIME CAPSULE 2'-6"W x 1'-8"H CAST ALUM PLAQUE READING "TIME CAPSULE 2013-2038". TIME CAPSULE SHALL HAVE EXPOSED SCREWS TO FACILITATE OPENING THE TIME CAPSULE AT THE APPROPRIATE TIME.

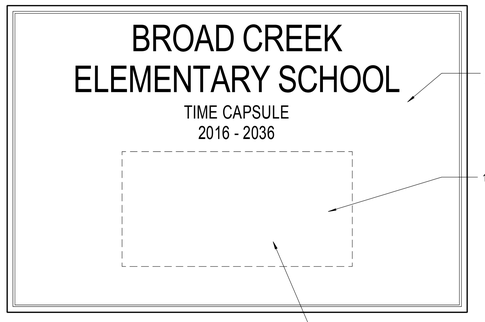

NOTES:
1. VERIFY ALL PLAQUE COPY WITH OWNER AND ARCHITECT PRIOR TO FABRICATION.

DEDICATION PLAQUE: NEW BUILDING CAST ALUM DEDICATION PLAQUE 2'-6"W x 1'-8"H READING AS FOLLOWS:

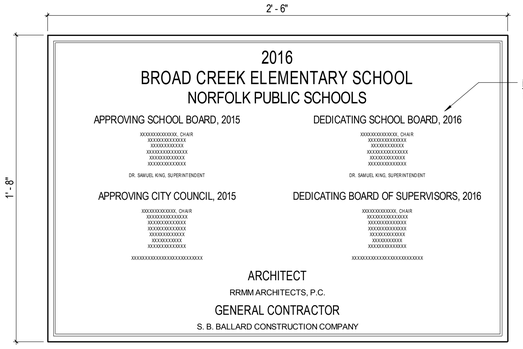

NOTES:
1. VERIFY ALL PLAQUE COPY WITH OWNER AND ARCHITECT PRIOR TO FABRICATION.

A5 A-803 CAST ALUMINUM PLAQUE ELEVATIONS
SCALE: 3" = 1'-0"

Received by SBBCC 3.2.2015

S.B. Ballard Construction Company

RRMM ARCHITECTS

WALLER TODD & SADLER ARCHITECTS

The Livas Group Architects, P.C.

MARK	DATE	BY	DESCRIPTION
REVISIONS			

DATE	03-03-2015
PROJECT	10105.22
DESIGNED	LRS
DRAWN	HJH
CHECKED	DRJ

COMMONWEALTH OF VIRGINIA
C. DUANE M. HARVER
Lic. No. 6310
03/03/15
ARCHITECT

PROJECT
CITY OF NORFOLK AND NORFOLK PUBLIC SCHOOLS
BROAD CREEK IB ELEMENTARY SCHOOL
NORFOLK, VIRGINIA

SBBCC PROJECT NUMBER: NFS-2014-317
VIRGINIA DEPARTMENT OF EDUCATION: 118-46-00-100

DRAWING
DISPLAY CASE ELEVATIONS AND DETAILS

SHEET
A-803

C:\Users\rgossett\Documents\10105.22 Broad Creek Elem School - Central_rgossett.rvt
3/3/2015 5:41:32 PM

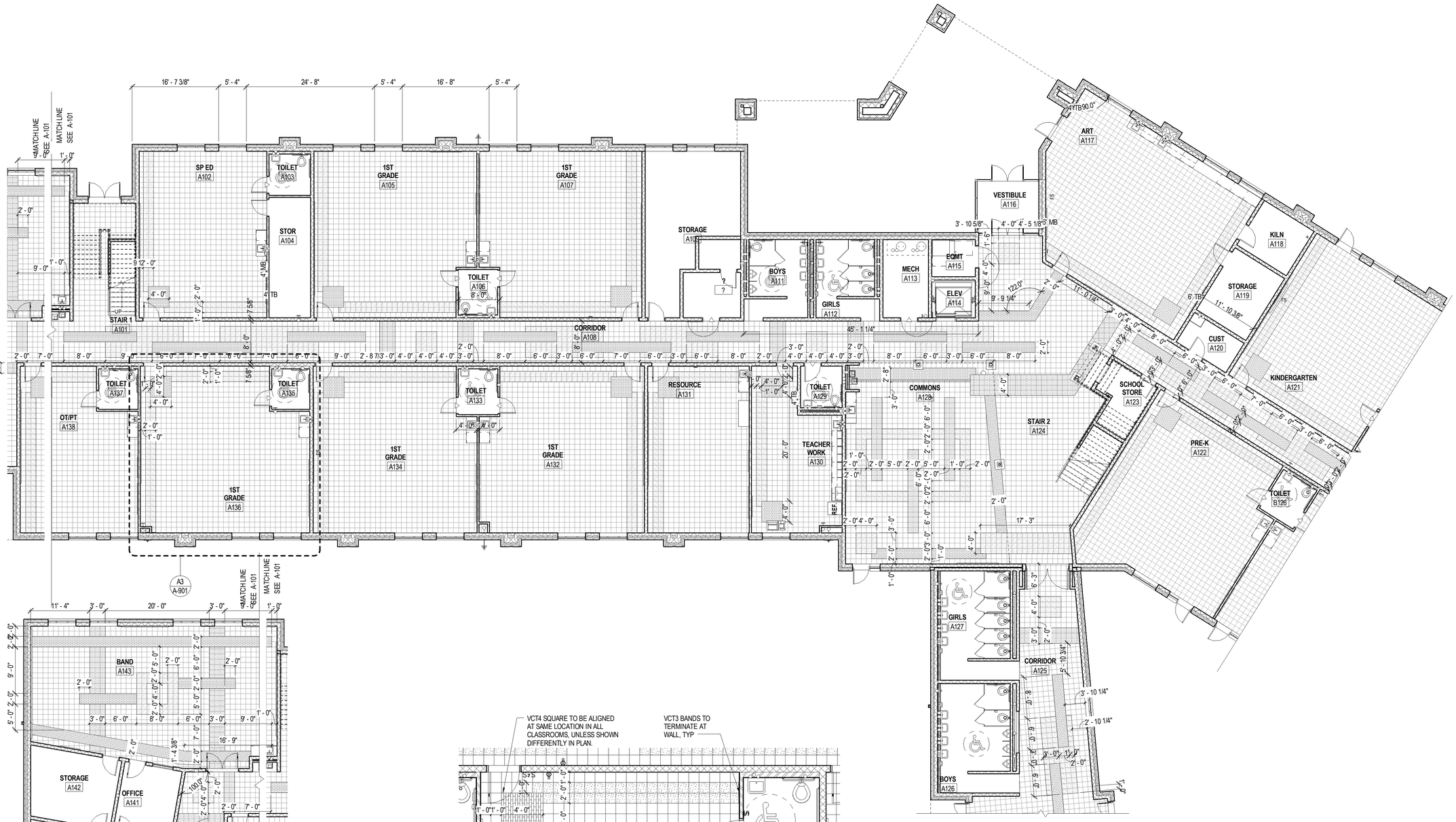

B1 A-901 FLOOR PATTERN PLAN -A1
SCALE: 1/8" = 1'-0"

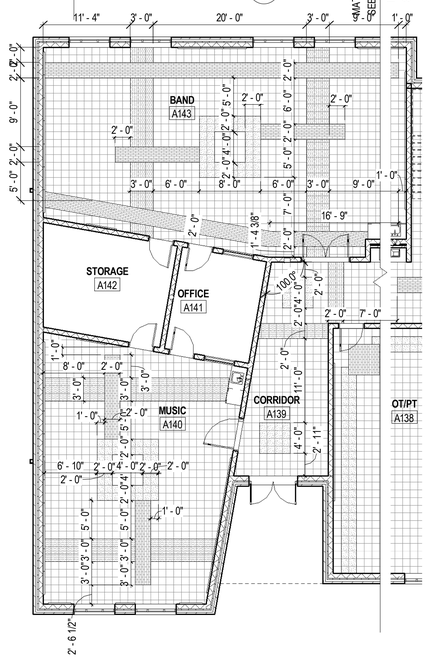

A1 A-901 FLOOR PATTERN PLAN - A1 CONT
SCALE: 1/8" = 1'-0"

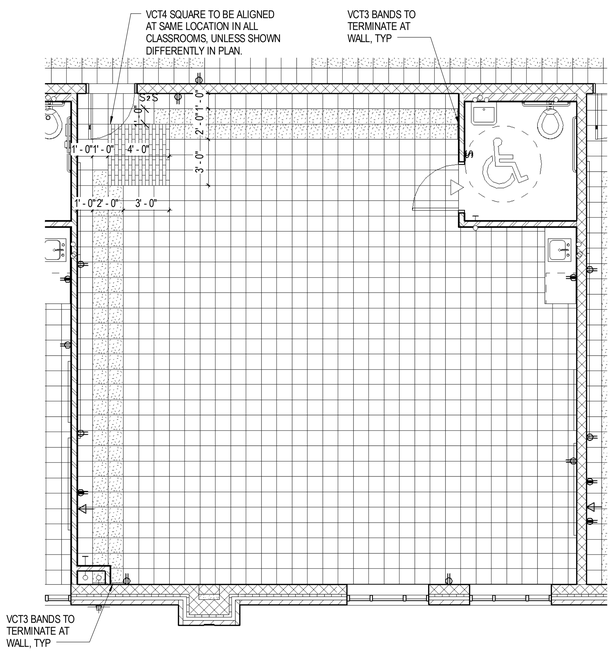

A3 A-901 TYPICAL CLASSROOM FLOOR PATTERN LAYOUT
SCALE: 1/4" = 1'-0"

GENERAL FLOOR PATTERN NOTES

A. FLOOR PATTERNS INDICATED ON THIS SHEET ONLY FOR BUDGET PURPOSES AND PATTERN SELECTION ONLY. ONCE FINAL PATTERN IS SELECTED PATTERNS WILL BE INCLUDED FOR REMAINING AREAS.

B. HATCH PATTERNS REFER TO FLOOR PATTERN SHEETS ONLY.

C. REFER TO FINISH LEGEND FOR ADDITIONAL INFORMATION.

D. HATCH PATTERNS ARE ONLY SHOWN IN SPACES THAT HAVE MULTIPLE FINISHES WHERE EXTENTS OF FINISHES AND TRANSITIONS MUST BE LOCATED.

E. REFER TO A3/A-901 FOR TYPICAL CLASSROOM FLOOR PATTERN LAYOUT AND DIMENSIONS.

FLOOR PATTERN HATCH LEGEND

- VCT1 (LIGHT TAN)
- VCT2 (DARK GRAY)
- VCT3 (MEDIUM BLUE)
- VCT4 (DARK BLUE)
- VCT5 (GOLD)

Received by SBBCC 3.2.2015

S.B. Ballard Construction Company
RRMM ARCHITECTS
WALLER TODD & SADLER ARCHITECTS
The Livas Group Architects, P.C.

MARK	DATE	BY	DESCRIPTION
REVISIONS			

DATE	03-03-2015
PROJECT	10105.22
DESIGNED	LRS
DRAWN	HJH
CHECKED	DRJ

COMMONWEALTH OF VIRGINIA
C. DUANE M. HARVER
Lic. No. 6310
03/03/15
ARCHITECT

PROJECT
CITY OF NORFOLK AND NORFOLK PUBLIC SCHOOLS
BROAD CREEK IB ELEMENTARY SCHOOL
NORFOLK, VIRGINIA
SBBCC PROJECT NUMBER: NPS-2014-317
VIRGINIA DEPARTMENT OF EDUCATION 118-48-00-100

DRAWING
FLOOR PATTERN PLAN - FIRST FLOOR AREA 'A1'

SHEET
A-901

C:\Users\rgossett\Documents\10105.22 Broad Creek Elem School - Central_rgossett.rvt
3/3/2015 5:41:42 PM

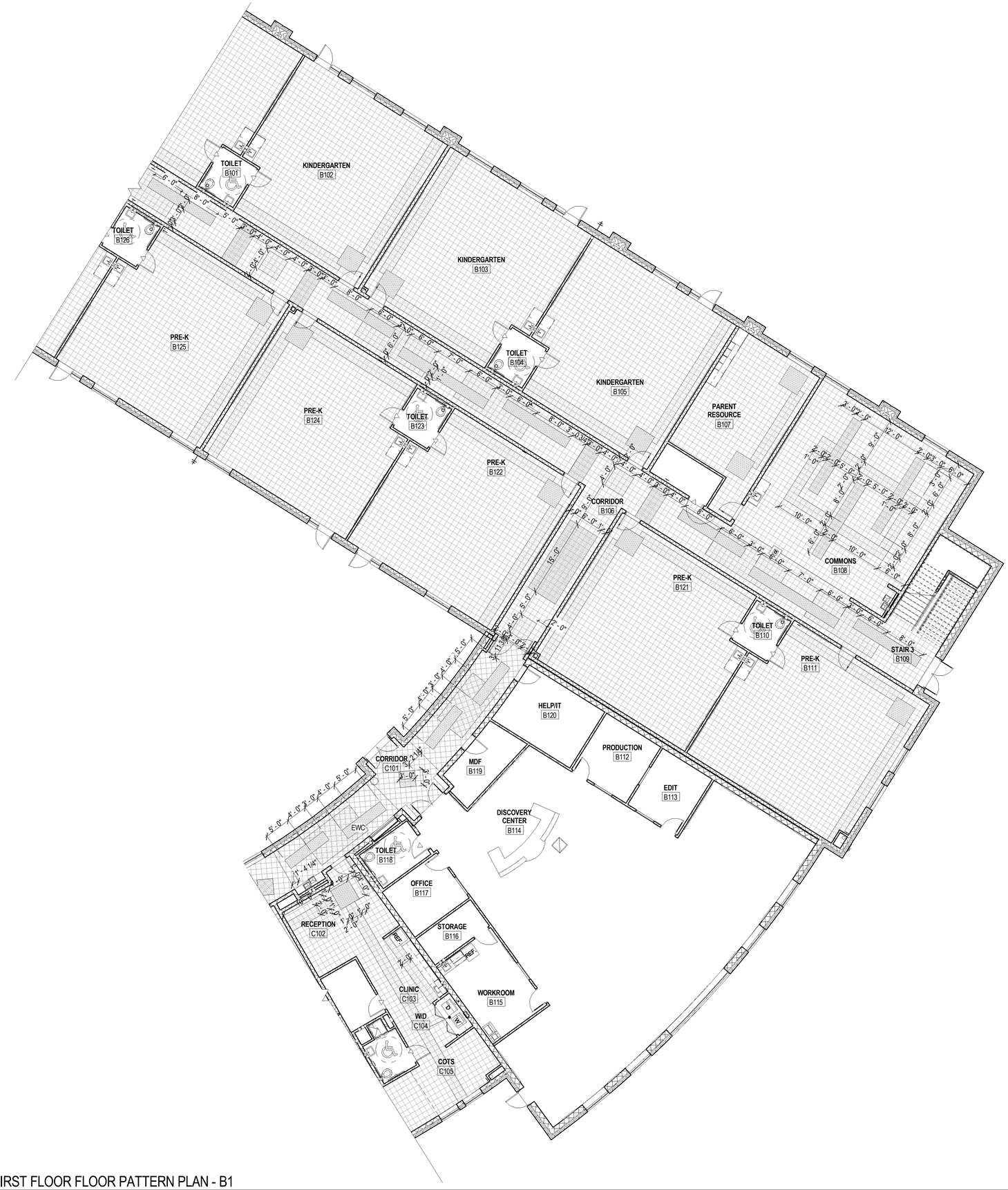

A1
A-902 FIRST FLOOR FLOOR PATTERN PLAN - B1
SCALE: 1/8" = 1'-0"

GENERAL FLOOR PATTERN NOTES

A. FLOOR PATTERNS INDICATED ON THIS SHEET ONLY FOR BUDGET PURPOSES AND PATTERN SELECTION ONLY. ONCE FINAL PATTERN IS SELECTED PATTERNS WILL BE INCLUDED FOR REMAINING AREAS.

B. HATCH PATTERNS REFER TO FLOOR PATTERN SHEETS ONLY.

C. REFER TO FINISH LEGEND FOR ADDITIONAL INFORMATION.

D. HATCH PATTERNS ARE ONLY SHOWN IN SPACES THAT HAVE MULTIPLE FINISHES WHERE EXTENTS OF FINISHES AND TRANSITIONS MUST BE LOCATED.

E. REFER TO A3/A-901 FOR TYPICAL CLASSROOM FLOOR PATTERN LAYOUT AND DIMENSIONS.

FLOOR PATTERN HATCH LEGEND

- VCT1 (LIGHT TAN)
- VCT2 (DARK GRAY)
- VCT3 (MEDIUM BLUE)
- VCT4 (DARK BLUE)
- VCT5 (GOLD)

S.B. Ballard Construction Company

RRMM ARCHITECTS

WALLER TODD & SADLER ARCHITECTS

The Livas Group Architects, P.C.

MARK	DATE	BY	DESCRIPTION

REVISIONS

DATE 03-03-2015
PROJECT 10105.22
DESIGNED LRS
DRAWN HJH
CHECKED DRJ

COMMONWEALTH OF VIRGINIA
C. DUANE M. HARVER
Lic. No. 6310
03/03/15
ARCHITECT

PROJECT
CITY OF NORFOLK AND NORFOLK PUBLIC SCHOOLS
BROAD CREEK IB ELEMENTARY SCHOOL
NORFOLK, VIRGINIA
SBBCC PROJECT NUMBER NPS-2014-317
VIRGINIA DEPARTMENT OF EDUCATION 118-48-00-100

DRAWING
FLOOR PATTERN PLAN - FIRST FLOOR AREA 'B1'

SHEET
A-902

Received by SBBCC 3.2.2015

C:\Users\rgossett\Documents\10105-22 Broad Creek Elem School - Central_rgossett.rvt

3/3/2015 5:41:59 PM

GENERAL FLOOR PATTERN NOTES

A. FLOOR PATTERNS INDICATED ON THIS SHEET ONLY FOR BUDGET PURPOSES AND PATTERN SELECTION ONLY. ONCE FINAL PATTERN IS SELECTED PATTERNS WILL BE INCLUDED FOR REMAINING AREAS.

B. HATCH PATTERNS REFER TO FLOOR PATTERN SHEETS ONLY.

C. REFER TO FINISH LEGEND FOR ADDITIONAL INFORMATION.

D. HATCH PATTERNS ARE ONLY SHOWN IN SPACES THAT HAVE MULTIPLE FINISHES WHERE EXTENTS OF FINISHES AND TRANSITIONS MUST BE LOCATED.

E. REFER TO [illegible] FOR DIVISION BETWEEN FLOOR PATTERN LAYOUT AND

FLOOR PATTERN HATCH LEGEND

- VCT1 (LIGHT TAN)
- VCT2 (DARK GRAY)
- VCT3 (MEDIUM BLUE)
- VCT4 (DARK BLUE)
- VCT5 (GOLD)

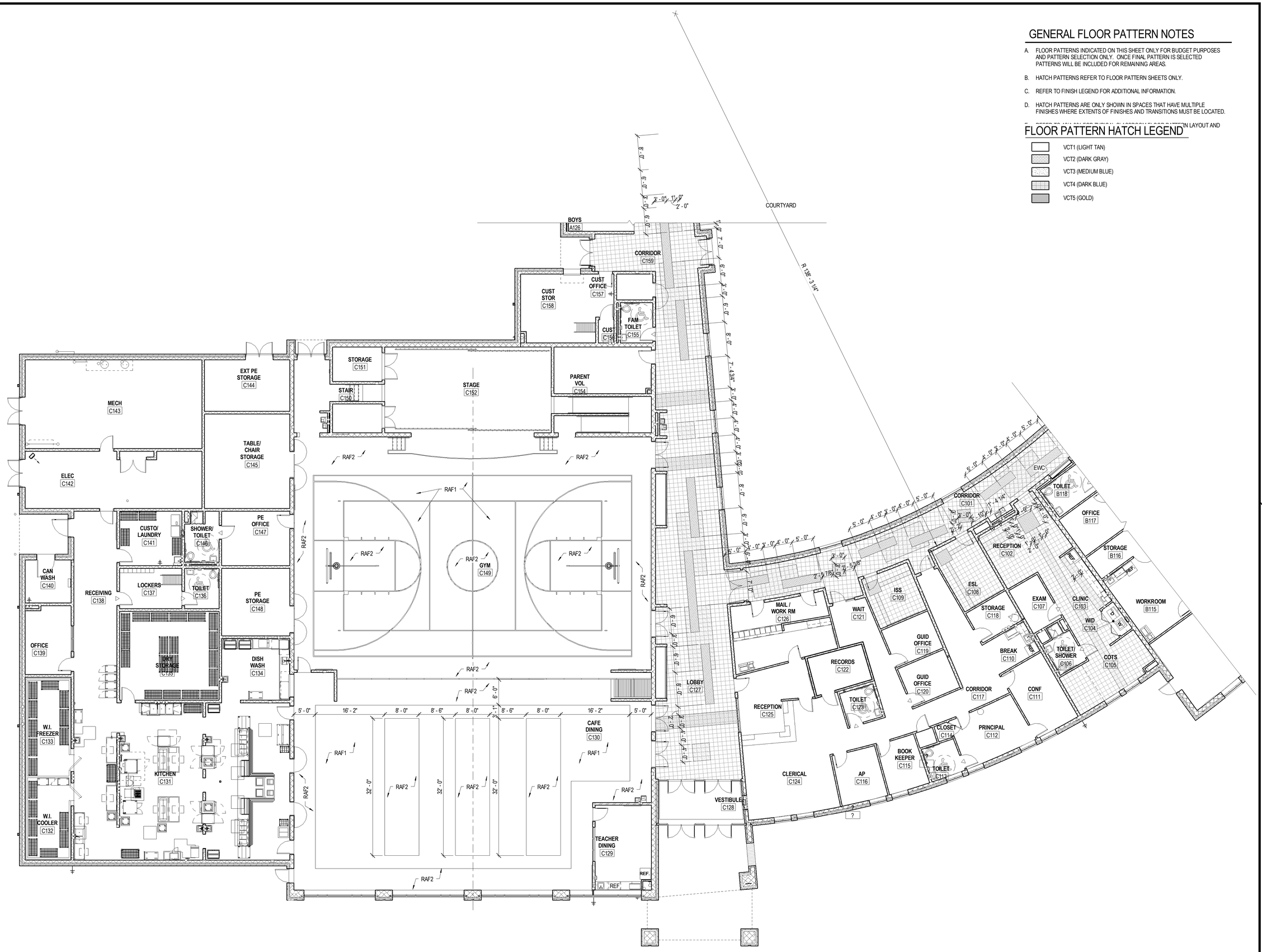

A1 / A-903 FIRST FLOOR FLOOR PATTERN PLAN - C1
SCALE: 1/8" = 1'-0"

Received by SBBCC 3.2.2015

S.B. Ballard Construction Company

RRMM ARCHITECTS

WALLER TODD & SADLER ARCHITECTS

The Livas Group Architects, P.C.

MARK	DATE	BY	DESCRIPTION

REVISIONS

DATE	03-03-2015
PROJECT	10105.22
DESIGNED	LRS
DRAWN	HJH
CHECKED	DRJ

COMMONWEALTH OF VIRGINIA
C. DUANE M. HARVER
Lic. No. 6310
03/03/15
ARCHITECT

PROJECT
CITY OF NORFOLK AND NORFOLK PUBLIC SCHOOLS
BROAD CREEK IB ELEMENTARY SCHOOL
NORFOLK, VIRGINIA

SBBCC PROJECT NUMBER: NPS-2014-317
VIRGINIA DEPARTMENT OF EDUCATION: 118-48-00-100

DRAWING
FLOOR PATTERN PLAN - FIRST FLOOR AREA 'C1'

SHEET
A-903

C:\Users\rgossett\Documents\10105-22 Broad Creek Elem School - Central_rgossett.rvt

3/3/2015 5:42:54 PM

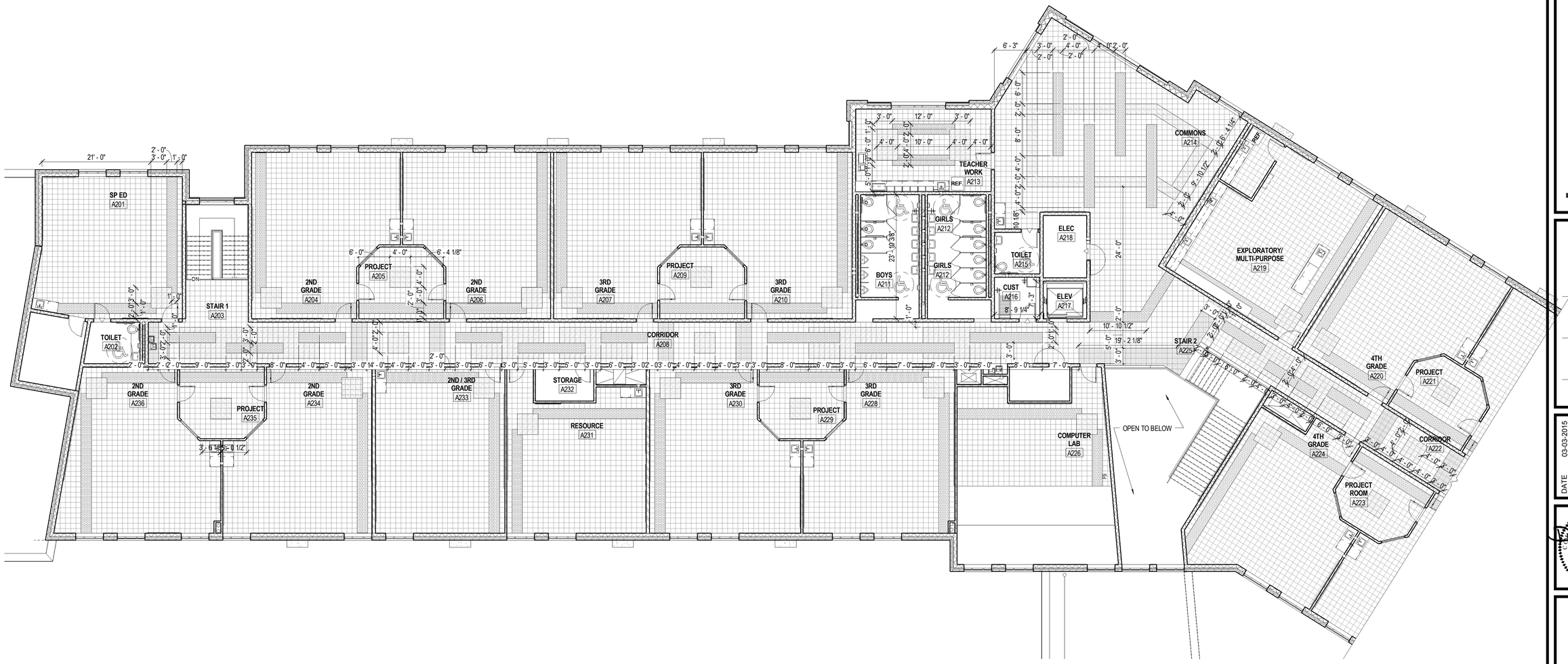

C1 / A-921 SECOND FLOOR FLOOR PATTERN PLAN - A1

SCALE: 1/8" = 1'-0"

GENERAL FLOOR PATTERN NOTES

A. FLOOR PATTERNS INDICATED ON THIS SHEET ONLY FOR BUDGET PURPOSES AND PATTERN SELECTION ONLY. ONCE FINAL PATTERN IS SELECTED PATTERNS WILL BE INCLUDED FOR REMAINING AREAS.

B. HATCH PATTERNS REFER TO FLOOR PATTERN SHEETS ONLY.

C. REFER TO FINISH LEGEND FOR ADDITIONAL INFORMATION.

D. HATCH PATTERNS ARE ONLY SHOWN IN SPACES THAT HAVE MULTIPLE FINISHES WHERE EXTENTS OF FINISHES AND TRANSITIONS MUST BE LOCATED.

E. REFER TO A3/A-901 FOR TYPICAL CLASSROOM FLOOR PATTERN LAYOUT AND DIMENSIONS.

FLOOR PATTERN HATCH LEGEND

- VCT1 (LIGHT TAN)
- VCT2 (DARK GRAY)
- VCT3 (MEDIUM BLUE)
- VCT4 (DARK BLUE)
- VCT5 (GOLD)

Received by SBBCC 3.2.2015

S.B. Ballard Construction Company

RRMM ARCHITECTS

WALLER TODD & SADLER ARCHITECTS

The Livas Group Architects, P.C.

MARK	DATE	BY	DESCRIPTION
REVISIONS			

DATE	03-03-2015
PROJECT	10105.22
DESIGNED	LRS
DRAWN	HJH
CHECKED	DRJ

COMMONWEALTH OF VIRGINIA
C. DUANE M. HARVER
Lic. No. 6310
03/03/15
ARCHITECT

PROJECT: CITY OF NORFOLK AND NORFOLK PUBLIC SCHOOLS
BROAD CREEK IB ELEMENTARY SCHOOL
NORFOLK, VIRGINIA

SBBCC PROJECT NUMBER: NPS-2014-317
VIRGINIA DEPARTMENT OF EDUCATION: 118-48-00-100

DRAWING: FLOOR PATTERN PLAN - SECOND FLOOR AREA 'A2'

SHEET

A-921

C:\Users\rgosset\Documents\10105-22 Broad Creek Elem School - Central_rgosset.rvt

3/3/2015 5:43:25 PM

GENERAL FLOOR PATTERN NOTES

A. FLOOR PATTERNS INDICATED ON THIS SHEET ONLY FOR BUDGET PURPOSES AND PATTERN SELECTION ONLY. ONCE FINAL PATTERN IS SELECTED PATTERNS WILL BE INCLUDED FOR REMAINING AREAS.

B. HATCH PATTERNS REFER TO FLOOR PATTERN SHEETS ONLY.

C. REFER TO FINISH LEGEND FOR ADDITIONAL INFORMATION.

D. HATCH PATTERNS ARE ONLY SHOWN IN SPACES THAT HAVE MULTIPLE FINISHES WHERE EXTENTS OF FINISHES AND TRANSITIONS MUST BE LOCATED.

E. REFER TO A3/A-901 FOR TYPICAL CLASSROOM FLOOR PATTERN LAYOUT AND

FLOOR PATTERN HATCH LEGEND

- VCT1 (LIGHT TAN)
- VCT2 (DARK GRAY)
- VCT3 (MEDIUM BLUE)
- VCT4 (DARK BLUE)
- VCT5 (GOLD)

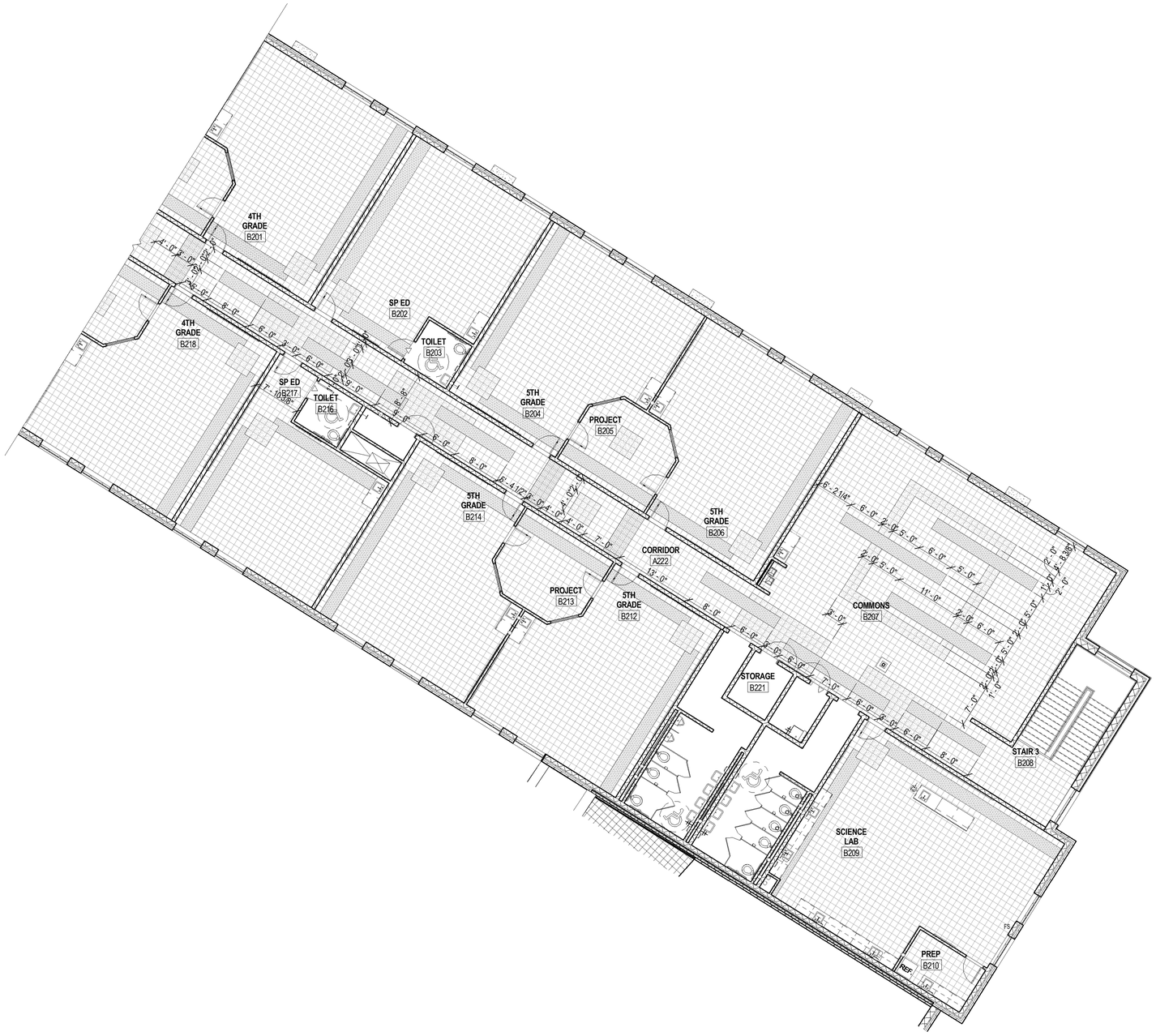

A1 / A-922 SECOND FLOOR FLOOR PATTERN PLAN - B1

SCALE: 1/8" = 1'-0"

Received by SBBCC 3.2.2015

S.B. Ballard Construction Company

RRMM ARCHITECTS

WALLER TODD & SADLER ARCHITECTS

The Livas Group Architects, P.C.

MARK	DATE	BY	DESCRIPTION

REVISIONS

DATE	03-03-2015
PROJECT	10105.22
DESIGNED	LRS
DRAWN	HJH
CHECKED	DRJ

COMMONWEALTH OF VIRGINIA
C. DUANE M. HARVER
Lic. No. 6310
03/03/15
ARCHITECT

PROJECT
CITY OF NORFOLK AND NORFOLK PUBLIC SCHOOLS
BROAD CREEK IB ELEMENTARY SCHOOL
NORFOLK, VIRGINIA

SBBCC PROJECT NUMBER: NPS-2014-317
VIRGINIA DEPARTMENT OF EDUCATION 118-48-00-100

DRAWING
FLOOR PATTERN PLAN - SECOND FLOOR AREA 'B2'

SHEET
A-922

C:\Users\cgossett\Documents\10105-22 Broad Creek Elem School - Central_cgossett.rvt

3/3/2015 5:43:49 PM