APPENDIX E

PRELIMINARY (10% LEVEL) DESIGN PLANS AND SECTIONS

PRETTY LAKE COASTAL FLOODING MITIGATION

CITY OF NORFOLK
DEPARTMENT OF PUBLIC WORKS
ENVIRONMENTAL STORM WATER MANAGEMENT DIVISION

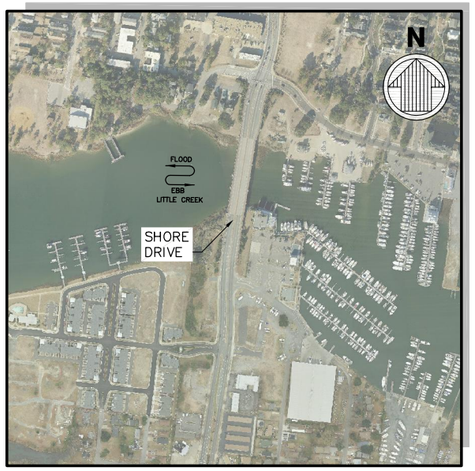

LOCATION MAP
NTS

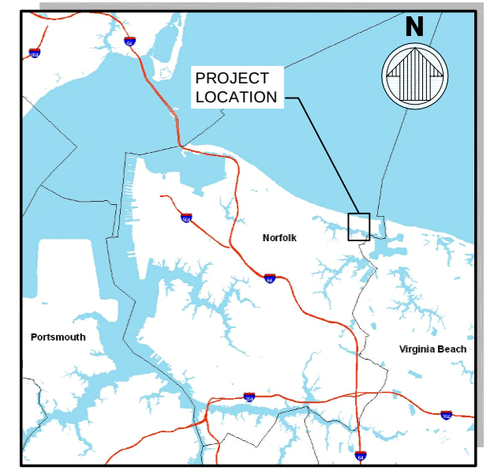

VICINITY MAP
NTS

BEFORE YOU DIG,
CALL
"MISS UTILITY"
OF VIRGINIA
1-800-552-7001
(TOLL FREE)

INDEX OF DRAWINGS

NO.	SHEET	SHEET TITLE
GENERAL		
–	G-001	TITLE SHEET LOCATION MAP & INDEX OF DRAWINGS
–	G-003	ABBREVIATIONS & LEGEND
–	G-101	GENERAL ARRANGEMENT PLAN
–	V-101	EXISTING CONDITIONS PLAN
–	V-102	EXISTING UTILITIES PLAN
GEOTECHNICAL		
–	GR-101	SOIL BORING LOCATION PLAN
STRUCTURAL		
–	S-001	STRUCTURAL NOTES
–	S-101	STRUCTURAL PLAN OF FLOOD WALL
–	S-103	SOUTH-EAST OVERLAND FLOOD WALL – SHEET 1 OF 2
–	S-104	SOUTH-EAST OVERLAND FLOOD WALL – SHEET 2 OF 2
–	S-105	EAST OVERLAND FLOOD WALL – SHEET 1 OF 2
–	S-106	EAST OVERLAND FLOOD WALL – SHEET 2 OF 2
–	S-107	EAST OVERLAND FLOOD WALL PROFILE
–	S-108	SOUTH-EAST OVERLAND
–	S-109	BERM AT PRETTY LAKE AVE.
–	S-201	ELEVATION VIEW OF FLOOD WALL
–	S-401	PARTIAL FLOOD GATE WALL PLAN
–	S-501	FLOOD GATE WALL DETAILS
–	S-502	SHORE DRIVE AND LITTLE CREEK DRIVE OVERLAND FLOOD WALL DETAILS
ELECTRICAL		
–	E-101	ELECTRICAL SITE PLAN
–	E-102	GENERATOR BUILDING ELECTRICAL PLAN
–	E-201	GENERATOR BUILDING ELEVATION
–	E-601	ELECTRICAL SINGLE LINE DIAGRAM

DRAWING SCALES SHOWN BASED ON 22"x34" DRAWING

PRELIMINARY
NOT TO BE USED FOR CONSTRUCTION

Mark	Description	Date	Appr.

PRETTY LAKE COASTAL FLOODING MITIGATION, NORFOLK, VA

TITLE SHEET LOCATION MAP & INDEX OF DRAWINGS

Designed by: BJ
Dwn by: BA
Ckd by: –
Reviewed by: –
Date: MAR, 2012
Rev. –
M&N Project No. 7607-02
Drawing code:
Submitted by: MOFFATT & NICHOL
Drawing Scale: NONE
Plot scale: 1:1 (D SHEET)

moffatt & nichol
800 WORLD TRADE CENTER
NORFOLK, VA 23510
757-628-8222

PREPARED FOR:
CITY OF NORFOLK
DEPARTMENT OF PUBLIC WORKS
ENVIRONMENTAL STORM WATER
MANAGEMENT DIVISION

SEAL

Sheet Reference Number:
G-001
Sheet – of –

File: P:\7607\7607_01-04\500 CADD\520 submittals\7607-02_pretty-lake\submittals\760702-G-001; Plotted: ---- by OWEN, STEPHEN; Saved: 3/22/2012 6:31 PM by BVARTABEDIAN

ABBREVIATIONS

AASHTO = AMERICAN ASSOCIATION OF STATE HIGHWAY AND TRANSPORTATION OFFICIALS
ACI = AMERICAN CONCRETE INSTITUTE
ACQ = ALKALINE COPPER QUATERNARY
ACZA = AMMONIACAL COPPER ZINC ARSENATE
AISC = AMERICAN INSTITUTE OF STEEL CONSTRUCTION
AISI = AMERICAN IRON AND STEEL INSTITUTE
ALT = ALTERNATE
ALUM = ALUMINUM
ANSI = AMERICAN NATIONAL STANDARDS INSTITUTE
APPROX = APPROXIMATE
ASCE = AMERICAN SOCIETY OF CIVIL ENGINEERS
ASTM = AMERICAN SOCIETY FOR TESTING AND MATERIALS
AWG = AMERICAN WIRE GAUGE
AWPA = AMERICAN WOOD PROTECTION ASSOCIATION
AWS = AMERICAN WELDING SOCIETY
BM = BENCHMARK
BOTT = BOTTOM
BTW = BETWEEN
CA-B = COPPER AZOLE TYPE B
CCA = COPPER CHROME ARSENATE
CF = CUBIC FEET
CIP = CAST-IN-PLACE
CJ = CONSTRUCTION JOINT
CKD = CHECKED
CLR = CLEAR
CONC = CONCRETE
CONN = CONNECTION
CONSTR = CONSTRUCTION
CONT = CONTINUOUS
CY = CUBIC YARD
DBL= DOUBLE
DIA = DIAMETER
DIM = DIMENSION
DIP = DUCTILE IRON PIPE
DISCONT = DISCONTINUOUS
DSGN = DESIGNED
DWGS = DRAWINGS
DWN = DRAWN
E = EAST
EA = EACH
EJ = EXPANSION JOINT
EL = ELEVATION
ELEV = ELEVATION
EMBED = EMBEDMENT
EQ = EQUAL
ETC = ET CETERA
EW = EACH WAY
EXIST = EXISTING
EXP = EXPANSION
EXT = EXTENSION
F = FAHRENHEIT
FPS = FEET PER SECOND
FT = FEET
GA = GAUGE
GALV = GALVANIZED
GR = GRADE
HORIZ = HORIZONTAL
HOWL = HIGHEST OBSERVED WATER LEVEL
HSS = HOLLOW STRUCTURAL SECTION
ICC = INTERNATIONAL CODE COUNCIL
ID = IDENTIFICATION
IN = INCHES
INC = INCORPORATED
INFO = INFORMATION
INT = INTERMEDIATE
JT = JOINT
K = KIPS OR 1000 POUNDS
KLF = KIPS PER LINEAR FOOT
KSI = KIPS PER SQUARE INCH
L = ANGLE OR LENGTH
LB = POUND
LF = LINEAR FEET
LG = LONG
LONG. = LONGITUDINAL
LOWL = LOWEST OBSERVED WATER LEVEL
LT = LEFT
MAX = MAXIMUM
MFR = MANUFACTURER
MHHW = MEAN HIGHER HIGH WATER
MHW = MEAN HIGH WATER
MIN = MINIMUM
MISC = MISCELLANEOUS
MLLW = MEAN LOWER LOW WATER
MLW = MEAN LOW WATER
MPH = MILES PER HOUR
MSL = MEAN SEA LEVEL
MTL = MEAN TIDE LEVEL
MUTCD = MANUAL OF UNIFORM TRAFFIC CONTROL DEVICES (2009)
N = NORTH
N/A = NOT APPLICABLE
NAD = NORTH AMERICAN DATUM
NAVD = NORTH AMERCAN VERTICAL DATUM
NGVD = NATIONAL GEODETIC VERTICAL DATUM
NIC = NOT IN CONTRACT
NO. = NUMBER
NOAA = NATIONAL OCEANIC AND ATMOSPHERIC ADMINISTRATION
NOS = NATIONAL OCEAN SERVICE
NTS = NOT TO SCALE
OC = ON CENTER
OSHA = OCCUPATIONAL SAFETY AND HEALTH ADMINISTRATION
P/C = PRECAST
PP = PIPE PILE
P/S = PRESTRESSED
PCF = POUNDS PER CUBIC FOOT
PDA = PILE DYNAMIC ANALYZER
PEN = PENETRATION
PSF = POUNDS PER SQUARE FOOT
PSI = POUNDS PER SQUARE INCH
PVC = POLYVINYLCHLORIDE
QTY = QUANTITY
R = RADIUS
REINF = REINFORCEMENT OR REINFORCED
REQ'D = REQUIRED
REV = REVISION
R/F = REINFORCEMENT OR REINFORCED
RT = RIGHT
S = SOUTH
SCH = SCHEDULE
SF = SQUARE FOOT
SHT = SHEET
SPA = SPACES
SQ = SQUARE
SS = STAINLESS STEEL
STA = STATION
STD = STANDARD
STL = STEEL
SY = SQUARE YARD
T = TON
TEMP = TEMPORARY OR TEMPERATURE
TYP = TYPICAL
UFC = UNIFIED FACILITIES CRITERIA
UON = UNLESS OTHERWISE NOTED
U.S. = UNITED STATES
USGS = UNITED STATES GEOLOGICAL SURVEY
VERT = VERTICAL
VLF = VERTICAL LINEAR FEET
W = WEST
W/ = WITH
WWF = WELDED WIRE FABRIC
" = SECONDS OR INCHES
' = MINUTES OR FEET
* = ASTERISK
# = NUMBER OR POUND
& = AND
@ = AT
℄ = CENTERLINE
℄ = PLATE
ø = DIAMETER
° = DEGREES
± = PLUS OR MINUS
% = PERCENT

LEGEND

SECTION CUT SYMBOL

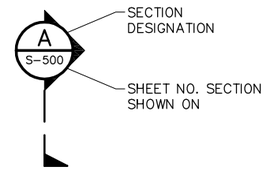

VIEW/ELEVATION SYMBOL

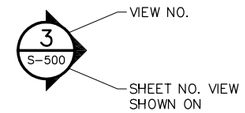

DETAIL CALLOUT SYMBOL

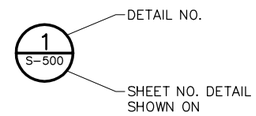

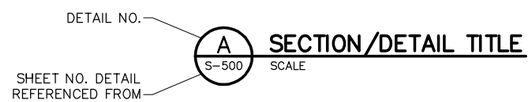

DRAWING SCALES SHOWN BASED ON 22"x34" DRAWING

PRELIMINARY
NOT TO BE USED FOR CONSTRUCTION

Mark	Description	Date	Appr.

PRETTY LAKE COASTAL FLOODING MITIGATION, NORFOLK, VA

ABBREVIATIONS & LEGEND

Designed by: BJ
Dwn by: BA
Ckd by: –
Reviewed by: –
Submitted by: MOFFATT & NICHOL
Date: MAR. 2012
Rev: –
M&N Project No. 7607-02
Drawing code:
Drawing Scale: NONE
Plot scale: 1:1 (0 SHEET)

moffatt & nichol
800 WORLD TRADE CENTER
NORFOLK, VA 23510
757-628-8222

PREPARED FOR:
CITY OF NORFOLK
DEPARTMENT OF PUBLIC WORKS
ENVIRONMENTAL STORM WATER MANAGEMENT DIVISION

SEAL

Sheet Reference Number:
G-003
Sheet – of –

File: P:\7607\7607_01-04\500 CADD\520 submittals\7607-02_pretty-lake\submittals\760702-G-003; Plotted: ---- by OWEN, STEPHEN; Saved: 3/22/2012 6:40 PM by BVARTABEDIAN

N

160' 0' 160' 320'

SCALE: 1"=160'

DRAWING SCALES SHOWN BASED ON 22"x34" DRAWING

CITY OF NORFOLK VIRGINIA · TOWN 1682 · BOROUGH 1705 · CITY 1845

PRELIMINARY
NOT TO BE USED FOR CONSTRUCTION

Mark	Description	Date	Appr.

PRETTY LAKE COASTAL FLOODING MITIGATION, NORFOLK, VA

GENERAL ARRANGEMENT PLAN

Designed by: BJ
Dwn by: BA
Ckd by: –
Reviewed by: –
Submitted by: MOFFATT & NICHOL
Date: MAR. 2012
M&N Project No. 7607-02
Drawing code:
Drawing Scale: NONE
Plot scale: 1:1 (D SHEET)
Rev. –

moffatt & nichol
800 WORLD TRADE CENTER
NORFOLK, VA 23510
757-628-8222

PREPARED FOR:
CITY OF NORFOLK
DEPARTMENT OF PUBLIC WORKS
ENVIRONMENTAL STORM WATER MANAGEMENT DIVISION

SEAL

Sheet Reference Number:
G-101
Sheet – of –

File: P:\7607\7607_01-04\500 CADD\520 submittals\7607-02_pretty-lake\submittals\760702-G-101; Plotted: 3/22/2012 7:13 PM by BVARTABEDIAN
by OWEN, STEPHEN; Saved: 3/22/2012 6:52 PM by BVARTABEDIAN

N

160' 0' 160' 320'

SCALE: 1"=160'

DRAWING SCALES SHOWN BASED ON 22"x34" DRAWING

PRELIMINARY

NOT TO BE USED FOR CONSTRUCTION

Mark	Description	Date	Appr.

PRETTY LAKE COASTAL FLOODING MITIGATION, NORFOLK, VA

EXISTING CONDITIONS PLAN

Designed by: BJJ
Dwn by: BA
Ckd by: –
Reviewed by: –
Date: MAR. 2012
M&N Project No. 7607-02
Rev. –
Drawing code:
Submitted by: MOFFATT & NICHOL
Drawing Scale: NONE
Plot scale: 1:1 (D SHEET)

moffatt & nichol
800 WORLD TRADE CENTER
NORFOLK, VA 23510
757-628-8222

PREPARED FOR:
CITY OF NORFOLK
DEPARTMENT OF PUBLIC WORKS
ENVIRONMENTAL STORM WATER
MANAGEMENT DIVISION

SEAL

Sheet Reference Number:
V-101
Sheet – of –

File: P:\7607\7607_01-04\500 CADD\520 submittals\760702-V-101. Plotted: 3/22/2012 7:14 PM by OWEN, STEPHEN; Saved: 3/22/2012 4:19 PM by BVARTAREDIAN

LEGEND:

- SD — STORM PIPES
- SS — SANITARY SEWER
- W — WATER
- UE — UNDERGROUND ELECTRIC
- OE — OVERHEAD ELECTRIC
- NG — NATURAL GAS

N

160' 0' 160' 320'

SCALE: 1"=160'

DRAWING SCALES SHOWN BASED ON 22"x34" DRAWING

CITY OF NORFOLK · TOWN · 1682 · BOROUGH · 1705 · CITY · 1845

PRELIMINARY

NOT TO BE USED FOR CONSTRUCTION

Mark	Description	Date	Appr.

PRETTY LAKE COASTAL FLOODING MITIGATION, NORFOLK, VA

EXISTING UTILITIES PLAN

Designed by: BJ
Dwn by: BA
Ckd by: –
Reviewed by: –
Submitted by: MOFFATT & NICHOL
Date: MAR, 2012
M&N Project No. 7607–02
Drawing code:
Drawing Scale: NONE
Plot scale: 1:1 (0 SHEET)
Rev. –

moffatt & nichol
800 WORLD TRADE CENTER
NORFOLK, VA 23510
757-628-8222

PREPARED FOR:
CITY OF NORFOLK
DEPARTMENT OF PUBLIC WORKS
ENVIRONMENTAL STORM WATER
MANAGEMENT DIVISION

SEAL

Sheet Reference Number:
V–102
Sheet – of –

File: P:\7607\7607_01–04\500 CADD\520 submittals\7607–02_pretty–lake\submittals\760702–V–102; Plotted: 3/22/2012 7:14 PM by OWEN, STEPHEN; Saved: 3/22/2012 4:20 PM by BVARTABEDIAN

LEGEND:

● BORING LOCATION

NOTE:

1. BORINGS BY VDOT DATED 1999.

N

160' 0' 160' 320'

SCALE: 1"=160'

DRAWING SCALES SHOWN BASED ON 22"x34" DRAWING

PRELIMINARY
NOT TO BE USED FOR CONSTRUCTION

Mark	Description	Date	Appr.

PRETTY LAKE COASTAL FLOODING MITIGATION, NORFOLK, VA

SOIL BORING LOCATION PLAN

Designed by: BJ
Dwn by: BA
Ckd by: –
Reviewed by: –
Submitted by: MOFFATT & NICHOL
Date: MAR, 2012
M&N Project No. 7607–02
Drawing code: –
Drawing Scale: NONE
Plot scale: 1:1 (D SHEET)
Rev. –

moffatt & nichol
800 WORLD TRADE CENTER
NORFOLK, VA 23510
757-628-8222

PREPARED FOR:
CITY OF NORFOLK
DEPARTMENT OF PUBLIC WORKS
ENVIRONMENTAL STORM WATER
MANAGEMENT DIVISION

SEAL

Sheet Reference Number:
GR–101
Sheet – of –

File: P:\7607\7607_01-04\500 CADD\520 submittals\7607-02_pretty-lake\submittals\760702-GR-101; Plotted: 3/22/2012 6:48 PM by OWEN, STEPHEN; Saved: 3/22/2012 4:22 PM by BVARTABEDIAN

CONCRETE AND REINFORCING STEEL:

1. ALL CONCRETE WORK SHALL BE PERFORMED IN ACCORDANCE WITH CURRENT ACI 301, UNLESS OTHERWISE NOTED.
2. ALL CONCRETE SHALL BE NORMAL WEIGHT AND MARINE GRADE, UON.
3. ALL DETAILING, FABRICATION, AND ERECTION OF REINFORCING STEEL SHALL CONFORM TO THE ACI MANUAL OF STANDARD PRACTICE FOR DETAILING REINFORCED CONCRETE STRUCTURES, ACI 315.
4. ALL GROUT IS TO BE NON–METALLIC AND NONSHRINK (UON).
5. MATERIALS SHALL CONFORM TO THE FOLLOWING, UNLESS OTHERWISE NOTED:

   A. CONCRETE STRENGTH

	28 DAY	@ RELEASE
1. CAST–IN–PLACE CONCRETE	5000 PSI	–
2. GROUT	8000 PSI	–
3. PRESTRESSED CONCRETE PILES	6000 PSI	4000 PSI

   B. REINFORCING STEEL

   1. ALL MILD REINFORCING STEEL FOR CAST–IN–PLACE CONCRETE SHALL CONFORM TO ASTM A706 GRADE 60 AND SHALL BE HOT DIP GALVANIZED AFTER FABRICATION.
   2. MILD STEEL SPIRALS SHALL CONFORM TO ASTM A82, GALVANIZED.
   3. GALVANIZED REINFORCING STEEL SHALL COMPLY WITH ASTM A767/A767M, CLASS COATING.
   4. ALL REINFORCING BAR SPLICES SHALL BE CLASS "B" TENSION LAP SPLICES, IN ACCORDANCE WITH ACI 318, CHAPTER 12 (UON).
   5. PRESTRESSING STEEL FOR PRESTRESSED CONCRETE SHALL BE 7–WIRE, LOW RELAXATION STRANDS CONFORMING TO ASTM A416, GRADE 270, UNCOATED.
   6. ALL MECHANICAL COUPLERS, HARDENED NUTS FOR REINFORCING STEEL SHALL DEVELOP 125 PERCENT OF YIELD STRENGTH IN TENSION FOR THE REINFORCING SIZE INDICATED AND SHALL BE COATED IN ACCORDANCE WITH THE SAME REQUIREMENTS AS REINFORCING BARS.

6. CHAMFER ALL EXPOSED EXTERNAL CORNERS OF CONCRETE WITH 3/4", 45° CHAMFERS UNLESS OTHERWISE NOTED.
7. MINIMUM CONCRETE COVER FOR REINFORCING SHALL BE 3" UNLESS OTHERWISE NOTED.
8. ALL HORIZONTAL AND VERTICAL CONSTRUCTION JOINTS SHALL BE KEYED. ROUGHEN SURFACE OF HORIZONTAL CONSTRUCTION JOINTS TO 1/4" AMPLITUDE.

STRUCTURAL AND MISCELLANEOUS STEEL:

1. ALL STEEL WORK SHALL BE PERFORMED IN ACCORDANCE WITH THE CURRENT AISC CODE OF STANDARD PRACTICE FOR STEEL BUILDINGS AND BRIDGES.
2. ALL WELDING SHALL CONFORM TO THE REQUIREMENTS OF CURRENT AWS D1.1
3. STEEL MATERIALS SHALL CONFORM TO THE FOLLOWING, UNLESS OTHERWISE NOTED:

A. STRUCTURAL CARBON STEEL	ASTM A36, A572, UON
B. MISC PLATES, BARS, AND SHAPES	ASTM A36
C. W–SHAPES	ASTM A992
D. STEEL SHEET PILES	ASTM A572, GRADE 50
E. PIPE PILES	ASTM A252, GRADE 3, fy = 50 KSI
F. SHEAR STUDS	AWS D1.1 CLAUSE 7, STUD WELDING

4. ALL STEEL SHAPES, PLATES, FASTENERS AND ALL OTHER STEEL HARDWARE SHALL BE HOT DIP GALVANIZED AFTER ASSEMBLY EXCEPT FOR PIPE PILES, STEEL SHEET PILES, GATE STRUCTURAL AND STAINLESS STEEL SHAPES AND HARDWARE, UNLESS OTHERWISE NOTED.
5. STEEL PIPE PILE COMBINATION WALL SHALL HAVE THE FOLLOWING MINIMUM PROPERTIES:

   - SECTION MODULUS 236.5 IN.^3/FT
   - MOMENT OF INERTIA 6670 IN.^4/FT
   - WALL THICKNESS 3/4" NOMINAL
   - SYSTEM WIDTH 9'–9 5/8"
   - SYSTEM DEPTH 60" (MAXIMUM)
   - YIELD STRENGTH 50 KSI

6. STEEL SHEET PILE CUTOFF WALL SHALL HAVE THE FOLLOWING MINIMUM PROPERTIES:

   - SECTION MODULUS 48.4 IN.^3/FT
   - MOMENT OF INERTIA 437.3 IN.^4/FT
   - WALL THICKNESS 1/2" NOMINAL
   - YIELD STRENGTH 50 KSI

7. STEEL PIPE PILES, PIPE PILE COMBINATION WALL & GATE STRUCTURE SHALL BE COATED WITH 16 MIL COAL TAR EPOXY.
8. STEEL PIPE PILE AND COMBINATION WALL INTERLOCKS/CONNECTORS SHALL BE SEALED.
9. STRUCTURAL CARBON STEEL FASTENERS SHALL CONFORM TO THE REQUIREMENTS OF ASME/ANSI B 18.2.2 AND ASTM A325.
10. ANCHOR BOLTS SHALL CONFORM TO THE REQUIREMENTS OF ASTM F1554 GRADE 105, UNLESS OTHERWISE NOTED.
11. ALL DAMAGED GALVANIZED FINISH SHALL BE FIELD TREATED WITH TWO COATS OF HIGH ZINC OXIDE PAINT, COLD GALVANIZING COMPOUNDS, OR APPROVED EQUAL CONFORMING TO ASTM A780. ALL EXPOSED THREADED SURFACES SHALL BE PAINTED WITH TWO COATS OF HIGH ZINC DUST OXIDE PAINT AFTER INSTALLATION.

INSTALLATION OF MISCELLANEOUS DRILLED DOWEL & ANCHOR BOLTS:

1. DOWEL AND ANCHOR BOLT EMBEDMENT AND HOLE DIAMETER SHALL BE PER MANUFACTURER'S RECOMMENDATIONS TO DEVELOP 150% OF THE DOWEL OR ANCHOR BOLT TENSILE CAPACITY.
2. FOLLOW EPOXY MANUFACTURER'S RECOMMENDATIONS FOR THE INSTALLATION.
3. DRILLED HOLES SHALL HAVE ROUGHENED INTERIOR SURFACE AS PER MANUFACTURER'S RECOMMENDATIONS.
4. CONTRACTOR SHALL LOCATE REINFORCEMENT PRIOR TO DRILLING ANCHOR HOLES, SO AS NOT TO DAMAGE THE REINFORCING STEEL.
5. THE CONTRACTOR SHALL PREPARE A TEMPLATE AND DRILL REQUIRED HOLES.
6. VACCUM DUST FROM BOTTOM AND SIDES OF HOLE USING A NOZZLE OF SMALL TUBING THAT WILL REACH THE BOTTOM OF THE HOLE. INSPECT ALL HOLES WITH A LIGHT TO MAKE CERTAIN ALL DUST IS REMOVED.
7. FOLLOW MANUFACTURER'S RECOMMENDATIONS FOR THE MIXING AND APPLICATION OF EPOXY.
6. SUBMIT MANUFACTURER'S DATA SHEET AND RECOMMENDATIONS FOR APPROVAL
7. THE ANCHOR RODS OR REBARS SHALL DEVELOP THE FOLLOWING MINIMUM ALLOWABLE CAPACITIES. EMBEDMENT DEPTHS SHALL BE AS REQUIRED TO ACHIEVE SPECIFIED CAPACITIES.

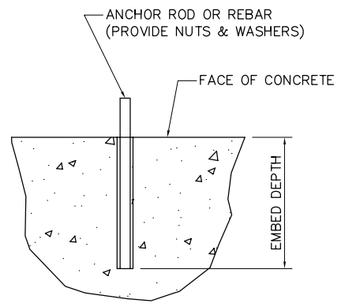

CONCRETE ANCHOR INSTALLATION SCHEDULE *			
ROD DIA (IN)	MIN ALLOWABLE CAPACITY (LBS)	REBAR SIZE NO.	MIN ALLOWABLE CAPACITY (LBS)
3/8"	2500	#4	4600
1/2"	3300	#5	6900
5/8"	7500	#6	11200
3/4"	12900	#7	15400
7/8"	16000	#8	18200
1"	17900	#9	21000
1 1/4"	35200	#10	24200
–	–	#11	30900

* BASED ON f'c = 4000 PSI

REFERENCES

1. ACI 318–08/318R–08 – AMERICAN CONCRETE INSTITUTE "BUILDING CODE REQUIREMENTS FOR REINFORCED CONCRETE AND COMMENTARY"
2. ACI 301 – AMERICAN CONCRETE INSTITUTE "SPECIFICATION FOR STRUCTURAL CONCRETE FOR BUILDINGS"
3. IBC – INTERNATIONAL CODE COUNCIL "INTERNATIONAL BUILDING CODE, 2006 EDITION."
4. ASCE 7–05 – AMERICAN SOCIETY OF CIVIL ENGINEERS, "MINIMUM DESIGN LOADS FOR BUILDINGS AND OTHER STRUCTURES"
5. AISC – AMERICAN INSTITUTE OF STEEL CONSTRUCTION "MANUAL OF STEEL CONSTRUCTION"
6. AASHTO – AMERICAN ASSOCIATION OF STATE HIGHWAY AND TRANSPORTATION OFFICIALS, "STANDARD SPECIFICATION FOR HIGHWAY BRIDGES"
7. UFC 4–152–01 – "DESIGN: PIERS AND WHARVES"
8. UFC 4–159–03 – "DESIGN: MOORINGS"
9. AWS D1.1 – AMERICAN WELDING SOCIETY "STRUCTURAL WELDING CODE–STEEL", 2010 EDITION
10. PCI – PRECAST/ PRESTRESSED CONCRETE INSTITUTE "DESIGN HANDBOOK – 6TH EDITION"

DRAWING SCALES SHOWN BASED ON 22"x34" DRAWING

PRELIMINARY
NOT TO BE USED FOR CONSTRUCTION

Mark	Description	Date	Appr.

PRETTY LAKE COASTAL FLOODING MITIGATION, NORFOLK, VA

STRUCTURAL NOTES

Designed by: –
Dwn by: BA
Ckd by: –
Reviewed by: –
Submitted by: MOFFATT & NICHOL
Date: MAR. 2012
Rev. –
M&N Project No. 7607–02
Drawing code:
Drawing Scale: NONE
Plot scale: 1:1 (0 SHEET)

moffatt & nichol
800 WORLD TRADE CENTER
NORFOLK, VA 23510
757–628–8222

PREPARED FOR:
CITY OF NORFOLK
DEPARTMENT OF PUBLIC WORKS
ENVIRONMENTAL STORM WATER MANAGEMENT DIVISION

SEAL

Sheet Reference Number:
S–001
Sheet – of –

File: P:\7607\7607_01–04\500 CADD\520 submittals\7607–02_pretty–lake\submittals\760702–S–001; Plotted: ---- by OWEN, STEPHEN; Saved: 1/10/2012 2:58 PM by BAYTOOA

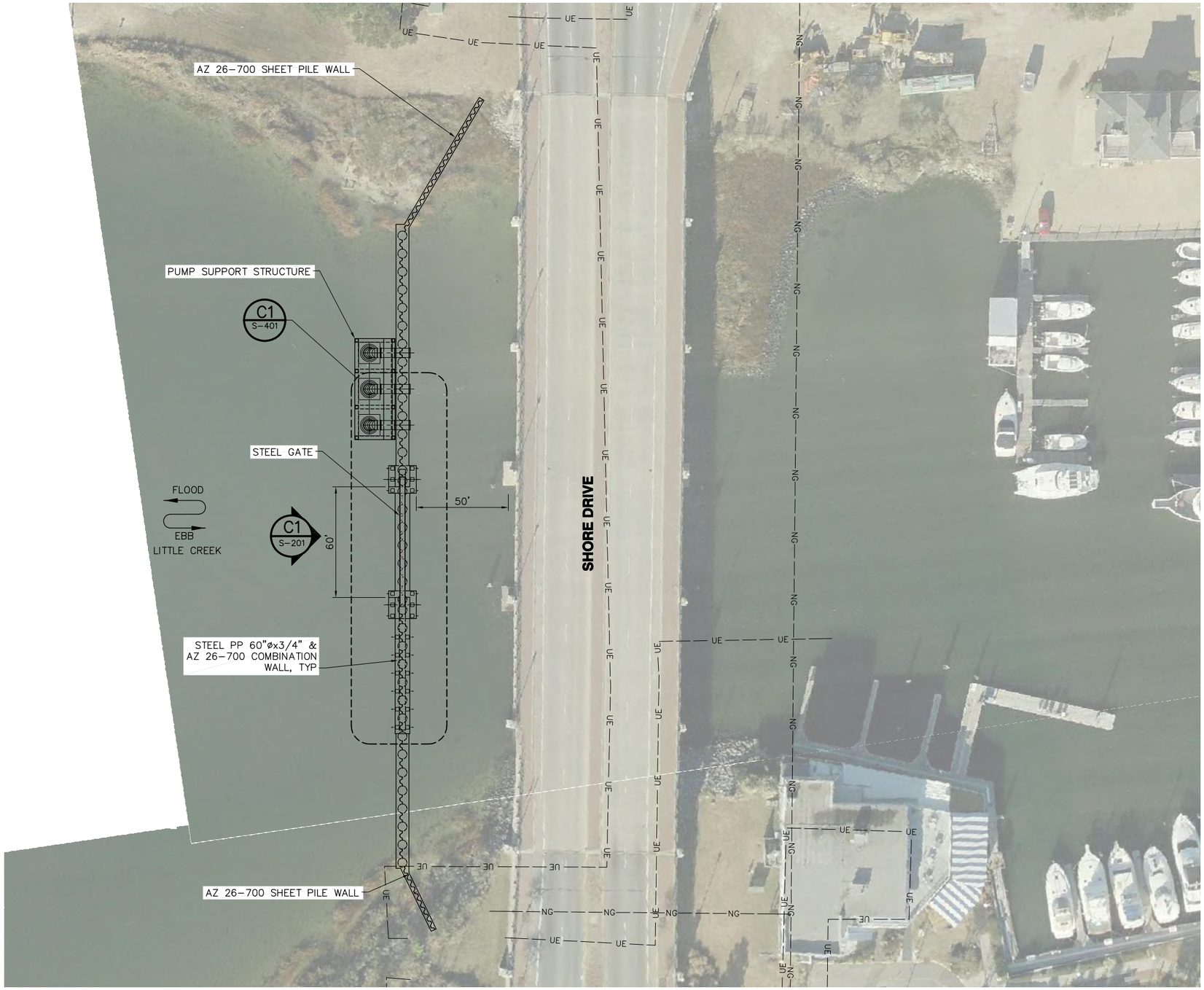

LEGEND:

- OE — OVERHEAD ELECTRIC
- UE — UNDERGROUND ELECTRIC
- NG — NATURAL GAS

N

30' 0' 30' 60'

SCALE: 1"=30'

DRAWING SCALES SHOWN BASED ON 22"x34" DRAWING

PRELIMINARY
NOT TO BE USED FOR CONSTRUCTION

Mark	Description	Date	Appr.

PRETTY LAKE COASTAL FLOODING MITIGATION, NORFOLK, VA

STRUCTURAL PLAN OF FLOOD WALL

Designed by: MR/ JEG
Dwn by: BA
Ckd by: –
Reviewed by: –
Date: MAR, 2012
M&N Project No. 7607-02
Drawing code: –
Submitted by: MOFFATT & NICHOL
Drawing Scale: NONE
Plot scale: 1:1 (D SHEET)
Rev. –

moffatt & nichol
800 WORLD TRADE CENTER
NORFOLK, VA 23510
757-628-8222

PREPARED FOR:
CITY OF NORFOLK
DEPARTMENT OF PUBLIC WORKS
ENVIRONMENTAL STORM WATER
MANAGEMENT DIVISION

SEAL

Sheet Reference Number:
S-101
Sheet – of –

File: P:\7607\7607_01-04\500 CADD\520 submittals\7607-02_pretty-lake\submittals\760702-S-101; Plotted: 3/22/2012 6:51 PM by OWEN, STEPHEN; Saved: 3/21/2012 8:26 AM by BAYTODA

MATCH LINE STA 13+00

MATCH LINE STA 13+00

MATCH LINE STA 6+25

N

30' 0' 30' 60'

SCALE: 1"=30'

DRAWING SCALES SHOWN BASED ON 22"x34" DRAWING

CITY OF NORFOLK · TOWN 1682 · BOROUGH 1705 · CITY 1845

PRELIMINARY
NOT TO BE USED FOR CONSTRUCTION

Mark	Description	Date	Appr.

PRETTY LAKE COASTAL FLOODING MITIGATION, NORFOLK, VA

SOUTH-EAST OVERLAND FLOOD WALL - SHEET 1 OF 2

Designed by: BJ
Dwn by: BA
Ckd by: –
Reviewed by: –
Submitted by: MOFFATT & NICHOL
Date: MAR. 2012
M&N Project No. 7607-02
Drawing code: –
Drawing Scale: NONE
Plot scale: 1:1 (0 SHEET)
Rev: –

moffatt & nichol
800 WORLD TRADE CENTER
NORFOLK, VA 23510
757-628-8222

PREPARED FOR:
CITY OF NORFOLK
DEPARTMENT OF PUBLIC WORKS
ENVIRONMENTAL STORM WATER
MANAGEMENT DIVISION

SEAL

Sheet Reference Number:
S-103
Sheet – of –

File: P:\7607\7607_01-04\500 CADD\520 submittals\760702-S-103; Plotted: 3/22/2012 6:52 PM by OWEN, STEPHEN; Saved: 3/22/2012 6:40 PM by BVARTABEDIAN

N

30' 0' 30' 60'

SCALE: 1"=30'

DRAWING SCALES SHOWN BASED ON 22"x34" DRAWING

PRELIMINARY
NOT TO BE USED FOR CONSTRUCTION

Mark.	Description	Date	Appr.

PRETTY LAKE COASTAL FLOODING MITIGATION, NORFOLK, VA

SOUTH-EAST OVERLAND FLOOD WALL - SHEET 2 OF 2

Designed by: BJ
Dwn by: BA
Ckd by: –
Reviewed by: –
Submitted by: MOFFATT & NICHOL
Date: MAR. 2012
M&N Project No. 7607-02
Drawing code: –
Drawing Scale: NONE
Plot scale: 1:1 (D SHEET)
Rev: –

moffatt & nichol
800 WORLD TRADE CENTER
NORFOLK, VA 23510
757-628-8222

PREPARED FOR:
CITY OF NORFOLK
DEPARTMENT OF PUBLIC WORKS
ENVIRONMENTAL STORM WATER
MANAGEMENT DIVISION

SEAL

Sheet Reference Number:
S-104
Sheet – of –

File: P:\7607\7607_01-04\500 CADD\520 submittals\760702-S-103; Plotted: 3/22/2012 6:52 PM by OWEN, STEPHEN; Saved: 3/22/2012 6:40 PM by BVARTABEDIAN

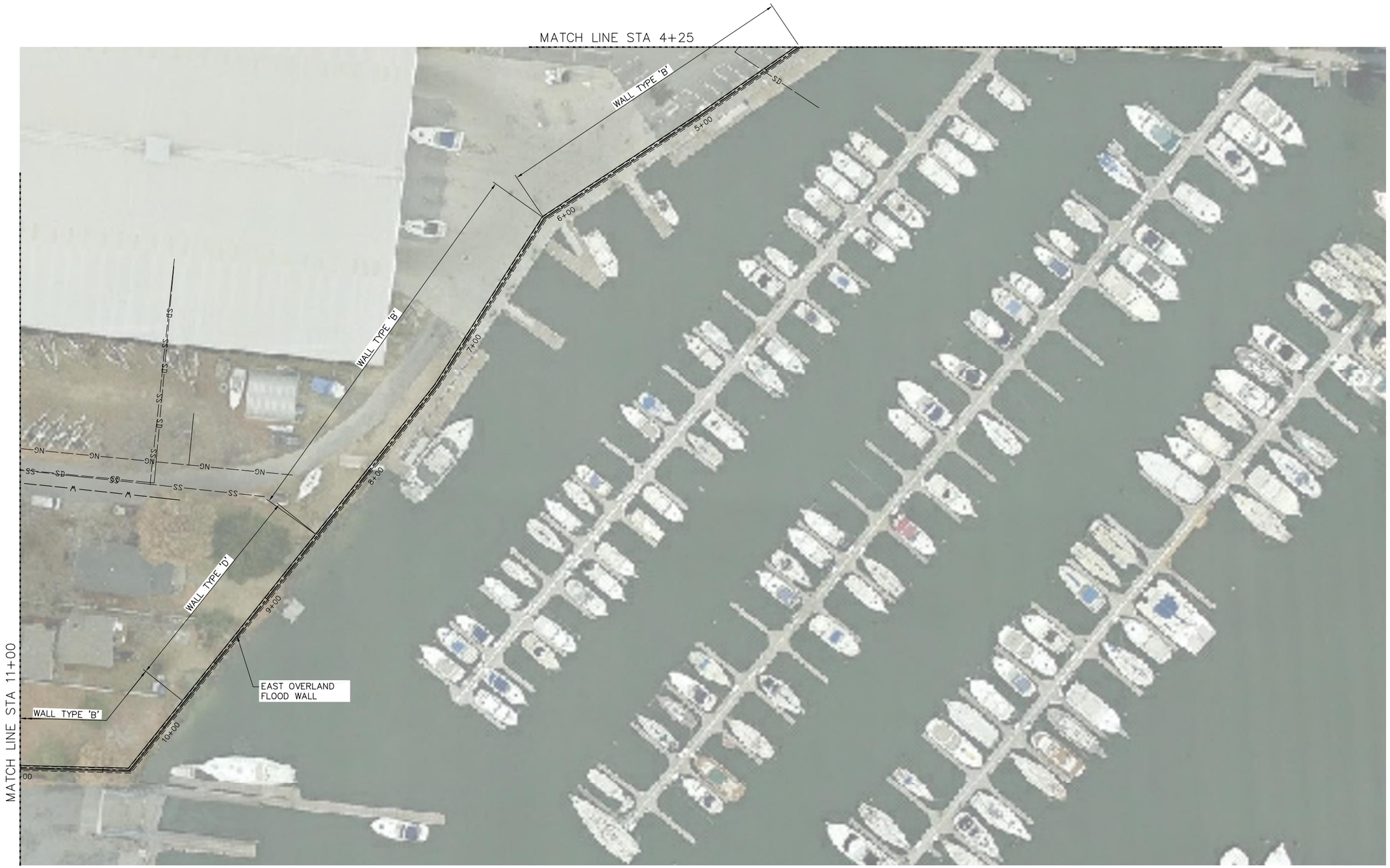

N

30' 0' 30' 60'

SCALE: 1"=30'

DRAWING SCALES SHOWN BASED ON 22"x34" DRAWING

PRELIMINARY
NOT TO BE USED FOR CONSTRUCTION

Mark	Description	Date	Appr.

PRETTY LAKE COASTAL FLOODING MITIGATION, NORFOLK, VA

EAST OVERLAND FLOOD WALL - SHEET 1 OF 2

Designed by: BJ
Dwn by: BA
Ckd by: –
Reviewed by: –
Submitted by: –
Date: MAR. 2012
M&N Project No. 7607-02
Drawing code:
Rev: –
Drawing Scale: NONE
Plot scale: 1:1 (D SHEET)

moffatt & nichol
800 WORLD TRADE CENTER
NORFOLK, VA 23510
757-628-8222

PREPARED FOR:
CITY OF NORFOLK
DEPARTMENT OF PUBLIC WORKS
ENVIRONMENTAL STORM WATER
MANAGEMENT DIVISION

MOFFATT & NICHOL

SEAL

Sheet Reference Number:
S-105
Sheet – of –

File: P:\7607\7607_01-04\500 CADD\520 submittals\7607-02_pretty-lake\submittals\760702-S-103; Plotted: 3/22/2012 6:53 PM by OWEN, STEPHEN; Saved: 3/22/2012 6:40 PM by BVARTABEDIAN

N

30' 0' 30' 60'

SCALE: 1"=30'

DRAWING SCALES SHOWN BASED ON 22"x34" DRAWING

CITY OF NORFOLK · TOWN 1682 · BOROUGH 1705 · CITY 1845

PRELIMINARY
NOT TO BE USED FOR CONSTRUCTION

Mark.	Description	Date	Appr.

PRETTY LAKE COASTAL FLOODING MITIGATION, NORFOLK, VA

EAST OVERLAND FLOOD WALL - SHEET 2 OF 2

moffatt & nichol
800 WORLD TRADE CENTER
NORFOLK, VA 23510
757-628-8222

PREPARED FOR:
CITY OF NORFOLK
DEPARTMENT OF PUBLIC WORKS
ENVIRONMENTAL STORM WATER MANAGEMENT DIVISION

Designed by: BJ	Date: MAR. 2012	Rev. –
Dwn by: BA	Ckd by: –	M&N Project No. 7607-02
Reviewed by: –	Drawing code:	
Submitted by: MOFFATT & NICHOL	Drawing Scale: NONE Plot scale: 1:1 (D SHEET)	

SEAL

Sheet Reference Number:
S-106
Sheet – of –

File: P:\7607\7607_01-04\500 CADD\520 submittals\760702-S-103; Plotted: 3/22/2012 6:53 PM by OWEN, STEPHEN; Saved: 3/22/2012 6:40 PM by BVARTABEDIAN

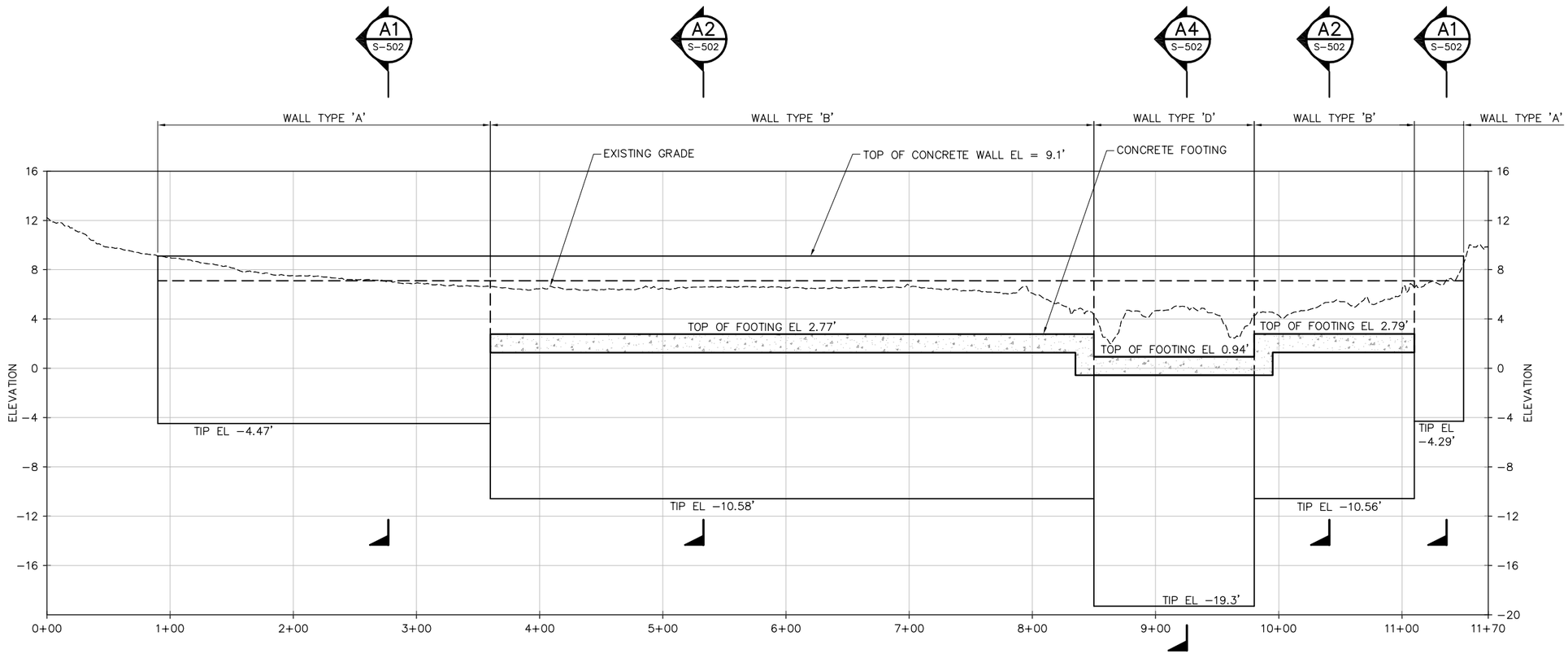

B1
S-103

EAST OVERLAND FLOOD WALL PROFILE

SCALE: HORIZONTAL: 1"=50'
VERTICAL: 1"=5'

LEGEND:

- EXISTING GROUND
- TOP OF CONCRETE WALL
- TOP OF SHEET PILE WALL
- FOOTING

50' 0' 50' 100'
HORIZONTAL SCALE: 1"=50'

5' 0' 5' 10'
VERTICAL SCALE: 1"=5'

DRAWING SCALES SHOWN BASED ON 22"x34" DRAWING

PRELIMINARY
NOT TO BE USED FOR CONSTRUCTION

Mark	Description	Date	Appr.

PRETTY LAKE COASTAL FLOODING MITIGATION, NORFOLK, VA

EAST OVERLAND FLOOD WALL PROFILE

Designed by: –		Date: MAR, 2012	Rev. –
Dwn by: BA	Ckd by: –	M&N Project No. 7607-02	
Reviewed by: –		Drawing code: –	
Submitted by: MOFFATT & NICHOL		Drawing Scale: NONE Plot scale: 1:1 (D SHEET)	

moffatt & nichol
800 WORLD TRADE CENTER
NORFOLK, VA 23510
757-628-8222

PREPARED FOR:
CITY OF NORFOLK
DEPARTMENT OF PUBLIC WORKS
ENVIRONMENTAL STORM WATER
MANAGEMENT DIVISION

SEAL

Sheet Reference Number:
S-107
Sheet – of –

File: P:\7607\7607_01-04\500 CADD\520 submittals\7607-02_pretty-lake\submittals\760702-S-107; Plotted: 3/22/2012 6:54 PM by OWEN, STEPHEN; Saved: 3/22/2012 6:17 PM by BVARTABEDIAN

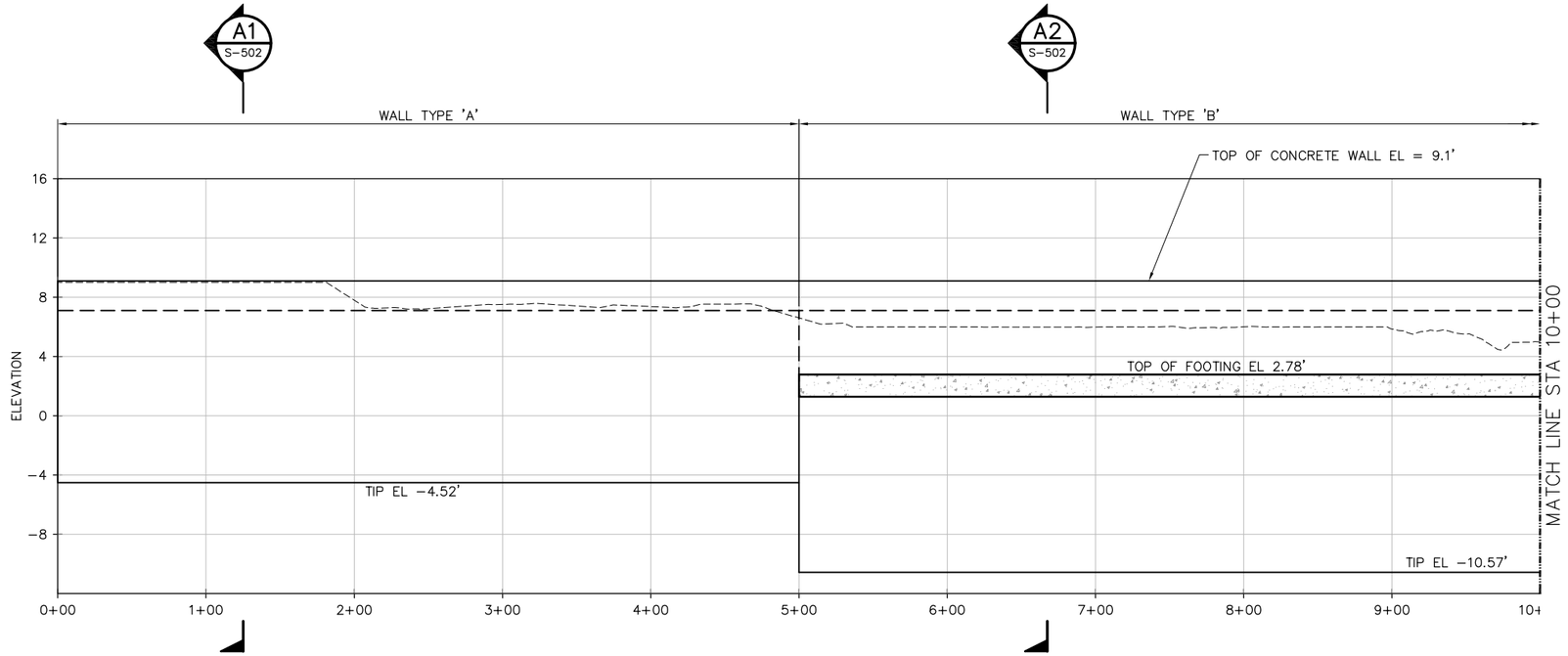

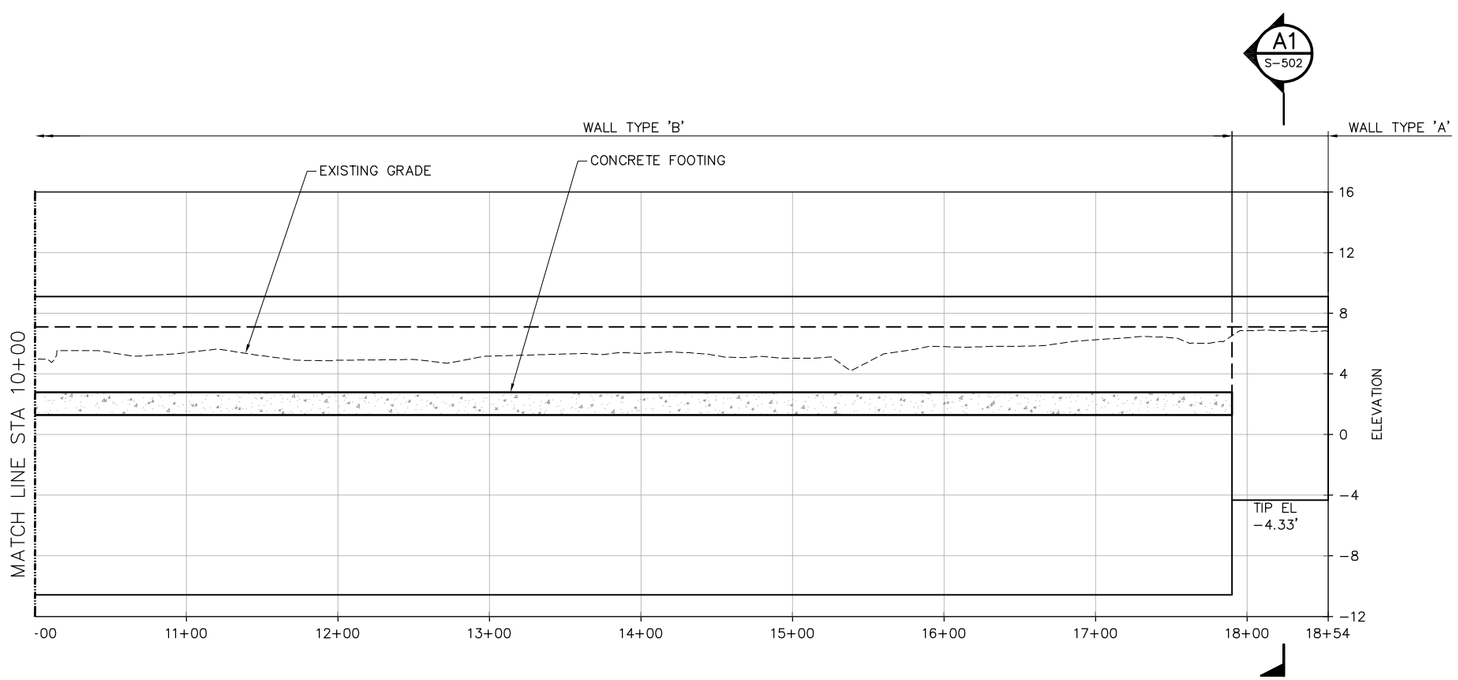

A1 S-103 **SOUTH-EAST OVERLAND FLOOD WALL PROFILE**

SCALE: HORIZONTAL: 1"=50'
VERTICAL: 1"=5'

LEGEND:

- EXISTING GROUND
- TOP OF CONCRETE WALL
- TOP OF SHEET PILE WALL
- FOOTING

50' 0' 50' 100'
HORIZONTAL SCALE: 1"=50'

5' 0' 5' 10'
VERTICAL SCALE: 1"=5'

DRAWING SCALES SHOWN BASED ON 22"x34" DRAWING

PRELIMINARY
NOT TO BE USED FOR CONSTRUCTION

Mark	Description	Date	Appr.

PRETTY LAKE COASTAL FLOODING MITIGATION, NORFOLK, VA

SOUTH-EAST OVERLAND FLOOD WALL PROFILE

Designed by: –
Date: MAR, 2012
Rev. –
Dwn by: BA
Ckd by: –
M&N Project No. 7607-02
Reviewed by: –
Drawing code: –
Submitted by: MOFFATT & NICHOL
Drawing Scale: NONE
Plot scale: 1:1 (D SHEET)

moffatt & nichol
800 WORLD TRADE CENTER
NORFOLK, VA 23510
757-628-8222

PREPARED FOR:
CITY OF NORFOLK
DEPARTMENT OF PUBLIC WORKS
ENVIRONMENTAL STORM WATER
MANAGEMENT DIVISION

SEAL

Sheet Reference Number:
S-108
Sheet – of –

File: P:\7607\7607_01-04\500 CADD\520 submittals\7607-02_pretty-lake\submittals\760702-S-107; Plotted: 3/22/2012 6:55 PM by OWEN, STEPHEN; Saved: 3/22/2012 6:17 PM by BVARTABEDIAN

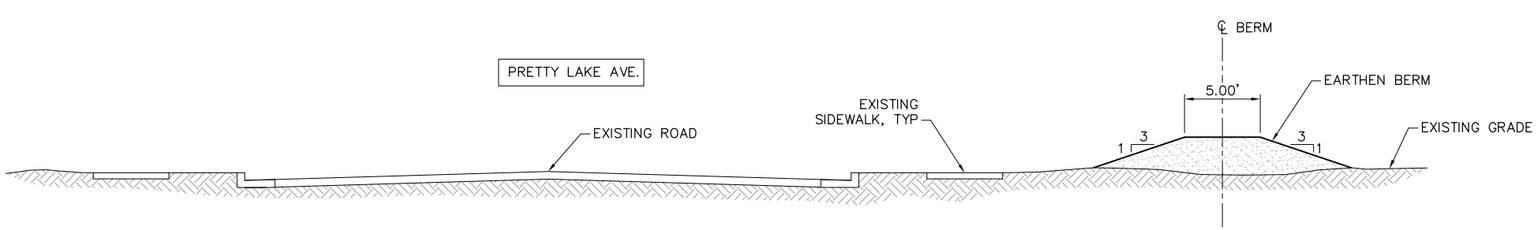

A1 S-109 **TYPICAL SECTION – BERM**
SCALE: 1"=5'

5' 0' 5' 10'
SCALE: 1"=5'

20' 0' 20' 40'
SCALE: 1"=20'

DRAWING SCALES SHOWN BASED ON 22"x34" DRAWING

PRELIMINARY
NOT TO BE USED FOR CONSTRUCTION

Mark	Description	Date	Appr.

PRETTY LAKE COASTAL FLOODING MITIGATION, NORFOLK, VA

BERM AT PRETTY LAKE AVE.

Designed by: BJ
Dwn by: BA
Cxd by: –
Reviewed by: –
Submitted by: MOFFATT & NICHOL
Date: MAR. 2012
M&N Project No. 7607-02
Drawing code: –
Rev: –
Drawing Scale: NONE
Plot scale: 1:1 (D SHEET)

moffatt & nichol
800 WORLD TRADE CENTER
NORFOLK, VA 23510
757-628-8222

PREPARED FOR:
CITY OF NORFOLK
DEPARTMENT OF PUBLIC WORKS
ENVIRONMENTAL STORM WATER
MANAGEMENT DIVISION

SEAL

Sheet Reference Number:
S-109
Sheet – of –

File: P:\7607\7607_01-04\500 CADD\520 submittals\7607-02_pretty-lake\submittals\760702-S-109; Plotted: 3/22/2012 6:55 PM by OWEN, STEPHEN; Saved: 3/22/2012 6:40 PM by BVARTABEDIAN

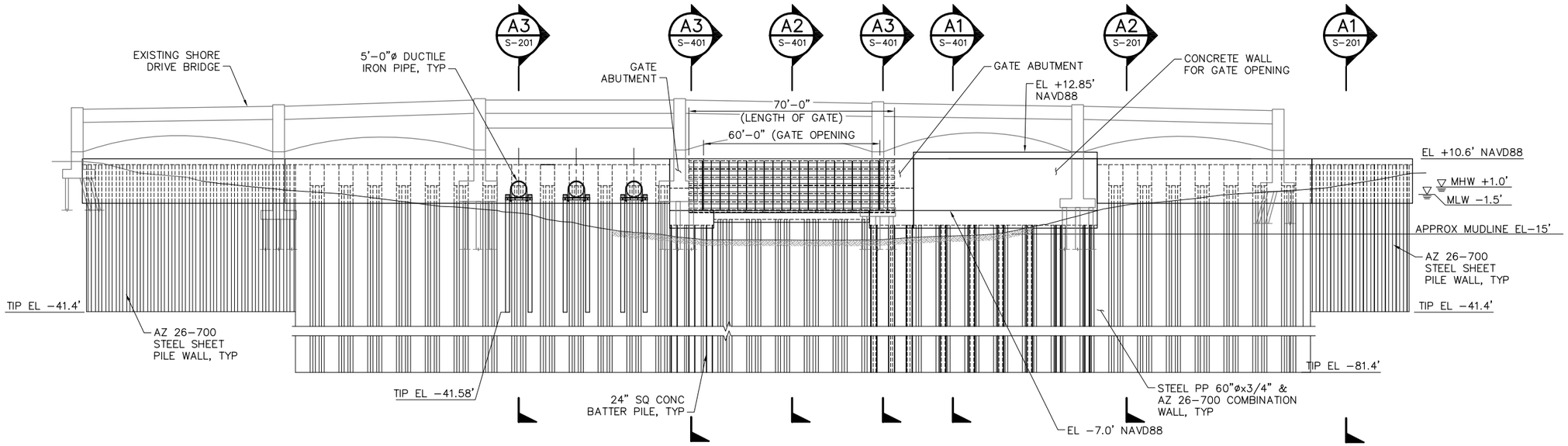

C1 S-101 **ELEVATION – SHEET PILE WALL**
SCALE: 1"=20'-0"

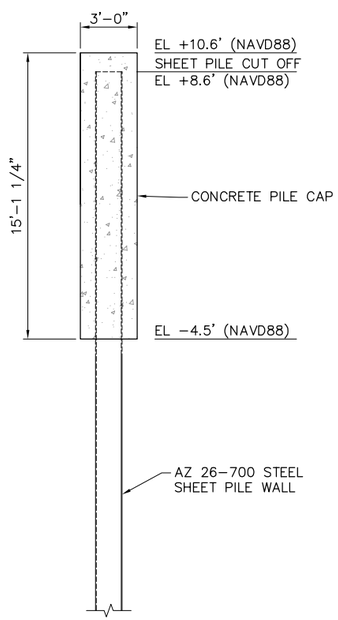

A1 S-201 **SECTION – TYP WALL @ SHEET PILE WALL**
SCALE: 1/4"=1'-0"

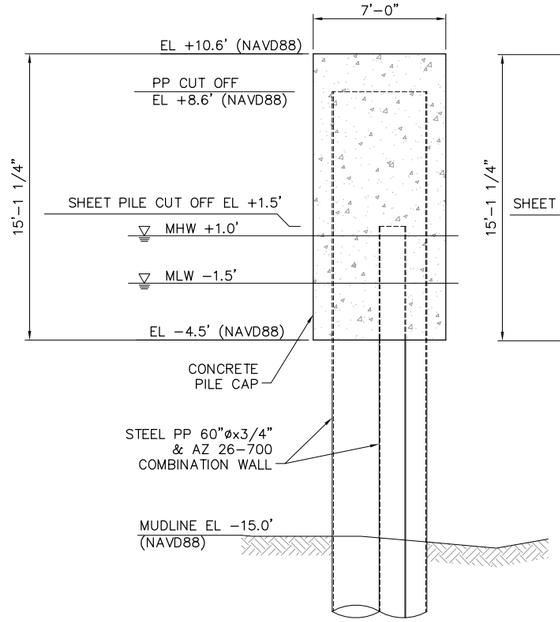

A2 S-201 S-401 **SECTION – TYP WALL @ COMBI-WALL**
SCALE: 1/4"=1'-0"

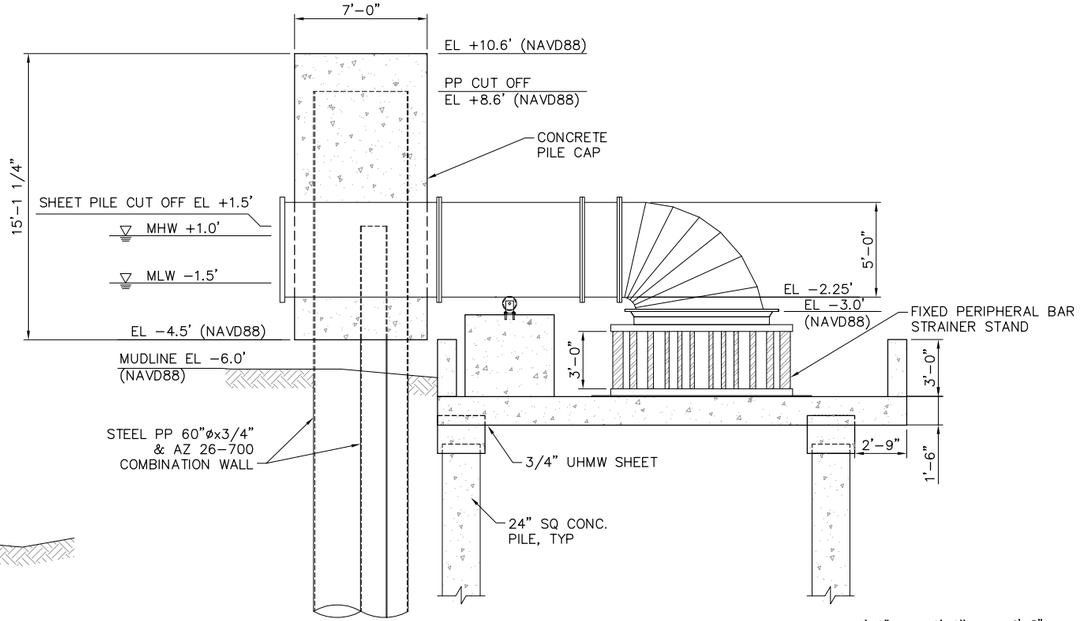

A3 S-201 S-401 **SECTION – TYP WALL @ PUMPS**
SCALE: 1/4"=1'-0"

4'-0" 0'-0" 4'-0" 8'-0"
SCALE: 1/4"=1'-0"

20' 0' 20' 40'
SCALE: 1"=20'

DRAWING SCALES SHOWN BASED ON 22"x34" DRAWING

PRELIMINARY
NOT TO BE USED FOR CONSTRUCTION

Mark	Description	Date	Appr.

PRETTY LAKE COASTAL FLOODING MITIGATION, NORFOLK, VA

ELEVATION VIEW OF FLOOD WALL

Designed by: MR/ JEG
Dwn by: BA
Ckd by: –
Reviewed by: –
Submitted by: MOFFATT & NICHOL
Date: MAR, 2012
M&N Project No. 7607-02
Drawing code: –
Drawing Scale: NONE
Plot scale: 1:1 (0 SHEET)
Rev. –

moffatt & nichol
800 WORLD TRADE CENTER
NORFOLK, VA 23510
757-628-8222

PREPARED FOR:
CITY OF NORFOLK
DEPARTMENT OF PUBLIC WORKS
ENVIRONMENTAL STORM WATER MANAGEMENT DIVISION

SEAL

Sheet Reference Number:
S-201
Sheet – of –

File: P:\7607\7607_01-04\500 CADD\520 submittals\7607-02_pretty-lake\submittals\760702-S-201; Plotted: 3/22/2012 6:56 PM by OWEN, STEPHEN; Saved: 3/22/2012 6:39 PM by BVARTABEDIAN

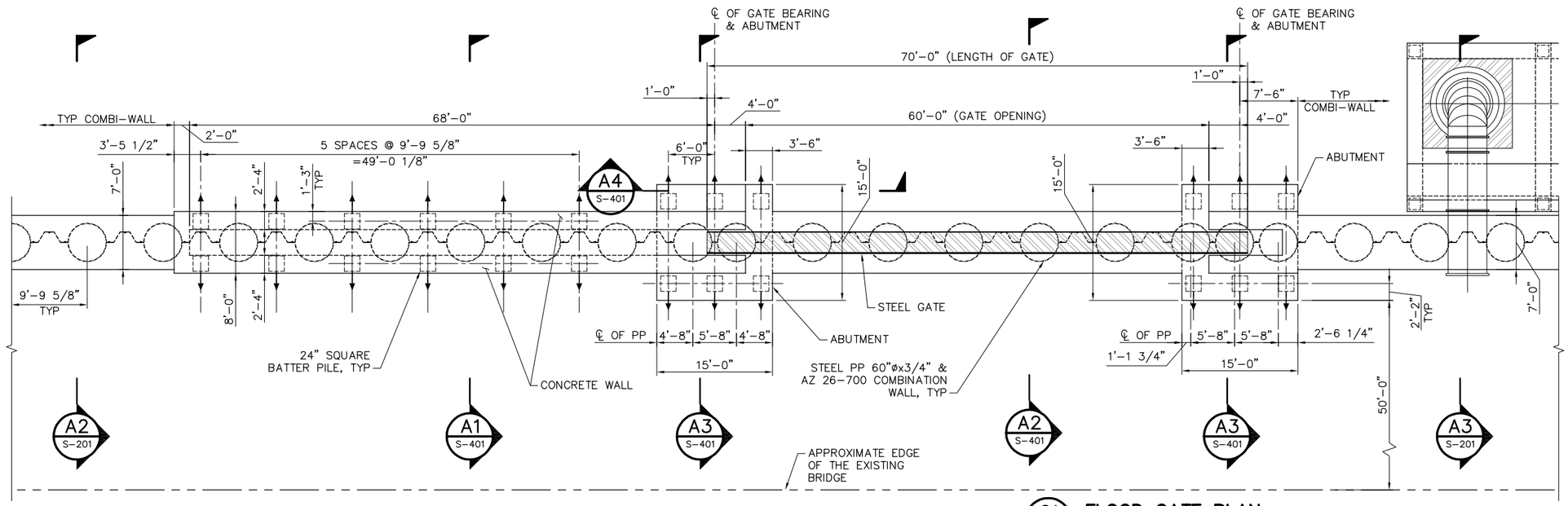

C1 FLOOD GATE PLAN
S-101 SCALE: 1/8"=1'-0"

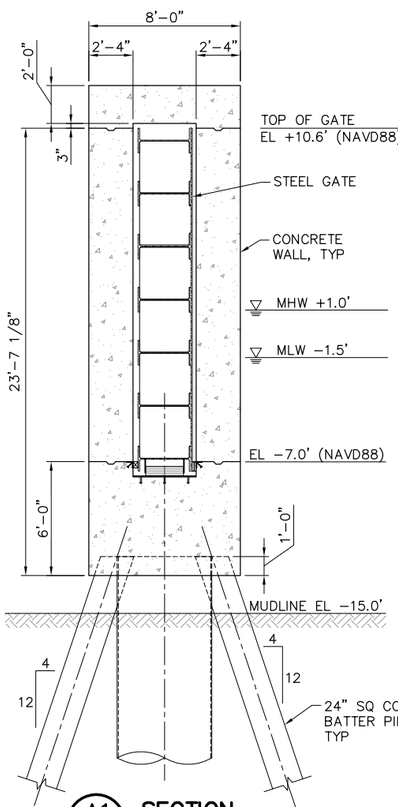

A1 SECTION
S-201 SCALE: 1/4"=1'-0"
S-401

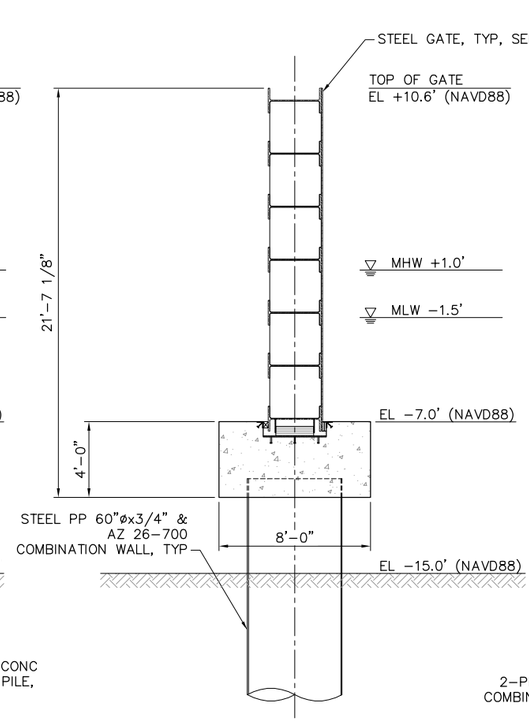

A2 SECTION AT GATE
S-201 SCALE: 1/4"=1'-0"
S-401

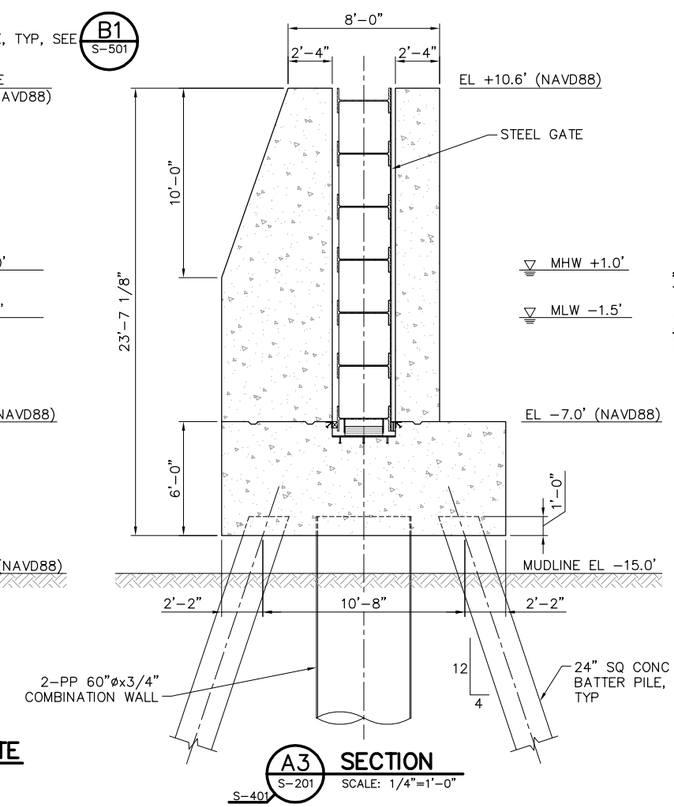

A3 SECTION
S-201 SCALE: 1/4"=1'-0"
S-401

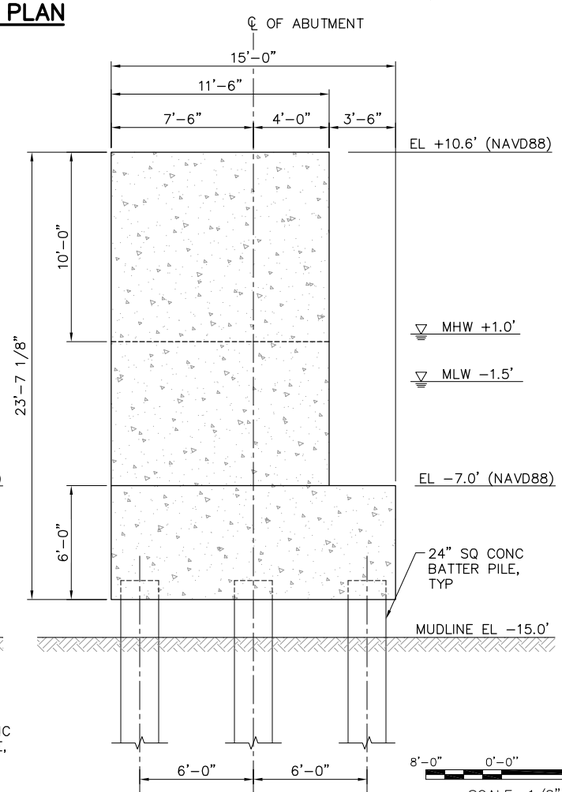

A4 SECTION
S-401 SCALE: 1/4"=1'-0"

8'-0" 0'-0" 8'-0" 16'-0"
SCALE: 1/8"=1'-0"

4'-0" 0'-0" 4'-0" 8'-0"
SCALE: 1/4"=1'-0"

DRAWING SCALES SHOWN BASED ON 22"x34" DRAWING

PRELIMINARY
NOT TO BE USED FOR CONSTRUCTION

Mark.	Description	Date	Appr.

PRETTY LAKE COASTAL FLOODING MITIGATION, NORFOLK, VA

PARTIAL FLOOD GATE WALL PLAN

Designed by: MR	Date: MAR, 2012
Dwn by: BA	Ckd by: –
Reviewed by: –	Drawing code:
Submitted by: MOFFATT & NICHOL	Drawing Scale: NONE
	Plot scale: 1:1 (0 SHEET)
	Rev: –

moffatt & nichol
800 WORLD TRADE CENTER
NORFOLK, VA 23510
757-628-8222

PREPARED FOR:
CITY OF NORFOLK
DEPARTMENT OF PUBLIC WORKS
ENVIRONMENTAL STORM WATER MANAGEMENT DIVISION

SEAL

Sheet Reference Number:
S-401
Sheet – of –

File: P:\7607\7607_01-04\500 CADD\520 submittals\7607-02_pretty-lake\submittals\760702-S-401; Plotted: 3/22/2012 6:56 PM by OWEN, STEPHEN; Saved: 3/22/2012 5:41 PM by BVARTABEDIAN

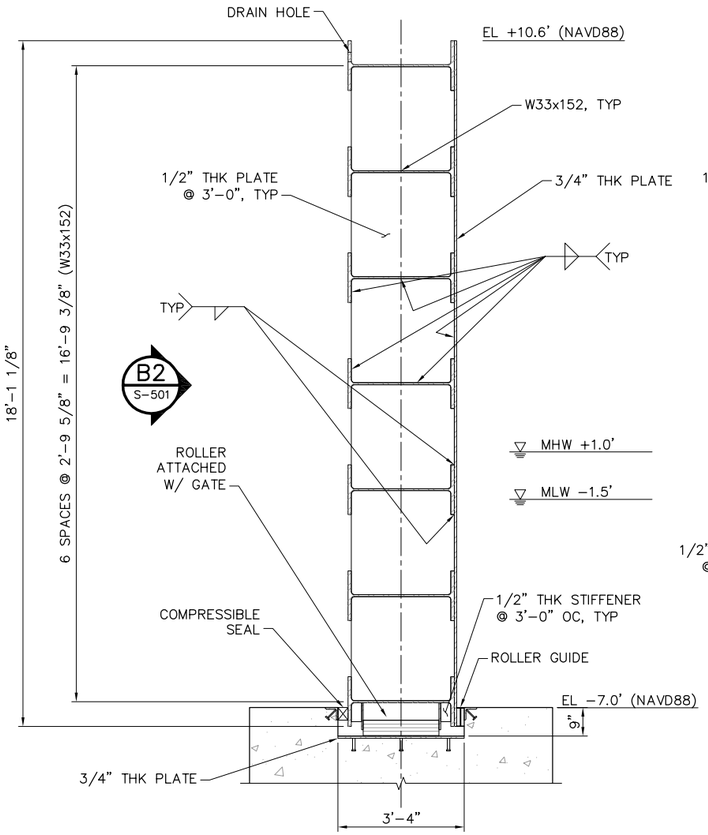

B1 S-401 **GATE DETAIL**
SCALE: 1/2"=1'-0"

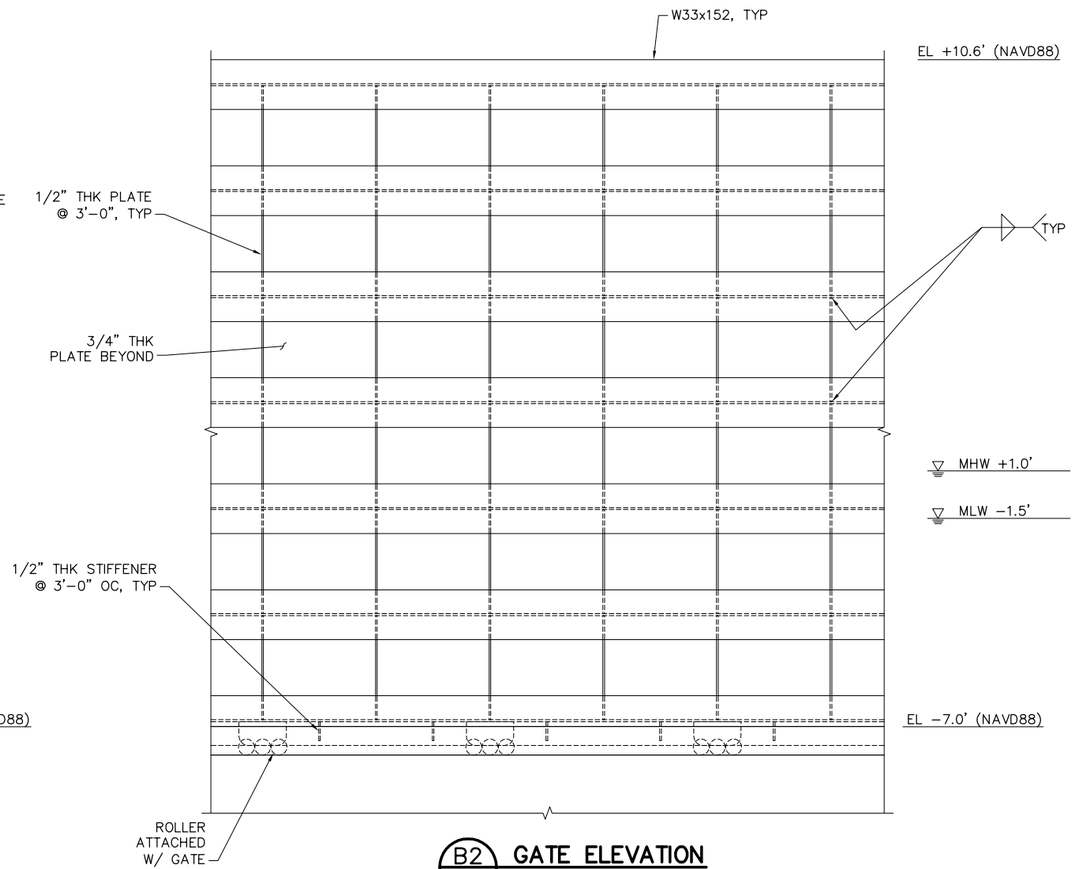

B2 S-501 **GATE ELEVATION**
SCALE: 1/2"=1'-0"

2'-0" 0'-0" 2'-0" 4'-0"
SCALE: 1/2"=1'-0"

DRAWING SCALES SHOWN BASED ON 22"x34" DRAWING

PRELIMINARY
NOT TO BE USED FOR CONSTRUCTION

Mark	Description	Date	Appr.

PRETTY LAKE COASTAL FLOODING MITIGATION, NORFOLK, VA

FLOOD GATE WALL DETAILS

Designed by: –
Dwn by: BA
Ckd by: –
Reviewed by: –
Submitted by: MOFFATT & NICHOL
Date: MAR. 2012
M&N Project No. 7607-02
Drawing code:
Drawing Scale: NONE
Plot scale: 1:1 (D SHEET)
Rev. –

moffatt & nichol
800 WORLD TRADE CENTER
NORFOLK, VA 23510
757-628-8222

PREPARED FOR:
CITY OF NORFOLK
DEPARTMENT OF PUBLIC WORKS
ENVIRONMENTAL STORM WATER
MANAGEMENT DIVISION

SEAL

Sheet Reference Number:
S-501
Sheet – of –

File: P:\7607\7607_01-04\500 CADD\520 submittals\760702-S-501; Plotted: 3/22/2012 6:56 PM by OWEN, STEPHEN; Saved: 1/10/2012 12:32 PM by BAYTODA

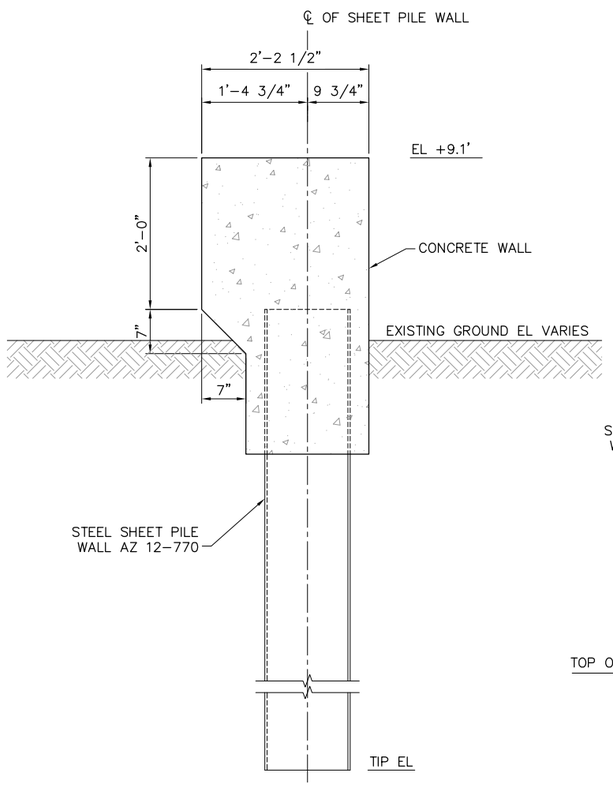

A1 S-107 SECTION – SHEET PILE WALL TYPE 'A'
S-108
SCALE: 1"=1'-0"

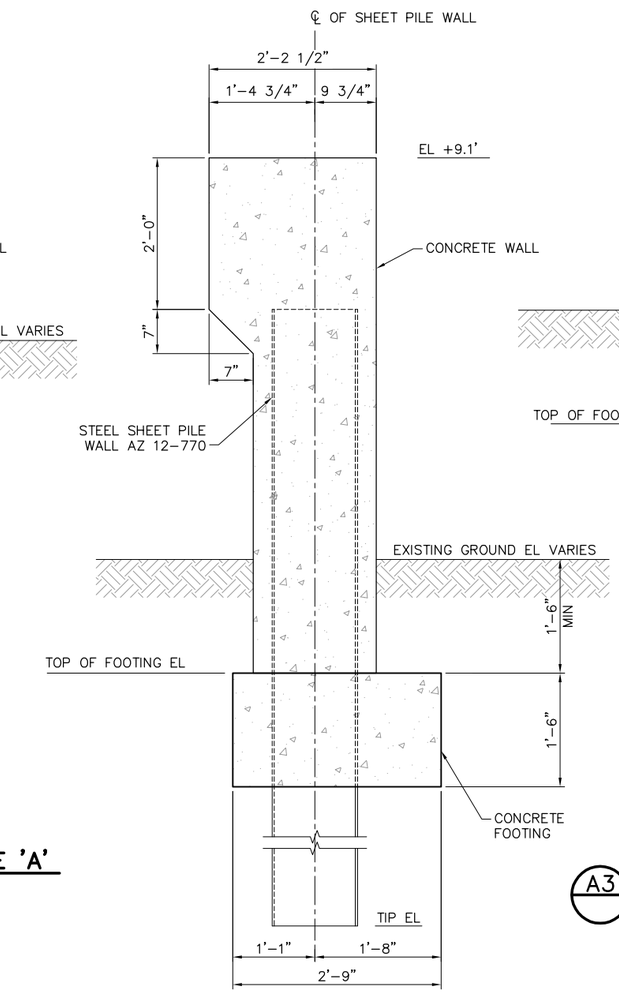

A2 S-107 SECTION – SHEET PILE WALL TYPE 'B'
S-108
SCALE: 1"=1'-0"

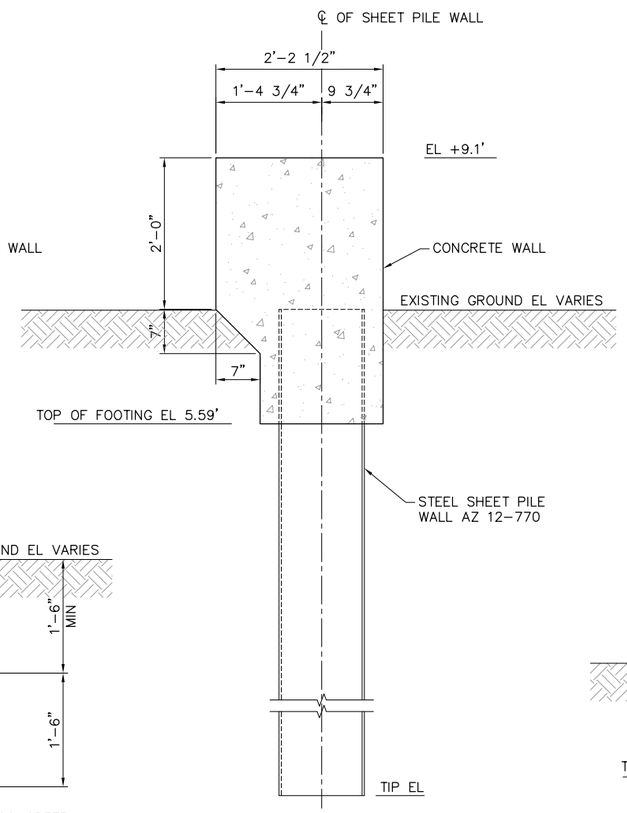

A3 SECTION – SHEET PILE WALL TYPE 'C'
SCALE: 1"=1'-0"

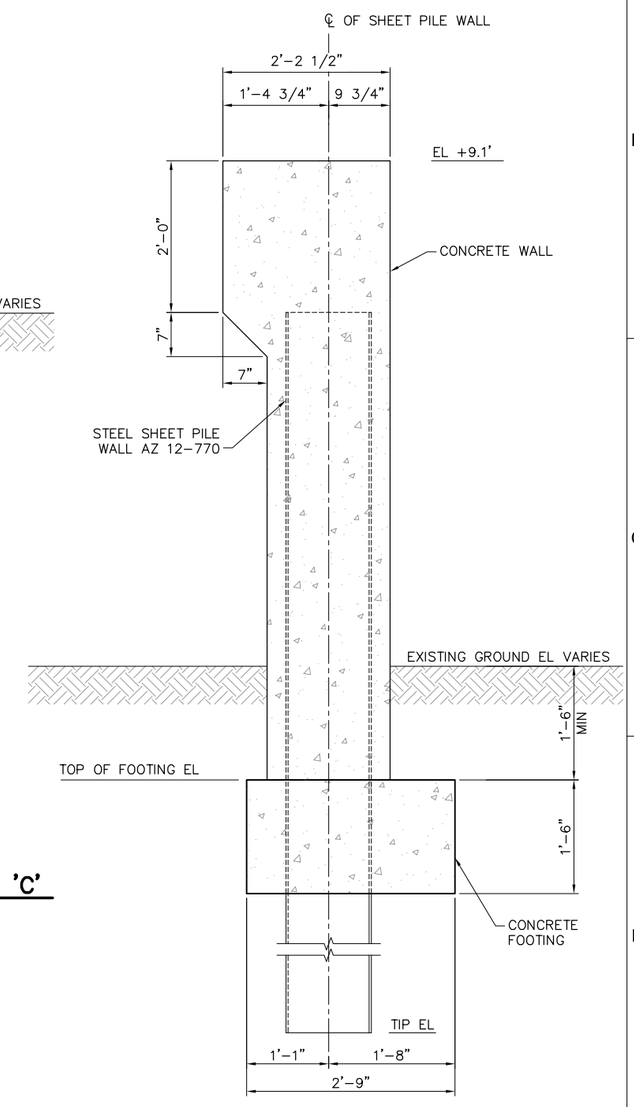

A4 S-107 SECTION – SHEET PILE WALL TYPE 'D'
SCALE: 1"=1'-0"

1'-0" 0'-0" 1'-0" 2'-0"
SCALE: 1"=1'-0"

DRAWING SCALES SHOWN BASED ON 22"x34" DRAWING

PRELIMINARY
NOT TO BE USED FOR CONSTRUCTION

Mark	Description	Date	Appr.

PRETTY LAKE COASTAL FLOODING MITIGATION, NORFOLK, VA

SHORE DRIVE AND LITTLE CREEK DRIVE OVERLAND FLOOD WALL
DETAILS

Designed by: MR
Dwn by: BA
Ckd by: –
Reviewed by: –
Submitted by: MOFFATT & NICHOL
Date: MAR. 2012
M&N Project No. 7607-02
Drawing code:
Drawing Scale: NONE
Plot scale: 1:1 (D SHEET)
Rev. –

moffatt & nichol
800 WORLD TRADE CENTER
NORFOLK, VA 23510
757-628-8222

PREPARED FOR:
CITY OF NORFOLK
DEPARTMENT OF PUBLIC WORKS
ENVIRONMENTAL STORM WATER
MANAGEMENT DIVISION

SEAL

Sheet Reference Number:
S-502
Sheet – of –

File: P:\7607\7607_01-04\500 CADD\520 submittals\7607-02_pretty-lake\submittals\760702-S-502. Plotted: 3/22/2012 6:59 PM by OWEN, STEPHEN; Saved: 3/22/2012 6:59 PM by SOWEN

A1 E-001 **ELECTRICAL SITE PLAN**
SCALE: 1"=30'

N

30' 0' 30' 60'
SCALE: 1"=30'

DRAWING SCALES SHOWN BASED ON 22"x34" DRAWING

PRELIMINARY
NOT TO BE USED FOR CONSTRUCTION

Mark	Description	Date	Appr.

PRETTY LAKE COASTAL FLOODING MITIGATION, NORFOLK, VA

ELECTRICAL SITE PLAN

Designed by: RJC
Dwn by: BA
Ckd by: –
Reviewed by: –
Submitted by: MOFFATT & NICHOL
Date: MAR. 2012
M&N Project No. 7607-02
Rev: –
Drawing code: –
Drawing Scale: NONE
Plot scale: 1:1 (D SHEET)

moffatt & nichol
800 WORLD TRADE CENTER
NORFOLK, VA 23510
757-628-8222

PREPARED FOR:
CITY OF NORFOLK
DEPARTMENT OF PUBLIC WORKS
ENVIRONMENTAL STORM WATER
MANAGEMENT DIVISION

SEAL

Sheet Reference Number:
E-101
Sheet – of –

File: P:\7607\7607_01-04\500 CADD\520 submittals\760702-E-101; Plotted: 3/22/2012 6:59 PM by OWEN, STEPHEN; Saved: 3/21/2012 1:34 PM by BVARTABEDIAN

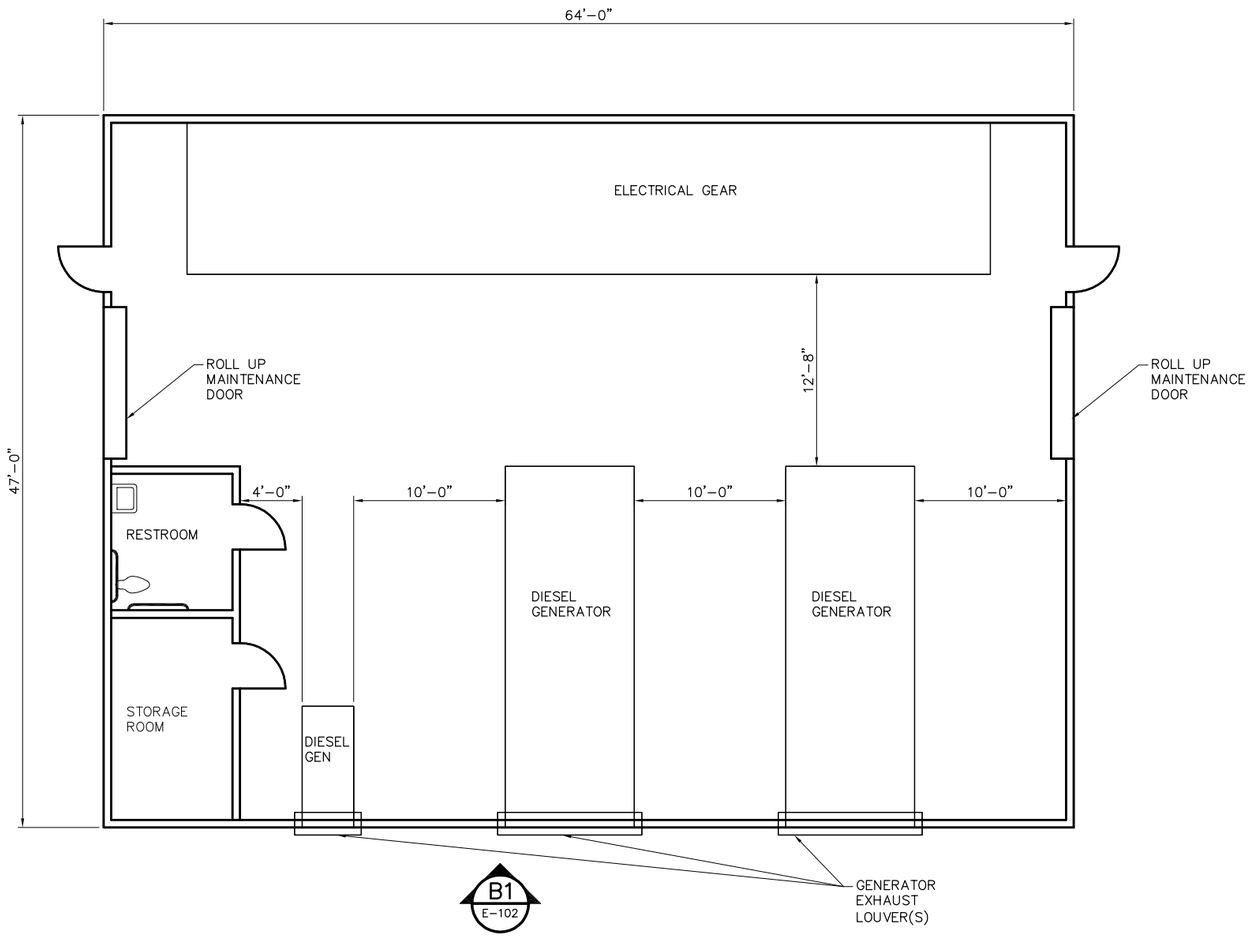

B1 E-101 **GENERATOR BUILDING ELECTRICAL PLAN**

SCALE: 1"=5'

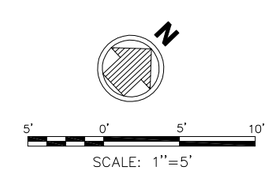

DRAWING SCALES SHOWN BASED ON 22"x34" DRAWING

PRELIMINARY
NOT TO BE USED FOR CONSTRUCTION

Mark	Description	Date	Appr.

PRETTY LAKE COASTAL FLOODING MITIGATION, NORFOLK, VA

GENERATOR BUILDING ELECTRICAL PLAN

Designed by: RJC
Dwn by: RJC
Ckd by: JW
Reviewed by: JW
Submitted by: MOFFATT & NICHOL
Date: MAR, 2012
M&N Project No. 7607-02
Drawing code:
Drawing Scale: NONE
Plot scale: 1:1 (D SHEET)
Rev. -

moffatt & nichol
800 WORLD TRADE CENTER
NORFOLK, VA 23510
757-628-8222

PREPARED FOR:
CITY OF NORFOLK
DEPARTMENT OF PUBLIC WORKS
ENVIRONMENTAL STORM WATER MANAGEMENT DIVISION

SEAL

Sheet Reference Number:
E-102
Sheet - of -

File: P:\7607\7607_01-04\500 CADD\520 submittals\7607-02_pretty-lake\submittals\760702-E-102; Plotted: 3/22/2012 7:00 PM by OWEN, STEPHEN; Saved: 3/12/2012 10:03 AM by BAYTODA

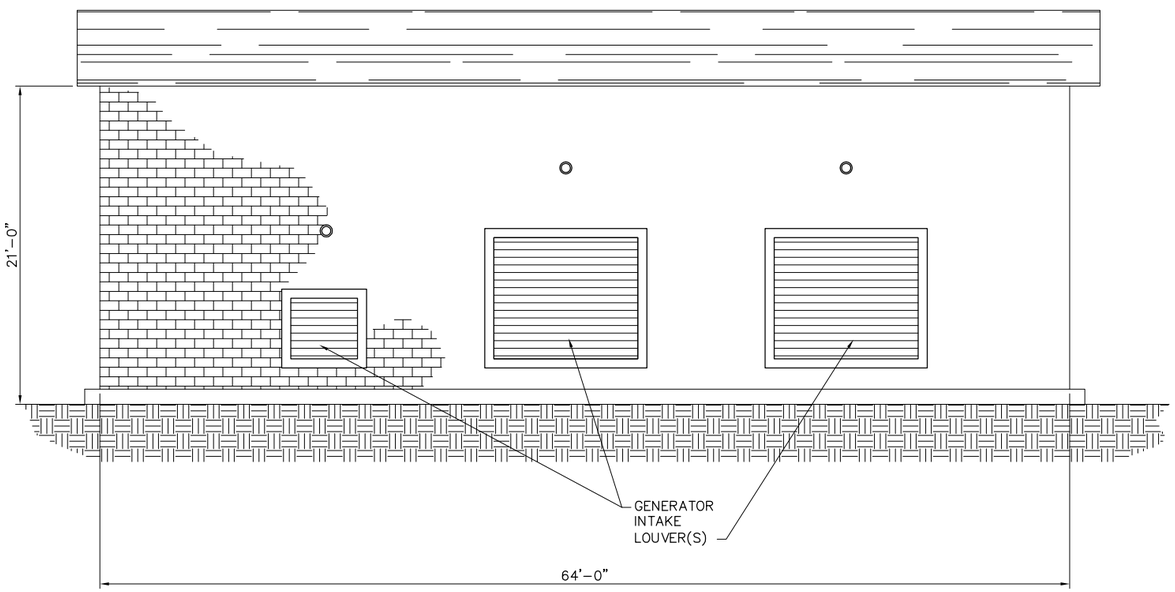

B1 / E-101 **GENERATOR BUILDING ELEVATION**
SCALE: 1" = 5'

5' 0' 5' 10'
SCALE: 1"=5'

DRAWING SCALES SHOWN BASED ON 22"x34" DRAWING

PRELIMINARY
NOT TO BE USED FOR CONSTRUCTION

Mark	Description	Date	Appr.

PRETTY LAKE COASTAL FLOODING MITIGATION, NORFOLK, VA

GENERATOR BUILDING ELEVATION

Designed by: RJC
Dwn by: RJC
Ckd by: JW
Reviewed by: JW
Submitted by: MOFFATT & NICHOL
Date: MAR. 2012
M&N Project No. 7607-02
Drawing code:
Rev. -
Drawing Scale: NONE
Plot scale: 1:1 (0 SHEET)

moffatt & nichol
800 WORLD TRADE CENTER
NORFOLK, VA 23510
757-628-6222

PREPARED FOR:
CITY OF NORFOLK
DEPARTMENT OF PUBLIC WORKS
ENVIRONMENTAL STORM WATER
MANAGEMENT DIVISION

SEAL

Sheet Reference Number:
E-201
Sheet - of -

File: P:\7607\7607_01-04\500 CADD\520 submittals\7607-02_pretty-lake\submittals\760702-E-201; Plotted: 3/22/2012 7:00 PM by OWEN, STEPHEN; Saved: 3/12/2012 9:46 AM by BAYTODA

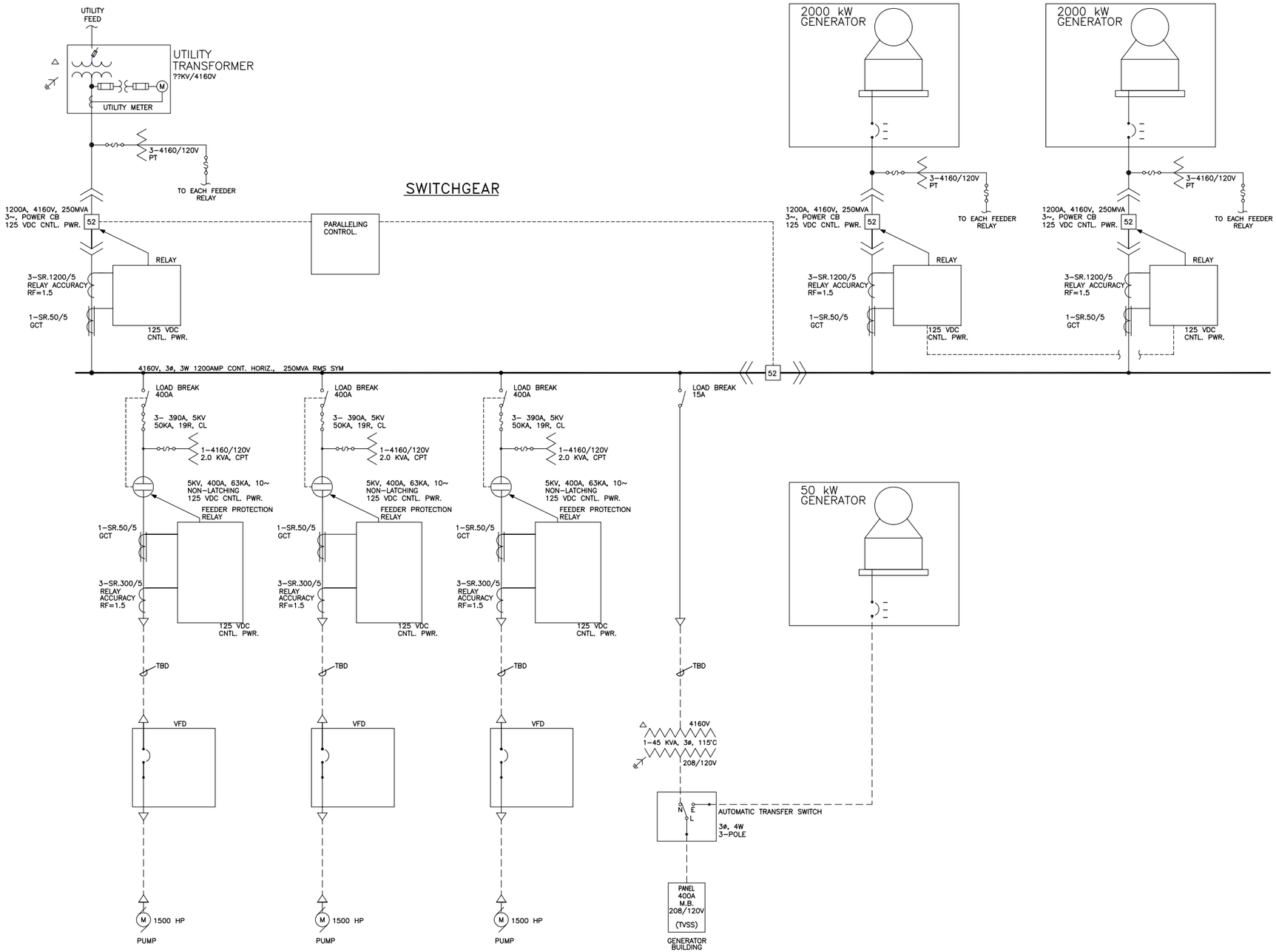

A1 E-601 **ELECTRICAL SINGLE LINE DIAGRAM**

SCALE: NTS

DRAWING SCALES SHOWN BASED ON 22"x34" DRAWING

PRELIMINARY
NOT TO BE USED FOR CONSTRUCTION

Mark.	Description	Date	Appr.

PRETTY LAKE COASTAL FLOODING MITIGATION, NORFOLK, VA

ELECTRICAL SINGLE LINE DIAGRAM

Designed by: RJC
Dwn by: RJC
Ckd by: JW
Reviewed by: JW
Submitted by: MOFFATT & NICHOL
Date: MAR. 2012
M&N Project No. 7607-02
Drawing code:
Drawing Scale: NONE
Plot scale: 1:1 (0 SHEET)
Rev. -

moffatt & nichol
800 WORLD TRADE CENTER
NORFOLK, VA 23510
757-628-8222

PREPARED FOR:
CITY OF NORFOLK
DEPARTMENT OF PUBLIC WORKS
ENVIRONMENTAL STORM WATER MANAGEMENT DIVISION

SEAL

Sheet Reference Number:
E-601
Sheet - of -

File: P:\7607\7607_01-04\500 CADD\520 submittals\7607-02_pretty-lake\submittals\760702-E-601; Plotted: ---- by OWEN, STEPHEN; Saved: 3/12/2012 9:46 AM by BAY100A