GENERAL NOTES:

1. THE CONTRACTOR IS ENCOURAGED TO VISIT THE SITE PRIOR TO SUBMITTING BID.

2. ELEVATIONS ARE BASED ON NAVD-88 (92 ADJUSTED)(NORTH AMERICAN VERTICAL DATUM). BENCH MARKS ARE SHOWN ON DWG. XXX AND PLAN SHEETS.

3. BORING LOCATIONS ARE SHOWN ON DWG. XXX.

4. FIELD ENGINEERING INFORMATION: ALL REQUESTS FOR INSPECTIONS, AND FIELD CONSTRUCTION INFORMATION SHOULD BE DIRECTED TO: CHIEF OF CONSTRUCTION, LARRY KIGHT, 823-1013

5. PRIOR TO THE SCHEDULING OF A PRE-CONSTRUCTION CONFERENCE, THE CONTRACTOR SHALL SUBMIT A PRELIMINARY DETAILED TRAFFIC CONTROL PLAN FOR REVIEW BY THE DIVISION OF TRAFFIC ENGINEERING, DEPARTMENT OF PUBLIC WORKS. THE TRAFFIC CONTROL PLAN AS WELL AS ALL TRAFFIC CONTROL DEVICES UTILIZED ON THE PROJECT MUST COMPLY WITH THE "FEDERAL MANUAL ON UNIFORM TRAFFIC CONTROL DEVICES" (MUTCD) FOR STREETS AND HIGHWAYS. FOLLOWING APPROVAL OF THE PLAN, A REPRODUCIBLE DRAWING SHALL BE SUBMITTED TO THE FIELD ENGINEERING OFFICE FOR USE AND DISTRIBUTION.

6. SUBMITTALS ON MATERIALS FOR THIS PROJECT SHALL BE APPROVED BY THE FIELD ENGINEERING OFFICE PRIOR TO BEGINNING CONSTRUCTION. CONTRACTOR TO USE APPROVED PRODUCTS LIST WHERE EVER POSSIBLE.

7. A CONSTRUCTION SCHEDULE SHALL BE SUBMITTED TO THE FIELD ENGINEERING OFFICE, PRIOR TO THE SCHEDULING OF THE PRE-CONSTRUCTION CONFERENCE.

8. ALL WORK WITHIN THE RIGHT OF WAY SHALL COMPLY WITH THE CITY OF NORFOLK <u>RIGHT OF WAY EXCAVATION & RESTORATION MANUAL</u>, (ORDINANCE NO. 40,778), DEPT. OF PUBLIC WORKS, DIVISION OF TRANSPORTATION. THE DOCUMENT MAY BE DOWNLOADED AT http://www.norfolk.gov/PublicWorks/

9. THERE MAY BE A C.B.D. TRAFFIC CONTROL SYSTEM IN THIS AREA. FOR PROTECTION OF THIS SYSTEM, PHONE THE PUBLIC WORKS DEPARTMENT BEFORE STARTING WORK: 664-7300

10. CONTRACTOR SHALL CONFORM TO THE "OVERHEAD HIGH VOLTAGE ACT" (EFFECTIVE JULY 1, 1989) AND SHALL CONTACT THE NECESSARY AUTHORITIES PRIOR TO START OF CONSTRUCTION.

11. THE DEPARTMENT OF UTILITIES WILL OBTAIN ALL NECESSARY TREE PERMITS. THE CONTRACTOR SHALL CONFORM TO ALL REQUIREMENTS OF THE "CITY OF NORFOLK TREE ORDINANCE" (EFFECTIVE FEBRUARY 15, 2005).

12. CONTRACTOR TO NOTIFY THE UTILITIES INSPECTOR ON FIRST IDENTIFICATION OF CONFLICT WITH STORMWATER INFRASTRUCTURE.

13. STATE LAW MANDATES THE NOTIFICATION OF UTILITY OWNERS 48 HOURS IN ADVANCE OF EXCAVATION. FOR LOCATION OF UTILITIES, CALL 'MISS UTILITY' AT 1-800-552-7001 FOR:

    WATER & SEWER
    H.R.S.D.
    VERIZON TELEPHONE
    DOMINION VA. POWER
    VA. NATURAL GAS
    TRAFFIC CONTROLS
    STORM DRAIN
    COX CABLE T.V.

14. THE CONTRACTOR SHALL BE REQUIRED AND AGREES TO COMPLY WITH ALL THE PROVISIONS OF THE "VIRGINIA UNDERGROUND UTILITY DAMAGE PREVENTION ACT" (SECTION 56-265.14 et seq., CODE OF VIRGINIA, 1950, AS AMENDED) AND HEREBY AGREES TO HOLD THE CITY OF NORFOLK HARMLESS AGAINST ANY LOSS, DAMAGES, OR CLAIMS OF ANY NATURE WHATSOEVER ARISING OUT OF THE CONTRACTOR'S FAILURE TO COMPLY WITH THE REQUIREMENTS OF THIS ACT.

15. CONTRACTOR SHALL TAKE THE NECESSARY PRECAUTIONS TO PROTECT THE EXISTING UTILITIES AND MAINTAIN UNINTERRUPTED SERVICE, ANY DAMAGE DONE TO THE UTILITIES SHALL BE IMMEDIATELY REPAIRED AT CONTRACTOR'S EXPENSE.

16. EXISTING UTILITIES SHOWN ARE BASED ON AVAILABLE RECORDS AND FIELD SURVEYS, AND IS NOT GUARANTEED TO BE EXACT OR COMPLETE. CONTRACTOR SHALL LOCATE ALL EXISTING UTILITIES IN ADVANCE OF CONSTRUCTION.

17. CONTRACTOR SHALL HAVE A SET OF PROJECT PLANS AND SPECIFICATIONS ON SITE AT ALL TIMES. IN ADDITION THE CONTRACTOR SHALL HAVE IN HIS POSSESSION THE CURRENT EDITION OF THE HRPDC SPECIFICATIONS.

18. CITY WILL ACCEPT SAND OR STONE TICKETS ONLY ON THE DAY THE MATERIAL IS DELIVERED TO THE JOB SITE. TICKETS WILL NOT BE ACCEPTED WITH MONTHLY PAY ESTIMATE, **<u>NO EXCEPTIONS</u>**.

19. THE CONTRACTOR SHALL VERIFY TYPE OF MATERIAL, OUTSIDE DIAMETER AND LOCATION OF ALL PIPES BEING CONNECTED TO, IN ORDER TO INSURE PROPER FITTINGS ARE AVAILABLE AND TO MINIMIZE OUT OF SERVICE TIME FOR CONNECTIONS. ALL NECESSARY FITTINGS NEEDED TO MAKE CONNECTIONS SHALL BE CHECKED BY THE CITY'S INSPECTOR PRIOR TO ANY CONNECTION WORK.

20. ANY TIE-INS TO EXISTING LINES THAT WILL RESULT IN INTERRUPTION OF SERVICE TO ANY CUSTOMER MUST BE COORDINATED WITH THE CITY OF NORFOLK AS TO ACCEPTABLE TIME AND DURATION OF INTERRUPTION. SCHEDULED INTERRUPTIONS OF SERVICE (TIE-INS, ABANDONMENTS, ETC.) REQUIRE 3 DAYS ADVANCE NOTICE FOR A TRIAL SHUTDOWN. AN ADDITIONAL 3 DAYS ADVANCE NOTICE WILL BE REQUIRED FOR THE ACTUAL SHUTDOWN IF THE TRIAL SHUTDOWN IS SUCCESSFUL.

21. ALL TEES, BENDS, PLUGS AND VALVES SHALL BE PROVIDED WITH MECHANICAL THRUST RESTRAINT AND RESTRAINED TO PROPER LENGTH. PLUGS INSTALLED ON ACTIVE WATER MAINS SHALL BE RESTRAINED. ENDS OF EXISTING LINES TO BE ABANDONED SHALL BE CAPPED WATER-TIGHT.

22. MECHANICAL THRUST RESTRAINT SHALL BE USED ON ALL BENDS AND FITTINGS WHEN WATER MAINS ARE OFF-SET. WATER MAINS MAY BE ROLLED UNDER STORM DRAINS WITHOUT FITTINGS WHEN THE VERTICAL GRADE CHANGE IS 2 FEET OR LESS.

23. NO PIPE FOLD-INS SHALL BE USED ON WATER MAINS OR SEWER FORCE MAINS. SLEEVES WILL BE USED.

24. WHERE WATER MAINS PASS OVER SEWER MAINS, THEY MUST BE 18 INCHES ABOVE, OR THE SEWER MUST BE A 20 FOOT SECTION OF AWWA APPROVED PRESSURE PIPE. WHERE WATER LINES PASS BELOW SEWER, 18 INCHES OF CLEARANCE IS REQUIRED AND SEWER MUST BE CONSTRUCTED OF AWWA APPROVED PRESSURE PIPE (18 FOOT LONG PIECE MINIMUM) CENTERED ON WATER MAIN PIPE SECTION.

25. NEOPRENE PADS SHALL BE USED BETWEEN PROPOSED MAIN AND EXISTING. UTILITIES AT CROSSINGS WHERE THE VERTICAL CLEARANCE IS LESS THAN SIX (6) INCHES.

26. ALL SANITARY SEWER DUCTILE IRON PIPE SHALL BE LINED WITH PROTECTO 401 OR APPROVED EQUAL.

27. FOR WORK IN THE CITY OF NORFOLK RIGHT OF WAY, CONTACT 48 HOURS IN ADVANCE.

DIVISION OF TRANSPORTATION (PERMITS)	664-7300
DIVISION OF ENVIRONMENTAL STORM WATER	823-4000
DEPARTMENT OF PARKS AND URBAN FORESTRY	823-4023
CONSTRUCTION PERMITS	664-6565

28. THE CONTRACTOR SHALL BE RESPONSIBLE FOR RESTORING DISTURBED AREAS TO THEIR ORIGINAL CONDITION. ANY UTILITY WORK REQUIRED TO BE PERFORMED OUTSIDE CITY RIGHT OF WAY OR EASEMENTS SHALL BE COMPLETED BY A LICENSED PLUMBING CONTRACTOR, WITH APPROVED PLUMBING PERMIT. ALL WORK ON PRIVATE PROPERTY MUST BE COORDINATED WITH PARKS & URBAN FORESTRY PRIOR TO CONSTRUCTION. TRENCHES FOR PRIVATE PROPERTY SEWERS WILL NOT BE ALLOWED TO BE LEFT OPEN OVERNIGHT. NO EXCEPTIONS.

29. THE CONTRACTOR SHALL REPLACE ALL DAMAGED OR REMOVED SIDEWALKS DAILY. THE TEMPORARY SIDEWALK SHALL BE A MINIMUM OF 1" COLD MIX OVER COMPACTED SUBGRADE AND SLOPED TO PROVIDE POSITIVE DRAINAGE. THE PERMANENT SIDEWALK REPLACEMENT SHALL BE IN ACCORDANCE WITH CURRENT CITY STANDARDS AND SHALL BE REPLACED TO THE NEAREST JOINT. CRUSHED CONCRETE WILL NOT BE ALLOWED FOR TEMPORARY SIDEWALKS OR DRIVEWAYS.

30. THE CONTRACTOR SHALL PROVIDE TEMPORARY DRIVEWAY AND PARKING ACCESS FOR ALL ADJACENT PROPERTY OWNERS DURING PERIODS WHEN CONSTRUCTION IN THE AREA IS NOT IN PROGRESS. THE CONTRACTOR SHALL OBTAIN DRIVEWAY PERMITS FROM THE DEPARTMENT OF PUBLIC WORKS, TRAFFIC ENGINEERING, FOR ALL REQUIRED DRIVEWAY WORK.

31. THE CONTRACTOR SHALL NOTE THAT THERE MAY BE OTHER CONSTRUCTION IN THIS AREA. THE CONTRACTOR SHALL COOPERATE WITH THE CITY AND ANY OTHER CONTRACTORS OR UTILITY OWNERS TO PREVENT DELAYS TO EITHER PROJECT. IF THE CONTRACTOR NEEDS TO PERFORM WORK OUT OF SEQUENCE OR ADJUST HIS SCHEDULE TO ACCOMMODATE OTHER WORK IN THE PROJECT AREA, IT SHALL NOT BE THE BASIS OF A CLAIM FOR DELAY AGAINST THE CITY.

32. FLOWABLE FILL IS NOT AN APPROVED MATERIAL FOR USE IN THE CITY OF NORFOLK FOR BACKFILL WITHOUT PRIOR APPROVAL. THE SELECT MATERIAL AND No. 21A STONE WILL BE IN ACCORDANCE WITH THE 2002 VDOT ROAD AND BRIDGE SPECIFICATIONS. FOR BACKFILL AROUND THE PIPE USE SELECT MATERIAL (SECTION 207) – TYPE I AND 20 CBR COMPACTION. FOR THE SUB BASE MATERIAL USE 6" MIN. VDOT No. 21A STONE IN ACCORDANCE TO SECTION 208.

33. RIGHT OF WAY EXCAVATION PERMITS ARE REQUIRED TO PERFORM SEWER AND WATER MAIN INSTALLATION AND ALL APPURTENANCES. PLEASE CONTACT THE RIGHT OF WAY PERMIT OFFICE AT 664-7306 OR AT "www.norfolk.gov/publicworks/row"

<u>SHEETING:</u>

34. CONTRACTOR TO USE VERTICAL TIGHT SHEETING FOR CUTS FIVE FEET OR DEEPER, UNLESS PERMISSION TO DO OTHERWISE IS GRANTED BY THE ENGINEER. SHEETING SHALL ALSO BE USED FOR CUTS BEHIND CURBS OR SIDEWALKS, AND BESIDE ROADWAYS FOR CUTS FIVE FEET OR LESS, AS REQUIRED BY THE ENGINEER. SHEETING SHALL BE USED TO PROTECT EXISTING UTILITIES OR OTHER STRUCTURES SUCH AS DRAINS, PIERS, POWER AND TELEPHONE POLES, ETC. SHEETING, WHEN USED, WILL BE DRIVEN 15 INCHES OR MORE BELOW PIPE INVERT, AND TOP OF SHEETING CAN NOT BE LESS THAN EXISTING GROUND ELEVATIONS, UNLESS OTHERWISE APPROVED BY THE ENGINEER. SHEETING WILL BE CUT OFF AND LEFT IN PLACE AS THE ENGINEER MAY DIRECT. PAYMENT FOR SHEETING LEFT IN PLACE WILL BE PAID ON A UNIT BASIS OF 1,000 BOARD FEET MEASUREMENT, TO BE CHECKED BY CONTRACTOR AND VERIFIED BY THE ENGINEER. ANY QUANTITY LESS THAN THE UNIT PRICE WILL BE PAID FOR TO THE CLOSEST FULL 100 BOARD FOOT MEASUREMENT.

<u>HOUSE TAPS:</u>

35. SEWER LATERALS SHALL BE EXTENDED TO PROPERTY LINES BY CONTRACTOR WHERE DIRECTED BY THE ENGINEER.

36. PRIVATE SERVICE LATERALS BEING REPLACED FROM THE PROPERTY LINE CLEANOUT TO THE BUILDING SHALL BE INSTALLED BY A LICENSED PLUMBING CONTRACTOR APPROVED BY THE CITY.

37. CONTRACTOR IS RESPONSIBLE FOR LOCATING ALL HOUSE SERVICE LINES (WATER AND SEWER). CONTRACTOR SHALL NOT DEPEND ON CITY FORCES TO LOCATE SERVICE LINES WHEN IT IS REQUIRED TO RELOCATE WATER METERS, AND SHALL BE RESPONSIBLE FOR ALL TIE-INS OF HOUSE LINES TO NEW METERS.

38. SANITARY SEWER LATERAL LOCATIONS SHOWN ON THE PLANS ARE APPROXIMATE ONLY AND ARE NOT GUARANTEED. WHERE LATERAL REPLACEMENTS ARE SHOWN OR REQUIRED BY THE ENGINEER SUCH SHALL BE REPLACED AS FOLLOWS:

    A. PUBLIC PROPERTY (RIGHT OF WAY): 4 INCH SDR 26 FROM THE SANITARY SEWER MAIN TO THE PROPERTY LINE CLEANOUT FOR SINGLE FAMILY OR DUPLEX DWELLINGS AND 4 OR 6 INCH SDR 26 FOR COMMERCIAL AND MULTIPLE DWELLING UNITS TO BE INSTALLED BY THE CONTRACTOR. IF MAIN IS OTHER THAN SDR 26 PIPE, LATERAL PIPE SHALL MATCH TYPE OF PIPE USED FOR MAIN. 6" LATERALS REQUIRE SQUARE CLEAN OUT BOXES AT THE PROPERTY LINE.

    B. PRIVATE PROPERTY; SEWER LATERAL PIPE ON PRIVATE PROPERTY SHALL COMPLY WITH THE PLUMBING CODE. NEW PROPERTY LINE CLEANOUTS SHALL BE INSTALLED. THE PRIVATE PROPERTY LATERAL, INCLUDING PRIVATE CLEANOUT(S), SHALL BE INSTALLED BY A LICENSED PLUMBER. REROUTING WILL BE ALLOWED SUBJECT TO THE APPROVAL OF THE ENGINEER. THE CONTRACTOR IS RESPONSIBLE FOR LOCATING ALL SANITARY SEWER LATERALS (PUBLIC AND PRIVATE) AND <u>SHALL NOT</u> DEPEND ON CITY FORCES TO LOCATE SUCH.

39. ALL EXISTING WATER SERVICES WITHIN THE CITY RIGHT OF WAY WHICH ARE CONNECTED TO WATER MAINS ABANDONED UNDER THIS CONTRACT SHALL BE REPLACED. SERVICE REPLACEMENT SHALL BE FROM THE NEW MAIN TO THE EXISTING METER AND SHALL INCLUDE TAPPING SADDLE (4" PVC ONLY), CORPORATION STOP, COPPER TUBING AND METER STOP. IN ADDITION, EMPTY METER BOXES IN FRONT OF BUILDABLE LOTS SHALL BE PROVIDED WITH SERVICE REPLACEMENT. WATER SERVICES TO BE BORED UNLESS DIRECTED BY THE ENGINEER.

<u>SANITARY AND WATER SERVICES:</u>

40. THE LOCATIONS OF EXISTING AND/OR PROPOSED SEWER LATERALS, PRIVATE PROPERTY LINE CLEANOUTS AND WATER METER RELOCATIONS SHOWN ON THE DRAWINGS ARE APPROXIMATE, BASED ON CURRENT RECORDS AND PRELIMINARY FIELD INVESTIGATIONS. THE CONTRACTOR SHALL BE RESPONSIBLE FOR LOCATING ALL EXISTING SEWER LATERAL AND WATER SERVICE CONNECTIONS AT THE MAIN, CLEANOUT BOXES, AND WATER METER BOXES, (WHERE APPLICABLE) <u>AND AT THE RESIDENCE PRIOR TO COMPLETING ANY REHAB OR REPLACEMENT WORK.</u> ONCE ALL EXISTING AND ACTIVE SEWER AND WATER CONNECTIONS HAVE BEEN LOCATED, THE CONTRACTOR MUST TOUR THE JOB SITE WITH THE ENGINEER, PLUMBER, AND CITY FORESTER TO DETERMINE THE LOCATION/RELOCATION OF EXISTING SEWER TAPS, LATERAL ALIGNMENTS, METER RELOCATIONS, HAND DIG ZONES, AND EQUIPMENT CLEARANCE PRUNING REQUIREMENTS. WHERE IN THE SOLE OPINION OF THE CITY FORESTER, EXCAVATION WITH A TRENCHER, BACKHOE OR OTHER MECHANICAL EQUIPMENT WITHIN THE CRITICAL ROOT ZONE WOULD LIKELY RESULT IN EXCESSIVE ROOT DAMAGE, HAND DIGGING WILL BE REQUIRED. WHERE FEASIBLE, NEW SERVICES WILL BE PLACED IN A LOCATION WHICH WILL LEAST IMPACT TREE ROOTS AND FACILITATE UTILITY INSTALLATION. <u>THERE SHALL BE NO SANITARY OR WATER SERVICE REPLACEMENTS OR TAP CONNECTIONS PERFORMED AT ANY LOCATION WHERE SERVICE/TAP LOCATIONS HAVE NOT BEEN JOINTLY REVIEWED BY THE ENGINEER, CONTRACTOR, PLUMBER, AND CITY FORESTER, AND APPROVED BY THE ENGINEER.</u> HAND DIGGING WILL BE PERFORMED AT NO ADDITIONAL COST TO THE CITY.

41. THE CONTRACTOR SHALL BE RESPONSIBLE FOR GRADING AND LANDSCAPING AROUND SANITARY SEWER CLEANOUTS WHEN SERVICES ARE INSTALLED. THE CONTRACTOR SHALL BE RESPONSIBLE FOR GRADING AND LANDSCAPING AROUND METER BOXES WHEN SERVICES ARE INSTALLED.

42. IF ABANDONED WATER MAIN IS IN CONFLICT WITH NEW SEWER LATERAL, THE ABANDONED MAIN IS TO BE CUT AND PLUGGED AT NO ADDITIONAL COST TO THE CITY.

43. CONTRACTOR SHALL COORDINATE INSTALLATION OF NEW WATER AND SEWER CONNECTIONS WITH THE ABANDONMENT OF EXISTING WATER AND SEWER MAINS. WATER AND SEWER SERVICE SHALL BE MAINTAINED TO ALL RESIDENCES AT ALL TIMES.

44. ALL EXISTING WATER METERS ARE ASSUMED TO BE 5/8" UNLESS OTHERWISE NOTED. CONTRACTOR TO VERIFY METER SIZES BEFORE DISCONNECTING. ALL SERVICE LINE AND METERS NOTED FOR REPLACEMENT SHALL BE REPLACED WITH SAME AS EXISTING SIZE.

45. <u>OPEN TRENCH URBAN FORESTRY INSPECTIONS</u> – ALL AREAS DESIGNATED BY THE CITY FORESTER FOR HAND DIGGING REQUIRE INSPECTION BY PARKS & URBAN FORESTRY <u>PRIOR TO BACKFILLING</u>, TO ASSESS THE EXTENT OF ROOT LOSS OR DAMAGE. THE CITY FORESTER MAY ALSO REQUIRE INSPECTION IN CERTAIN AREAS APPROVED FOR EXCAVATION WITH MECHANICAL EQUIPMENT. THE CONTRACTOR MUST PROVIDE PARKS & URBAN FORESTRY A MINIMUM 24 HOURS NOTICE OF ALL PLANNED EXCAVATIONS REQUIRING INSPECTION. ARRANGEMENTS FOR OPEN TRENCH INSPECTION CAN BE MADE BY CALLING DEAN BOWLES, CITY FORESTER, AT 823-4023 OR BY PROVIDING FAX NOTIFICATION (441-5141). SHOULD THE CONTRACTOR BACKFILL ANY OF THESE LOCATIONS PRIOR TO THE CITY FORESTER'S INSPECTION, HE MAY REQUIRE REMOVAL OF THE PLACED BACKFILL AT NO ADDITIONAL COST TO THE CITY.

<u>WORK WITHIN THE PAVEMENT:</u>

46. ALL AREAS DISTURBED BY CONSTRUCTION OR MOBILIZATION SHALL BE RESTORED TO THEIR ORIGINAL CONDITION, UNLESS SPECIFIED OTHERWISE. TEMPORARY PAVEMENT CUTS SHALL BE MAINTAINED WITH 6" OF VDOT No. 21A STONE OR RECYCLED ASPHALT PAVEMENT (RAP). THE CITY WILL ALLOW THE USE OF CRUSHED CONCRETE IN LIEU OF VDOT No. 21A OR RAP ON A CASE BY CASE BASIS. A GRADATION REPORT IS TO BE PROVIDED AS WELL AS A PROPOSAL FOR REDUCTION IN COST TO THE CITY. ONCE WE HAVE AN AGREEMENT, THE CONTRACTOR CAN MOVE FORWARD WITH THE USE OF CRUSHED CONCRETE. IN THE EVENT THE CITY FINDS MATERIALS IN THE CRUSHED CONCRETE THAT DO NOT COMPLY WITH THE GRADATION REPORT, THE CITY RESERVES THE RIGHT TO REQUIRE No. 21A FOR THE REMAINDER OF THE PROJECT. ALL MATERIALS DESIGNATED AS TEMPORARY SHALL BE COMPACTED AND WATERED ON A DAILY BASIS TO CONTROL DUST.

47. THE CONTRACTOR SHALL CONSTRUCT THE PROJECT IN ACCORDANCE TO THE PAVEMENT PHASING PLAN. AFTER THE PIPE HAS BEEN INSTALLED IN ANY ONE (1) PHASE, THE CONTRACTOR SHALL PERFORM ALL REQUIRED TESTING IN THE PRESENCE OF THE CITY INSPECTOR AND PERMANENTLY PAVE THE ENTIRE PHASE WITHIN ONE (1) MONTH OF COMPLETING THE PIPE INSTALLATION FOR THAT PHASE. DURING THIS TIME, THE CONTRACTOR WILL BE PERMITTED TO COMMENCE WORK IN ONE (1) SUBSEQUENT PHASE; HOWEVER, UNDER NO CIRCUMSTANCE SHALL THE PREVIOUS PHASE REMAIN UNPAVED BEYOND THE ABOVE MENTIONED ONE (1) MONTH PERIOD. COMMENCING WORK IN ADDITIONAL SUBSEQUENT PHASES WILL NOT BE PERMITTED UNTIL PERMANENT PAVING WITHIN THE INITIAL PHASE IS COMPLETED. THEREFORE, THE CONTRACTOR SHALL NOT COMMENCE WORK WITHIN A THIRD SUBSEQUENT PHASE WHILE PAVING IN ANY TWO (2) PHASES REMAINS TO BE COMPLETED. IF THE CONTRACTOR ELECTS TO DIVERT FROM THE CONSULTANTS PHASED PAVING PLAN, THE USE OF 3 INCHES OF BM-25 WITH MINIMUM 6 INCHES OF No. 21A STONE SHALL SUFFICE TO MEET THE ABOVE MENTIONED CONSTRAINTS ONLY IF THE FOLLOWING REQUIREMENTS ARE FULFILLED. THE CONTRACTOR SHALL TEMPORARILY PAVE THE PAVEMENT CUTS WITH BM-25 WITHIN TWO (2) MONTHS OR TWO (2) BLOCKS, WHICHEVER COMES FIRST. THE INSTALLATION AND REMOVAL OF THIS TEMPORARY PAVEMENT SHALL BE PERFORMED AT THE CONTRACTORS SOLE EXPENSE AND BEAR NO ADDITIONAL COST TO THE CITY.

48. ALL ROADWAY CUTS SHALL BE BACKFILLED ONLY WITH SUITABLE SUBBASE MATERIAL, AND MECHANICALLY TAMPED IN NO MORE THAN 6" LIFTS. BACKFILL SHALL BE PLACED AND COMPACTED IN ACCORDANCE WITH SECTION 308 OF THE VDOT ROAD AND BRIDGE SPECIFICATIONS, LATEST EDITION. THE CITY MAY, AT ANY TIME, REQUIRE TESTING TO ENSURE COMPLIANCE WITH THE SPECIFICATIONS OF THIS CONTRACT. ALL TESTS WILL BE CONDUCTED BY A RECOGNIZED TESTING LABORATORY SELECTED BY THE CITY, QUALIFIED IN THE FIELD OF THE MATERIALS TO BE TESTED. ALL TESTS WILL BE CONDUCTED IN ACCORDANCE WITH VDOT'S "MANUAL FOR VIRGINIA TEST METHODS" (CURRENT EDITION AS REVISED). PAYMENT FOR ALL TESTS WILL BE IN ACCORDANCE WITH THE FOLLOWING:
A) THE COST OF ALL TESTS FAILING TO MEET THE MINIMUM REQUIREMENTS WILL BE BORNE BY THE CONTRACTOR.
B) THE COST OF ALL TESTS THAT EITHER MEET OR EXCEED THE MINIMUM REQUIREMENTS SHALL BE BORNE BY THE CITY.

49. ARTERIAL STREETS – AVERAGE DAILY TRAFFIC OVER 15,000 VEHICLES PER DAY. ARTERIAL STREETS ARE THOSE IN THE CITY DESIGNATED AS "MAJOR THOROUGHFARES." BEING ESSENTIAL TO THE SAFE MOVEMENT OF THE MAJORITY OF CITIZENS, THESE STREETS REQUIRE STRICTER REGULATIONS TO MAINTAIN THE ORDERLY AND SAFE FLOW OF TRAFFIC. THEREFORE, NO WORK WILL BE PERFORMED ON ARTERIAL STREETS DURING THE PEAK TRAFFIC HOURS OF 6:00 A.M. TO 9:00 A.M. AND 3:30 P.M. TO 6:00 P.M. (MONDAY THROUGH FRIDAY ONLY), EXCEPT EMERGENCY WORK TO RESTORE SERVICES. LANE CLOSURES WILL BE RESTRICTED TO THE WORKING LANE ONLY AND TWO-WAY TRAFFIC WILL BE MAINTAINED AT ALL TIMES, UNLESS OTHERWISE AUTHORIZED BY THE DIRECTOR OF PUBLIC WORKS OR HIS DESIGNEE. <u>WORK IN XXXXXXXXXXXXXXX AVE. WILL BE ALLOWED BETWEEN THE HOURS OF X:XXAM AND X:XXPM.</u>

50. ARTERIALS SHALL BE OPENED TO TRAFFIC EACH NIGHT WITH ALL OPENINGS COVERED BY A ROAD PLATE OR A TEMPORARY ASPHALT PATCH BEFORE LEAVING THE SITE. THE PERMANENT ASPHALT PATCH SHALL BE PLACED THE SAME DAY THE WORK IS COMPLETED FOR MINOR PROJECTS AND WITHIN FIFTEEN (15) CALENDAR DAYS OF COMPLETION FOR MAJOR PROJECTS, UNLESS OTHERWISE DIRECTED. WHEN NOTIFIED BY THE CITY OF AN UNSAFE OPENING, THE RESPONSIBLE PARTY SHALL RESPOND AND REPAIR SAID PATCH WITHIN FOUR (4) HOURS.

51. COLLECTOR STREETS – AVERAGE DAILY TRAFFIC FROM 5000 TO 15,000 VEHICLES PER DAY (SEE ATTACHMENT C): THESE ARE ALL STREETS WHICH CONNECT RESIDENTIAL STREETS TO ARTERIALS (60'-80' RIGHTS-OF-WAY), WITH TWO LANES OF ALTERNATING TRAFFIC WITH PARKING ON BOTH SIDES OR FOUR LANES OF ALTERNATING TRAFFIC (SEE ATTACHED LISTING). THEREFORE, NO WORK WILL BE PERFORMED ON COLLECTOR STREETS DURING THE PEAK TRAFFIC HOURS, 6:00 A.M. TO 9:00 A.M. AND 3:30 P.M. TO 6:00 P.M. (MONDAY THROUGH FRIDAY ONLY), EXCEPT EMERGENCY WORK TO RESTORE SERVICES. MAIN SUBDIVISION COLLECTORS ARE ESPECIALLY CRITICAL. TWO-WAY TRAFFIC SHALL BE MAINTAINED AT ALL TIMES, UNLESS OTHERWISE AUTHORIZED BY THE DIRECTOR OF PUBLIC WORKS OR HIS DESIGNEE.

52. ALL UTILITY CUTS IN COLLECTOR STREETS SHALL BE FILLED EACH NIGHT AND COVERED BY A TEMPORARY ASPHALT PATCH IF COMPLETED TOO LATE FOR A PERMANENT ASPHALT REPAIR. THE REPAIR SHALL RECEIVE A PERMANENT ASPHALT PATCH AS SOON AS POSSIBLE BUT NO LATER THAN FIVE (5) CALENDAR DAYS AFTER WORK COMPLETION FOR MINOR PROJECTS, AND WITHIN FIFTEEN (15) CALENDAR DAYS FOR MAJOR PROJECTS, UNLESS OTHERWISE DIRECTED. WHEN NOTIFIED BY THE CITY OF AN UNSAFE OPENING, THE RESPONSIBLE UTILITY CONTRACTOR SHALL RESPOND AND REPAIR SAID PATCH WITHIN FOUR (4) HOURS.

53. RESIDENTIAL STREETS – AVERAGE DAILY TRAFFIC UNDER 5,000 VEHICLES PER DAY: THESE ARE THOSE STREETS AND CUL-DE-SACS WHICH PROVIDE DIRECT ACCESS TO ADJACENT PROPERTY OR INDIVIDUAL HOMES, NORMALLY TWO ALTERNATING LANES IN A 50' RIGHT-OF-WAY. CONSTRUCTION HOURS SHALL BE LIMITED TO 7:30 A.M. TO 4:30 P.M., TO BE SENSITIVE TO NOISE IMPACTS ON SURROUNDING PROPERTIES (EMERGENCY WORK TO RESTORE SERVICES EXCLUDED). AT LEAST A SINGLE LANE SHALL BE PROVIDED FOR TWO-WAY TRAFFIC WITH A FLAGMAN AVAILABLE FOR CONTROL, UNLESS OTHERWISE AUTHORIZED BY THE DIRECTOR OF PUBLIC WORKS OR HIS DESIGNEE.

54. EXCAVATIONS IN RESIDENTIAL STREETS SHALL BE PROTECTED EACH NIGHT; ALL UTILITY CUTS SHALL BE MAINTAINED DAILY WITH 21A STONE, CRUSHED CONCRETE, CRUSHED ASPHALT, COLD MIX, OR PLANT MIX ASPHALT. THE PERMANENT ASPHALT REPAIR SHALL BE MADE AS SOON AS POSSIBLE BUT NO LATER THAN FIVE (5) DAYS AFTER WORK COMPLETION FOR MINOR PROJECTS AND WITHIN THIRTY (30) CALENDAR DAYS FOR MAJOR PROJECTS. WHEN NOTIFIED BY THE CITY OF AN UNSAFE OPENING, THE RESPONSIBLE PARTY SHALL RESPOND AND REPAIR SAID PATCH WITHIN FOUR (4) HOURS.

55. THE CITY RESERVES THE RIGHT TO EFFECT ANY REQUIRED REPAIRS, AND WARRANT FOR THE COLLECTION FOR ALL ASSOCIATED COSTS, WHERE NECESSITATED BY EMERGENCY CONDITIONS.

56. ALL TEMPORARY BULK WASTE CONTAINERS PLACED WITHIN THE RIGHT OF WAY REQUIRE A PERMIT FROM THE DIVISION OF RIGHT OF WAY 664-7306.

57. "NO LANE CLOSURES AND/OR WORK IN THE RIGHT OF WAY, INCLUDING GRADING, SIDEWALK, CURB AND GUTTER, AND DRIVEWAY APRON INSTALLATION WILL BE ALLOWED WITHOUT A PERMIT FROM THE DIVISION OF RIGHT OF WAY (664-7306). ALL TRAFFIC CONTROL SHALL COMPLY WITH THE CURRENT EDITION OF THE "MANUAL OF UNIFORM TRAFFIC CONTROL DEVICES" (MUTCD), THE "VIRGINIA WORK AREA PROTECTION MANUAL" AND THE CITY OF NORFOLK RIGHT OF WAY EXCAVATION AND RESTORATION MANUAL. ADDITIONAL CHARGES APPLY IF OFF-DUTY OFFICERS ARE REQUIRED. A LIST OF PERMIT FEES IS LOCATED AT www.norfolk.gov/publicworks/row"

58. THE CONTRACTOR WILL BE REQUIRED TO POST CASH, A CHECK, OR A SURETY BOND OR LETTER OF CREDIT TO EXCAVATE IN THE RIGHT OF WAY.

59. WHEN THE CONTRACTOR WORK REQUIRES THE SAWCUTTING AND/OR PARTIAL DEMOLITION AND/OR REMOVAL OF ANY SECTION OF AN EXISTING APRON OR SIDEWALK. THE CONTRACTOR WILL BE REQUIRED TO REMOVE SAID EXISTING APRON OR SIDEWALK AND REPLACE IT WITH A NEW MONOLITHIC APRON OR SIDEWALK. SIDEWALK SHALL BE REMOVED TO THE NEAREST JOINT. ALL CONCRETE IS TO BE SAW CUT. NO PATCHING WILL BE ALLOWED. COMMERCIAL APRONS SHALL BE REPLACED WITH AN APPROVED COMMERCIAL APRON. RESIDENTIAL APRON SHALL BE REPLACED WITH AN APPROVED RESIDENTIAL APRON(HS-207). SIDEWALKS SHALL BE REPLACED WITH AN APPROVED SIDEWALK DETAIL. CONTACT THE DIVISION OF RIGHT-OF-WAT PERMIT OFFICE FOR APPROVAL 664-7306. (ORDINANCE NO: 40,778)

60. WHEN A NEW APRON AND/OR SIDEWALK ARE INSTALLED, ALL NEW OR EXISTING UTILITY STRUCTURES SHALL BE INSTALLED AND/OR RELOCATED OUTSIDE THE AREA OF THE NEW APRON AND/OR SIDEWALK. A PERMIT AND INSPECTION ARE REQUIRED.

61. AS PART OF THE CONTRACTOR'S PERMIT APPLICATION TO WORK IN THE RIGHT OF WAY, THE CONTRACTOR MUST SUBMIT A MAP IDENTIFYING THE PROJECTS STORAGE AND LAY DOWN AREA. THE CITY DOES NOT ALLOW STORAGE, STAGING OR LAY DOWN AREAS WITHIN THE RIGHT OF WAY. CONTRACTORS ARE ENCOURAGED TO MAKE ARRANGEMENTS TO STORE MATERIALS AND LAY DOWN ON PRIVATE PROPERTY OR THEY MUST BE STORED WITHIN CONSTRUCTION SITE.

62. THE CONTRACTOR WILL BE REQUIRED TO SUBMIT A DETAILED TRAFFIC CONTROL PLAN (MOT) WITH THE CONTRACTOR'S PERMIT APPLICATION TO WORK IN THE RIGHT-OF-WAY. THE MOT SHALL BE A DRAWING OR AERIAL PHOTO WITH SITE SPECIFIC DETAILS. THESE SHALL INCLUDE BUT ARE NOT LIMITED TO: TRAFFIC SIGNS, DIRECTIONAL SIGNS, DESTINATION SIGNAGE, CHANNELIZING DEVICES, WATER-FILLED BARRIERS, PORTABLE MESSAGE BOARDS WITH MESSAGES TO BE DISPLAYED AND TIMES AND DURATIONS OF DISPLAYED MESSAGES. ADDITIONALLY THE MOT SHALL DISPLAY THE EXACT LOCATION OF ALL SIGNS AND/OR DEVICES INCLUDING SPACING FOR EACH SIGN AND/OR DEVICES, SPACING BEING APPROPRIATE FOR THE WORK ZONE LOCATION AND POSTED SPEED LIMITS. ALL MAINTENANCE OF TRAFFIC (MOT) PLAN SHALL CONFORM TO THE CURRENT ISSUE OF "THE VIRGINIA WORK AREA PROTECTION MANUAL" COPIES OR REPRODUCTIONS OF THE MOT THAT ARE INCLUDED WITH THE PROJECT DRAWINGS AND SPECIFICATIONS WILL NOT BE ACCEPTED WITH THE CONTRACTOR'S PERMIT APPLICATION. CONTRACTORS SHOULD CONSIDER THESE ITEMS WHEN BIDDING PROJECT FOR CONSTRUCTION.

63. ALL MISS UTILITY MARKINGS IN THE RIGHT-OF-WAY ARE REQUIRED TO BE ERADICATED AT THE COMPLETION OF THE PROJECT.

64. BEFORE WORK COMMENCES WHERE ANY LOOP DETECTOR IS BURIED IN THE ROADWAY, PLEASE CONTACT PANKAJ GUPTE (PG) Pankaj.gupte@norfolk.gov 664-7300 FOR LOOP DETECTOR DETAILS AND SPECIFICATIONS. IF LOOP DETECTORS ARE DAMAGED DURING CONSTRUCTION THE CONTRACTOR WILL BE RESPONSIBLE FOR REPAIRS AND RESTORATION OF THE LOOP DETECTORS AND ANY TRAFFIC CONTROL DEVICES.

65. THE CITY RESERVES THE RIGHT TO STOP WORK ON THE PROJECT IF THE SITE IS NOT BEING KEPT CLEAN AND PROPERLY MAINTAINED.

66. CLAIMS FOR DELAY TIME-ONLY EQUIPMENT WHICH IS BEING USED ON A DAILY BASIS CAN BE INCLUDED ON THE CONTRACTOR'S CLAIM FOR DELAY.

67. THE TAPPING MACHINE USED FOR TAPPING SLEEVES AND VALVES SHALL BE DISINFECTED PRIOR TO USE ON WATER MAINS.

68. AN UP TO DATE AS-BUILT AND PROGRESS SCHEDULE SHALL ACCOMPANY THE CONTRACTOR'S MONTHLY APPLICATION FOR PAYMENT. IF THESE ITEMS ARE NOT INCLUDED WITH THE INVOICE, THE INVOICE SHALL BE IMMEDIATELY RETURNED TO THE CONTRACTOR.

69. ALL MATERIALS PURCHASED FOR THIS PROJECT SHALL BE NEW AND HAVE BEEN MANUFACTURED WITH IN THE LAST TWO (2) YEARS OF THE DATE WHEN THE CONTRACT WAS EXECUTED.

70. ALL NIPPLE PIECES BETWEEN WATER MAIN AND FORCE MAIN FITTINGS AND VALVES SHALL BE CLASS 52 DUCTILE IRON.

71. ALL CURBS, SIDEWALKS, AND CONCRETE APRONS WHICH ARE REMOVED, SHALL BE REPLACED TO THE NEAREST JOINT.

72. CONTRACTOR'S MONTHLY INVOICES SHALL BE REVIEWED BY THE CITY'S INSPECTOR AND CONTRACTOR'S SUPERINTENDENT PRIOR TO SUBMISSION.

73. ALL PRODUCTS USED IN THE CONSTRUCTION AND MAINTENANCE OF THE WATER SYSTEM SHALL MEET THE DEFINITION OF "LEAD-FREE" AS DESCRIBED IN THE <u>REDUCTION OF LEAD IN DRINKING WATER ACT OF 2011</u>.

	CITY OF NORFOLK – DEPARTMENT OF UTILITIES STANDARD DETAILS	SCALE: NOT TO SCALE
DATE: 02/14	GENERAL NOTES	DRAWING NO. GEN 01

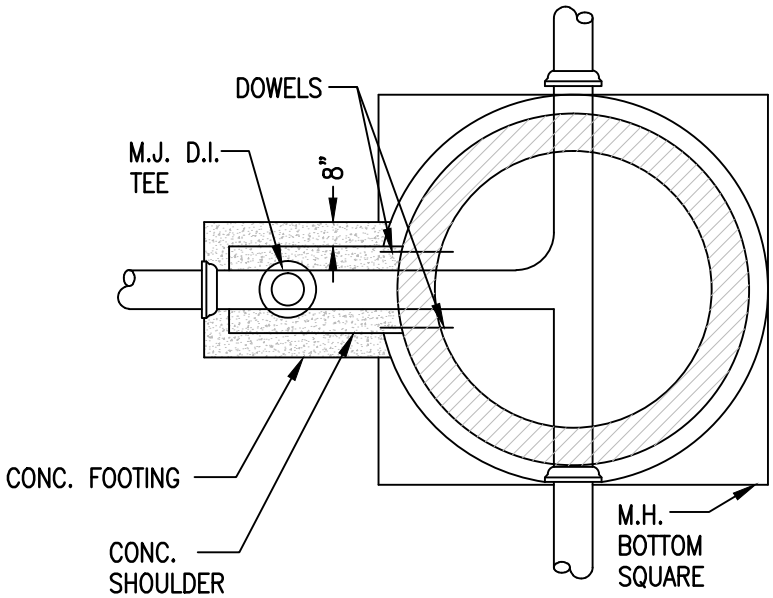

SECTION A–A

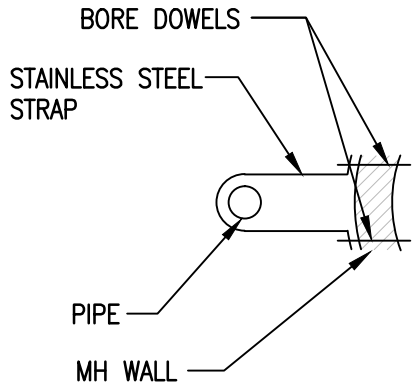

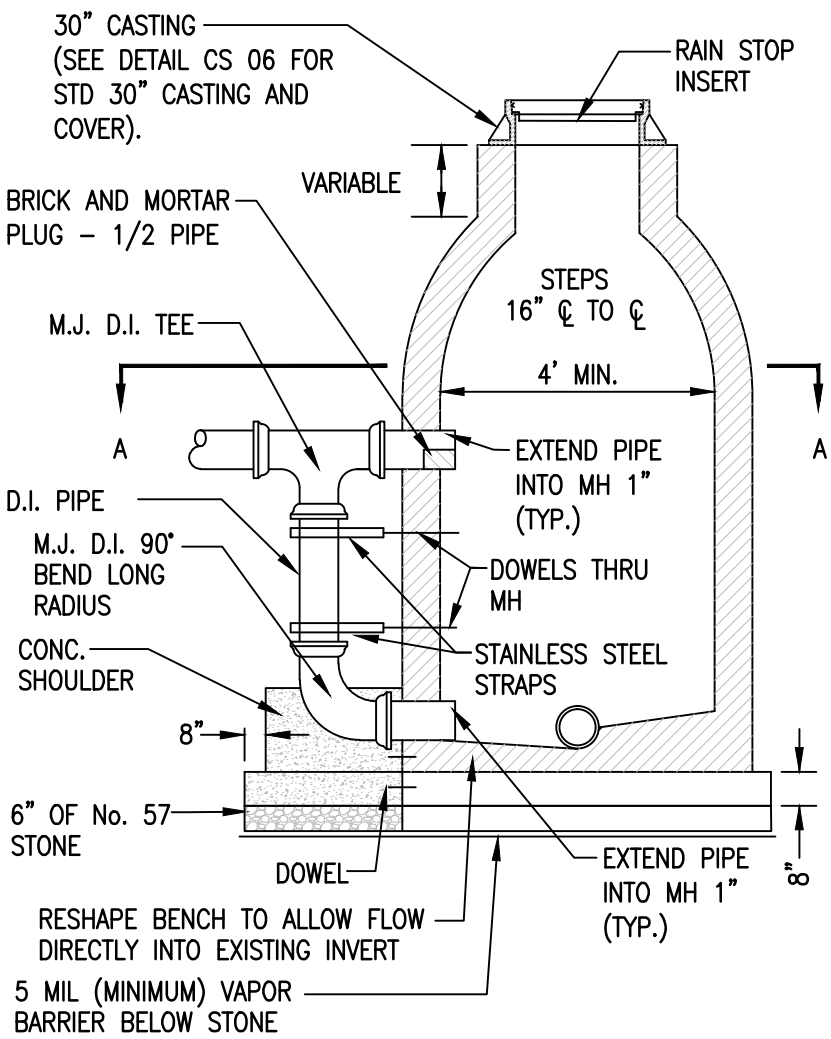

NOTES:

1. DI PIPE AND FITTINGS FOR DROP TO BE LINED WITH PROTECTO 401 OR APPROVED EQUAL.
2. ALL PIPE ENTRANCES INTO THE MANHOLES SHALL BE CORE BORED, MANHOLE BOOT AS PER ASTM C 923 ON EACH PIPE. VOIDS TO BE REPAIRED WITH NON–SHRINK GROUT. GROUTED AREAS SHALL BE PAINTED WITH BITUMINOUS COATING ON EXTERIOR.
3. DOWEL HOLES SHALL BE BORED, VOIDS SHALL BE REPAIRED WITH NON–SHRINK GROUT. GROUTED AREAS ON THE OUTSIDE OF THE MH WALL SHALL BE PAINTED WITH BITUMINOUS COATING.
4. ONE STAINLESS STEEL STRAP SHALL BE LOCATED 4" BELOW THE BELL OF THE TEE, ADDITIONAL STRAPS WILL BE PLACED AT 18" ON CENTER ON THE VERTICAL PIPE.

	CITY OF NORFOLK – DEPARTMENT OF UTILITIES STANDARD DETAILS	SCALE: NOT TO SCALE
DATE: 11/12	STANDARD D.I. DROP CONNECTION FOR EXISTING BRICK MANHOLE	DRAWING NO. CS 01

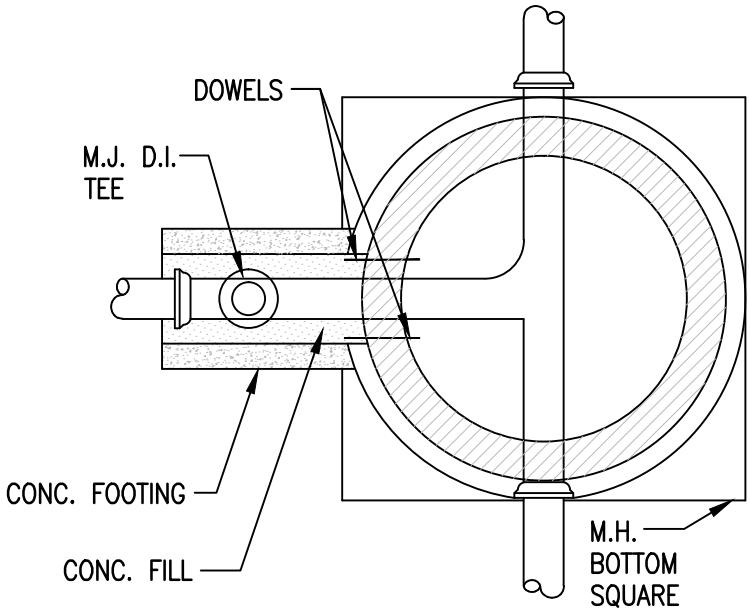

SECTION A–A

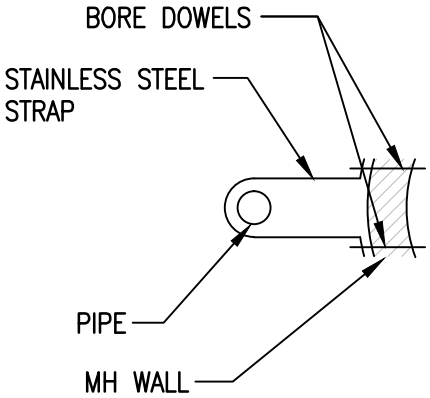

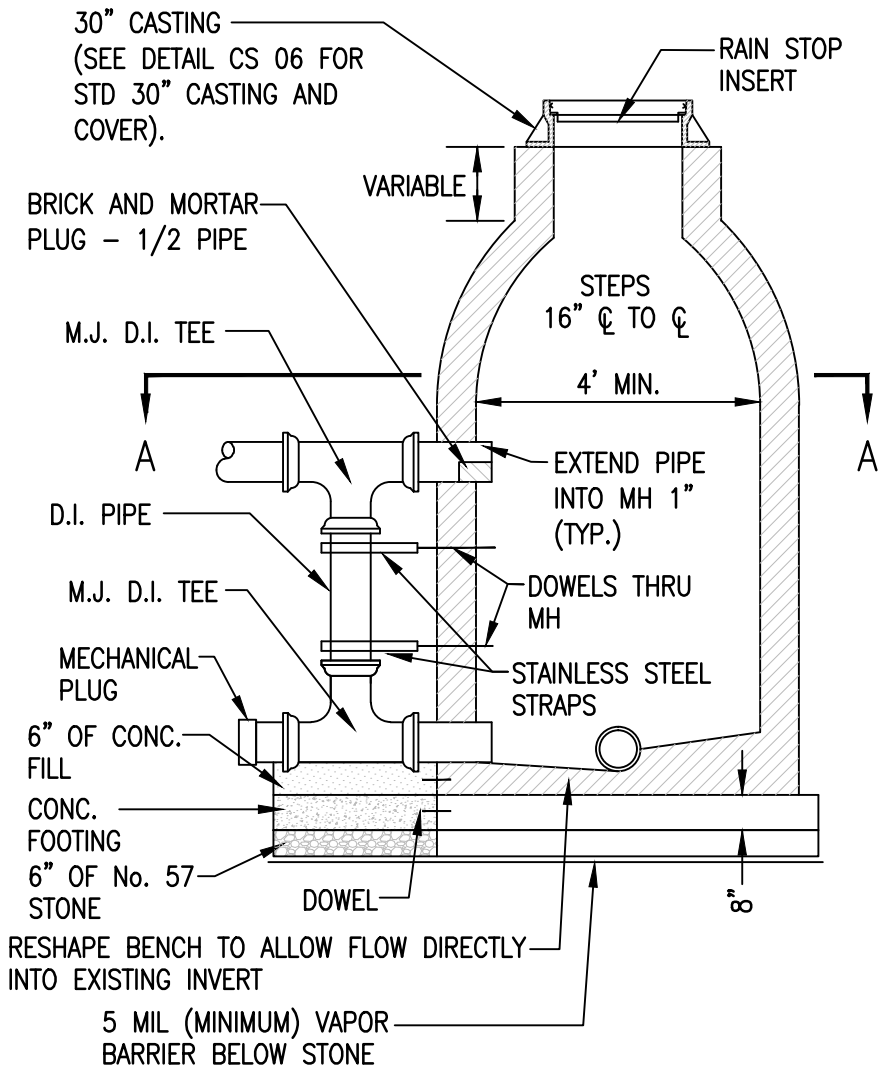

NOTES:

1. DI PIPE AND FITTINGS FOR DROP TO BE LINED WITH PROTECTO 401 OR APPROVED EQUAL.
2. ALL PIPE ENTRANCES INTO THE MANHOLES SHALL BE CORE BORED, MANHOLE BOOT AS PER ASTM C 923 ON EACH PIPE. VOIDS TO BE REPAIRED WITH NON–SHRINK GROUT. GROUTED AREAS SHALL BE PAINTED WITH BITUMINOUS COATING ON EXTERIOR.
3. DOWEL HOLES SHALL BE BORED, VOIDS SHALL BE REPAIRED WITH NON–SHRINK GROUT. GROUTED AREAS ON THE OUTSIDE OF THE MH WALL SHALL BE PAINTED WITH BITUMINOUS COATING.
4. ONE STAINLESS STEEL STRAP SHALL BE LOCATED 4" BELOW THE BELL OF THE TEE, ADDITIONAL STRAPS WILL BE PLACED AT 18" ON CENTER ON THE VERTICAL PIPE.

	CITY OF NORFOLK – DEPARTMENT OF UTILITIES STANDARD DETAILS	SCALE: NOT TO SCALE
DATE: 06/12	MODIFIED D.I. DROP CONNECTION FOR EXISTING BRICK MANHOLE	DRAWING NO. CS 01A

NOTES:

1. MH'S TO HAVE 8" WALL THICKNESS.
2. HARD SOUND COMMON BRICK TO BE LAID IN 1–3 CEMENT MORTAR. SHOVED JOINTS NOT TO EXCEED 3/8" THICK. EXTERIOR FACES TO BE PLASTERED WITH 1–2 CEMENT MORTAR & BITUMINOUS COATING.
3. NO HAND–MIXED CONCRETE WILL BE ALLOWED ON THE JOB. ONLY READY MIXED A4000 CONCRETE WILL BE USED.

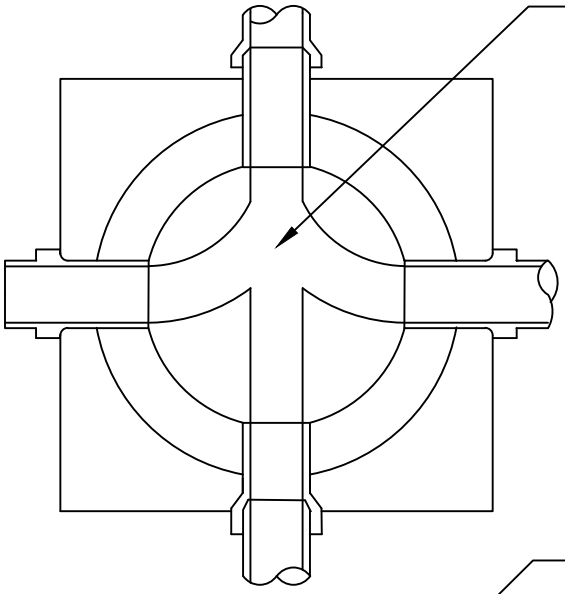

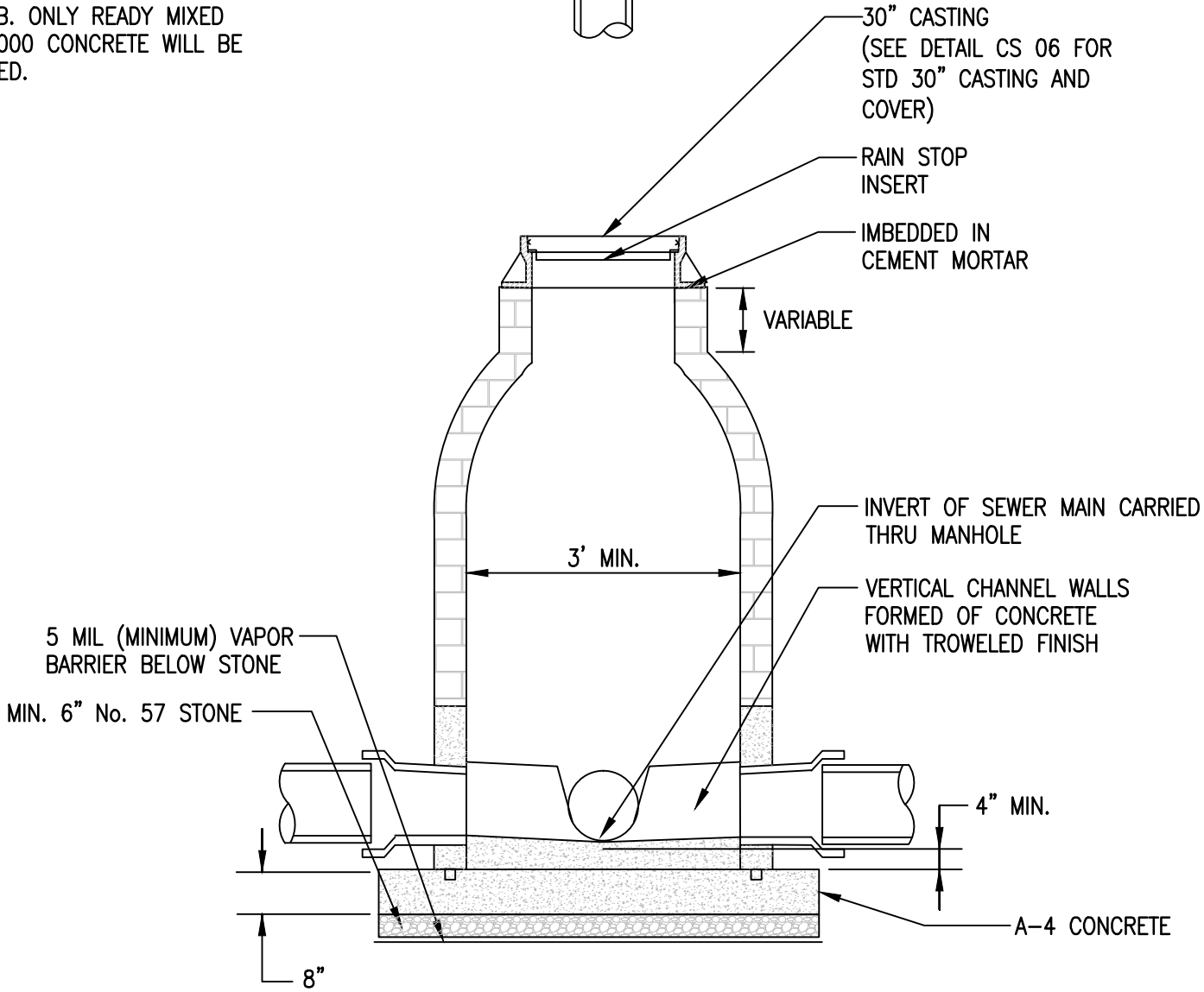

	CITY OF NORFOLK – DEPARTMENT OF UTILITIES STANDARD DETAILS	SCALE: NOT TO SCALE
DATE: 07/07	STANDARD BRICK M.H. USING D.I. PIPE 3 FEET DEEP OR LESS	DRAWING NO. CS 02

REQUIREMENTS:

1. MANHOLE SHALL MEET ALL REQUIREMENTS OF ASTM C478.

2. CONCRETE SHALL BE 4000 PSI COMPRESSIVE STRENGTH MINIMUM.

3. REINFORCING FABRIC SHALL MEET ASTM A185.

4. BASES SHALL BE EXTENDED MONOLITHIC TYPE.

5. MAX. HEIGHT FOR 48" M.H. SHALL NOT EXCEED 12'. WHEN THE MANHOLE IS OVER 12' DEEP, THE BOTTOM 6' (MINIMUM) SHALL BE 60" IN DIAMETER.

6. ALL MANHOLE WALLS SHALL RECEIVE INSIDE APPLICATION OF SIKAGARD HI-BILT OR APPROVED EQUAL APPLIED IN ACCORDANCE WITH MANUFACTURERS SPEC.

7. JOINTS, LIFT HOLES & CHIPS TO BE POINTED WITH NONSHRINK GROUT AND COATED WITH SIKAGARD HI-BILT OR APPROVED EQUAL ON INSIDE WALL, AND PAINTED WITH BITUMINOUS COATING ON OUTSIDE WALL.

8. BUTYL JOINT SEALANT SHALL MEET ALL REQUIREMENTS OF ASTM C443 OR APPROVED EQUAL.

9. MANHOLE STEPS SHALL BE AS PER CITY STANDARD CS 07.

10. STANDARD INVERT ELEVATION OF NO GREATER THAN 1.99' DIFFERENCE SHOULD BE DESIGN CRITERIA. IF EQUAL TO OR GREATER THAN 2' AN OUTSIDE DROP CONNECTION IS REQUIRED.

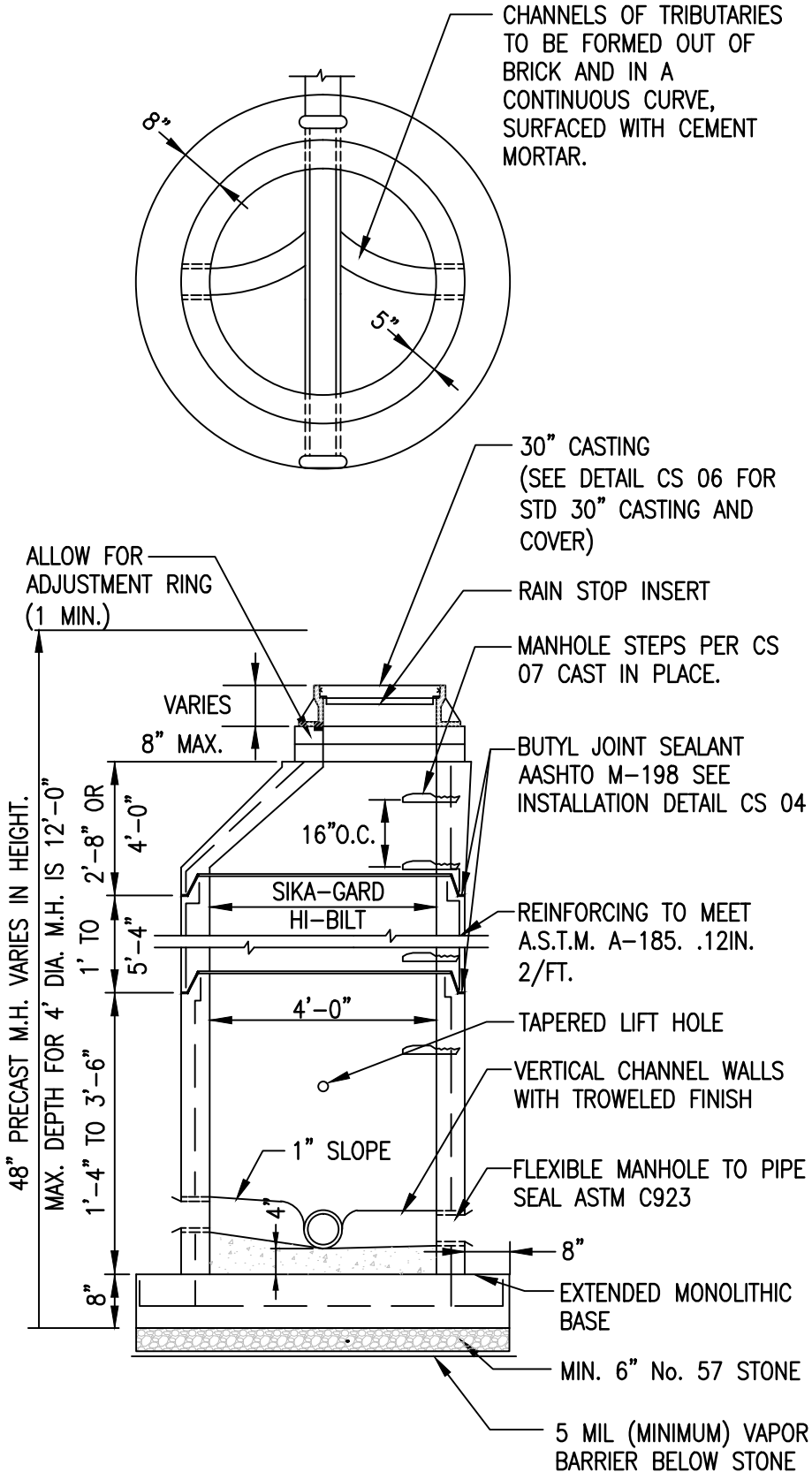

	CITY OF NORFOLK – DEPARTMENT OF UTILITIES STANDARD DETAILS	SCALE: NOT TO SCALE
DATE: 07/07	STANDARD PRECAST SEWER MANHOLE	DRAWING NO. CS 03

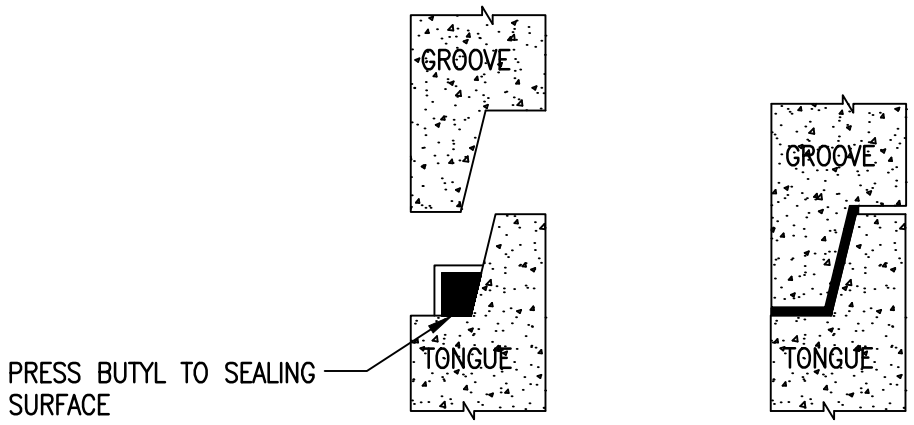

BUTYL JOINT SEALANT INSTALLATION

NOTE:

1. ALL OTHER CRITERIA TO BE THE SAME AS FOR CITY OF NORFOLK, VA. STANDARD PRECAST SEWER MANHOLE CS 03.
2. USE SEALANT AS MANUFACTURED BY PRESS SEAL GASKET CORPORATION OR APPROVED EQUAL.

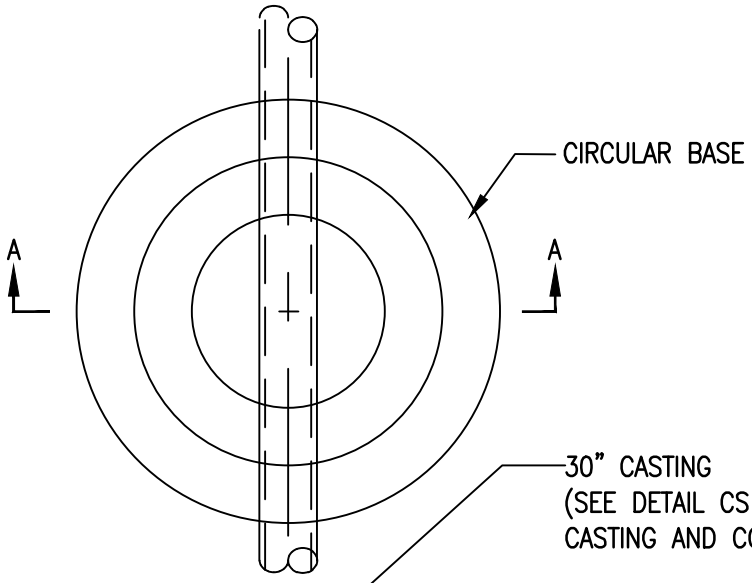

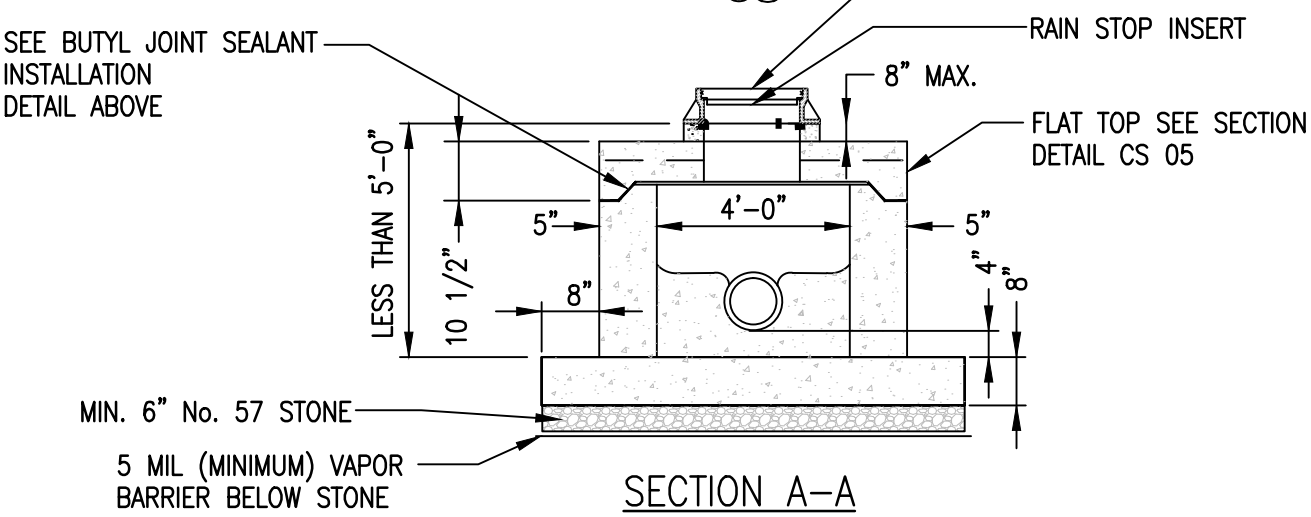

SECTION A–A

	CITY OF NORFOLK – DEPARTMENT OF UTILITIES STANDARD DETAILS	SCALE: NOT TO SCALE
DATE: 07/07	SHALLOW PRECAST SEWER MANHOLE FOR MANHOLES LESS THAN OR EQUAL TO 5'–0" (INVERT TO TOP OF CASTING) BUTYL JOINT SEALANT INSTALLATION	DRAWING NO. CS 04

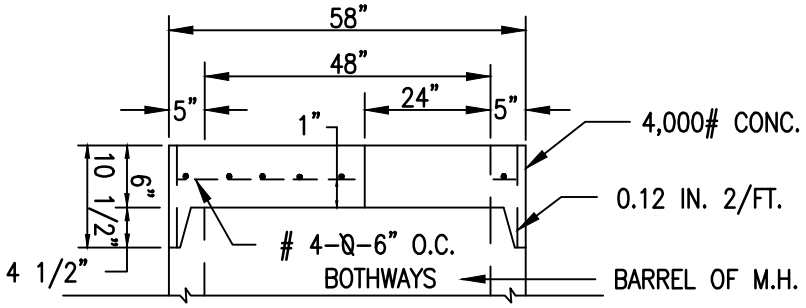

FLAT TOP SECTION A–A

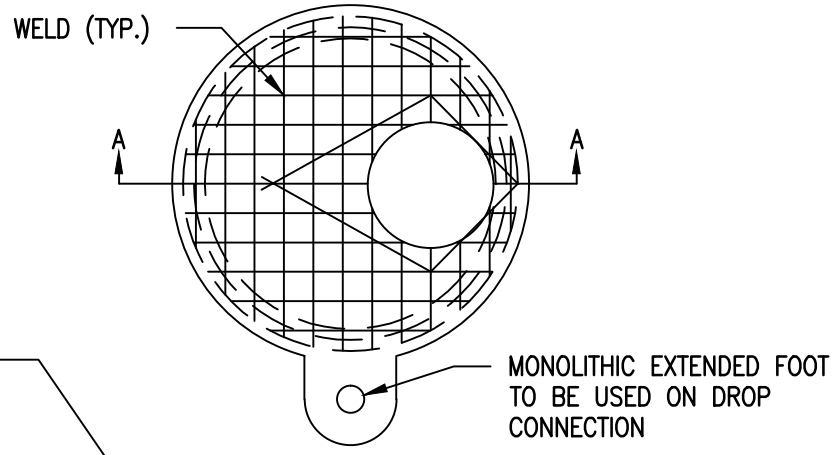

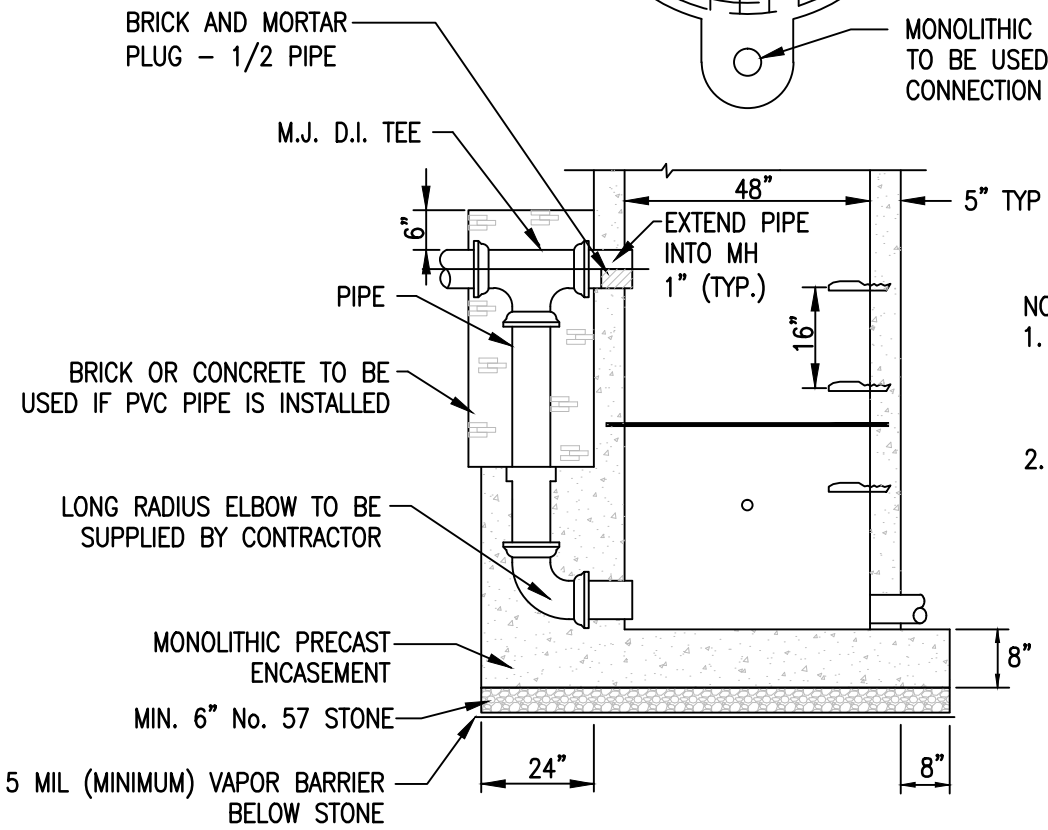

NOTES:

1. PLACEMENT OF DROP NOT TO CONFLICT WITH MANHOLE STEPS.
2. PROVIDE FLEXIBLE BOOT CONNECTION.

	CITY OF NORFOLK – DEPARTMENT OF UTILITIES STANDARD DETAILS	SCALE: NOT TO SCALE
DATE: 09/13	STANDARD PRECAST SEWER DROP MANHOLE	DRAWING NO. CS 05

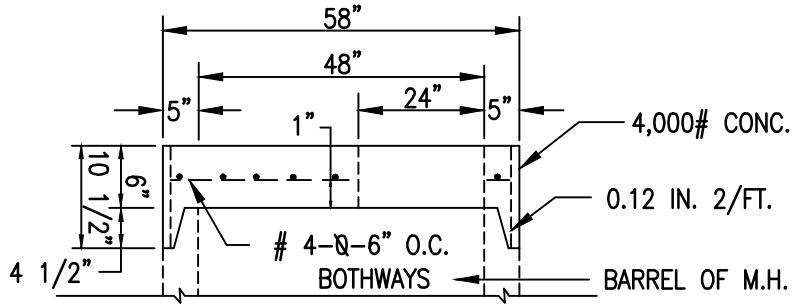

FLAT TOP SECTION A–A

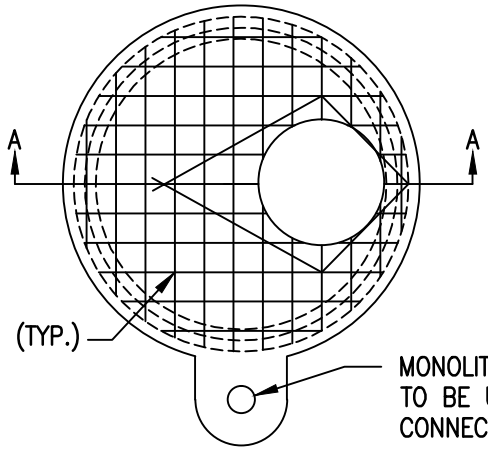

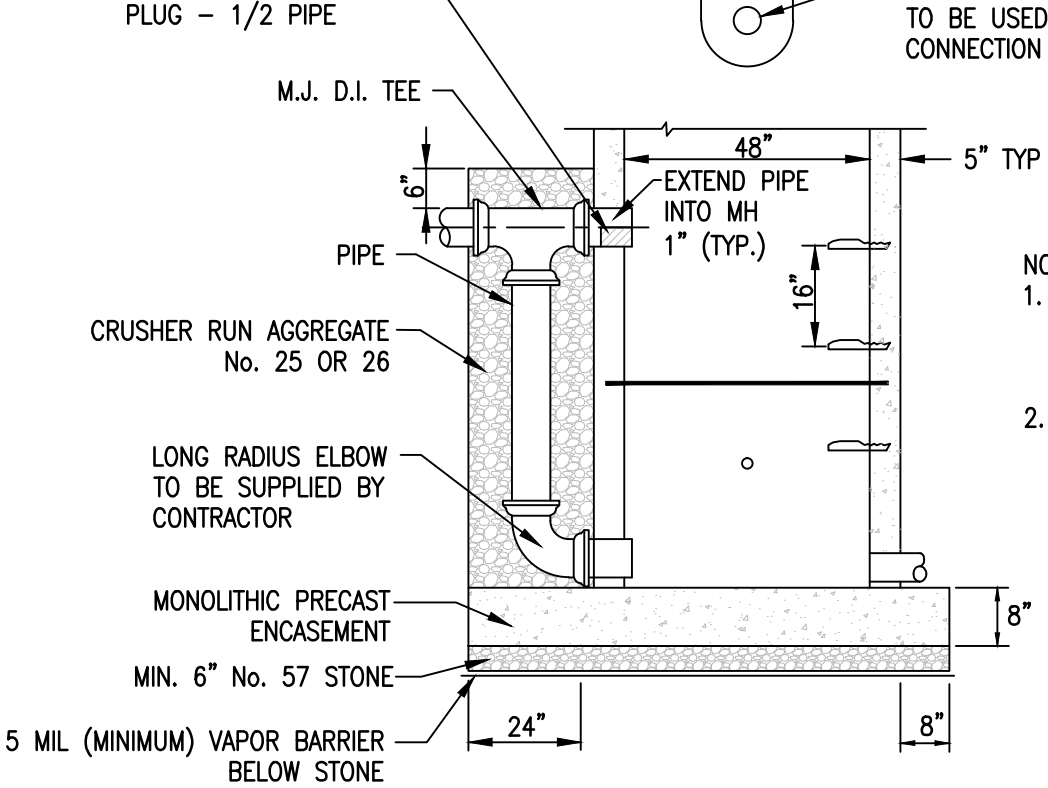

NOTES:

1. PLACEMENT OF DROP NOT TO CONFLICT WITH MANHOLE STEPS.
2. PROVIDE FLEXIBLE BOOT CONNECTION.

	CITY OF NORFOLK – DEPARTMENT OF UTILITIES STANDARD DETAILS	SCALE: NOT TO SCALE
DATE: 09/13	MODIFIED PRECAST SEWER DROP MANHOLE	DRAWING NO. CS 05A

NOTES:

1. LARGE LETTERS IN CENTER OF COVER SHALL BE SEWER OR AS SPECIFIED IN ORDER.
2. CAST IRON SHALL BE 35,000 P.S.I. ATSM A48 CLASS 35B
3. CASTING AND COVER IS TO BE MACHINED TO INSURE A FIRM TIGHT FIT.
4. RAIN STOP INSERT – OF 304 STAINLESS STEEL W/ NITRILE GAS RELIEF VALVE, 1" WEBBED NYLON HANDLE, AND CLOSED CELL NEOPRENE GASKET.

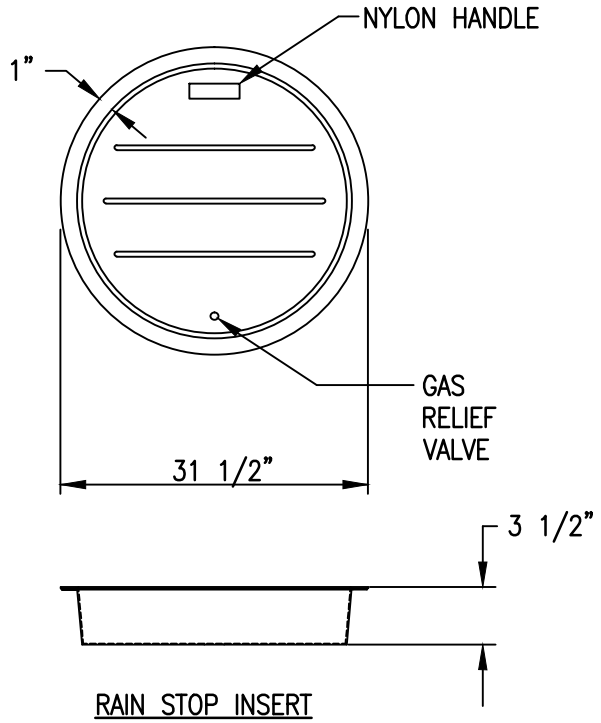

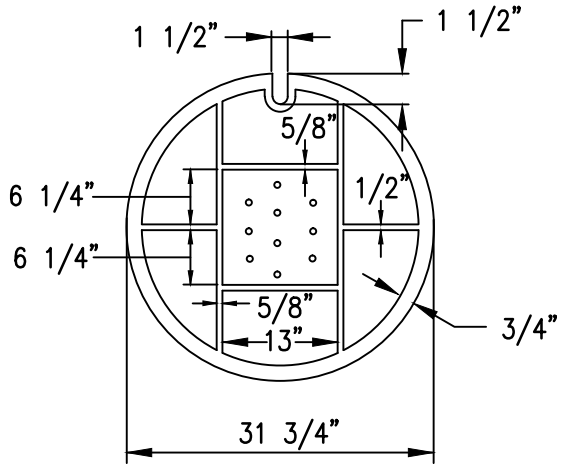

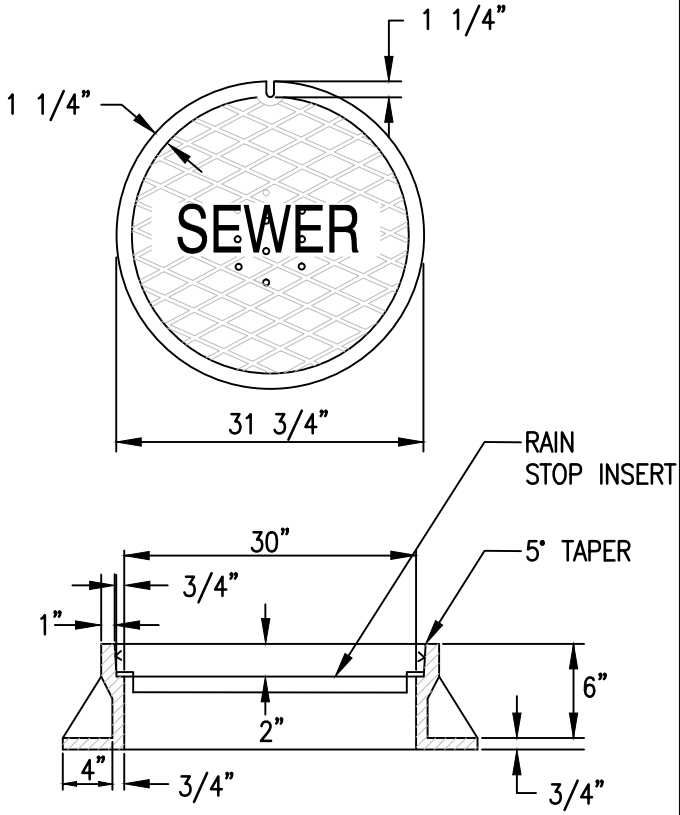

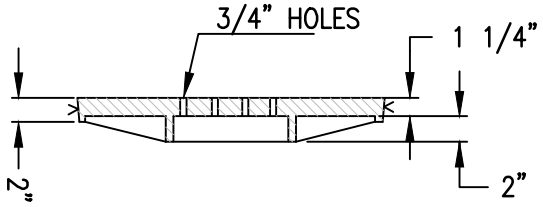

	CITY OF NORFOLK – DEPARTMENT OF UTILITIES STANDARD DETAILS	SCALE: NOT TO SCALE
DATE: 03/07	STANDARD 30" MANHOLE CASTING & COVER	DRAWING NO. CS 06

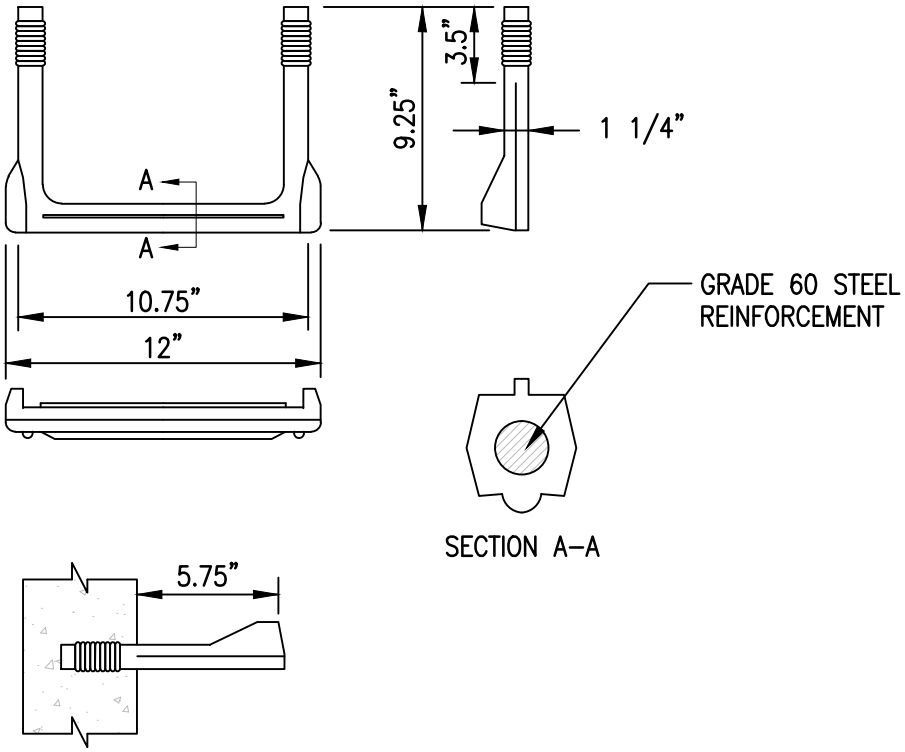

NOTE:

1. COPOLYMER POLYPROPYLENE WITH ½" GRADE 60 STEEL REINFORCEMENT AS MANUFACTURED BY MA INDUSTRIES PS1–PF OR AMERICAN STEP CO, INC ML–10 OR APPROVED EQUAL.

	CITY OF NORFOLK – DEPARTMENT OF UTILITIES STANDARD DETAILS	SCALE: NOT TO SCALE
DATE: 03/07	STEP FOR PRECAST MANHOLES	DRAWING NO. CS 07

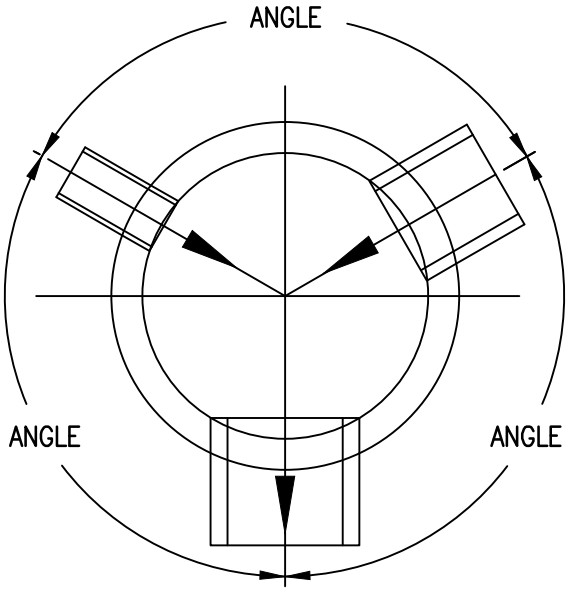

NOMINAL PIPE SIZE	48" DIAMETER MANHOLE					
	12"	15"	18"	21"	24"	27"
12"	59°	55°	70°	76°	80°	87°
15"		70°	75°	80°	85°	92°
18"			81°	87°	90°	98°
21"				93°	96°	105°
24"					100°	107°
27"						114°

NOMINAL PIPE SIZE	60" DIAMETER MANHOLE									
	12"	15"	18"	21"	24"	27"	30"	33"	36"	42"
12"	47°	50°	55°	60°	62°	66°	72°	78°	82°	105°
15"		55°	60°	63°	66°	71°	76°	81°	85°	110°
18"			63°	68°	70°	75°	80°	85°	90°	112°
21"				72°	75°	80°	85°	90°	95°	115°
24"					77°	81°	87°	95°	100°	118°
27"						85°	91°	97°	102°	125°
30"							95°	102°	105°	128°
33"								108°	110°	133°
36"									115°	140°
42"										160°

NOTES:

1. THE ABOVE ANGLES ARE TO BE MAINTAINED FOR THE STRUCTURAL INTEGRITY OF THE MANHOLES. SMALLER ANGLES MAY BE ALLOWED WITH PRIOR APPROVAL FROM THE DEPARTMENT.

2. FOR LARGER PIPE SIZES AND LARGER MANHOLES, SUBMIT DESIGN CALCULATIONS AND CERTIFICATION FROM THE PRECAST MANHOLE MANUFACTURER.

	CITY OF NORFOLK – DEPARTMENT OF UTILITIES STANDARD DETAILS	SCALE: NOT TO SCALE
DATE: 03/07	ALLOWABLE ANGLES FOR PRECAST MANHOLES	DRAWING NO. CS 08

NOTE:

1. CAST IRON TOPS & FRAMES SHALL BE SUFFICIENTLY TRUE TO A PLANE SURFACE, SO THAT TOPS WILL NOT ROCK.

2. RISER MATERIAL TO MATCH MAIN MATERIAL.

GENERAL SPECIFICATIONS:

1. CAST IRON FRAME AND COVER SHALL BE 35,000 PSI. ASTM A48

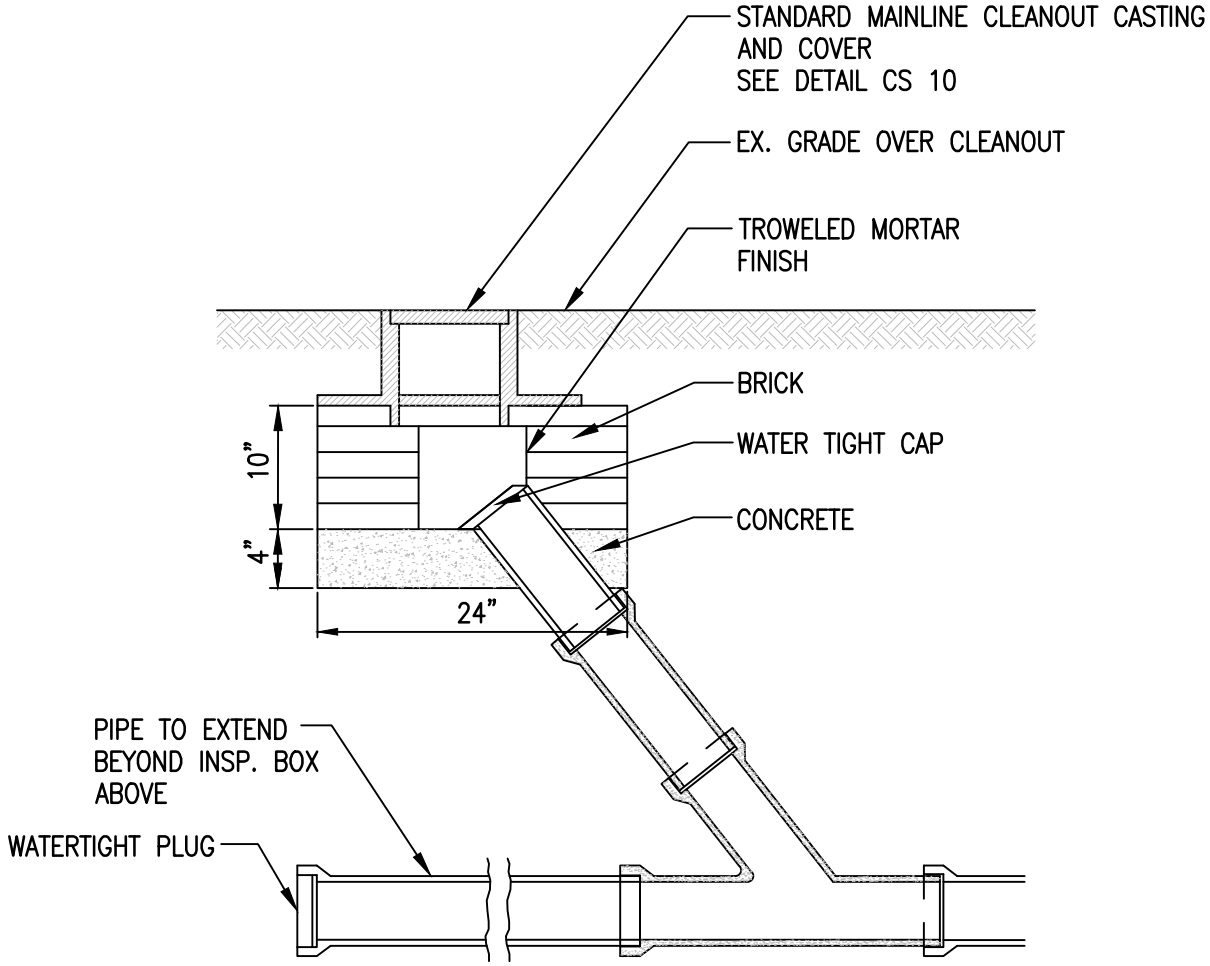

	CITY OF NORFOLK – DEPARTMENT OF UTILITIES STANDARD DETAILS	SCALE: NOT TO SCALE
DATE: 03/07	STANDARD MAINLINE CLEANOUT CONNECTION	DRAWING NO. CS 09

NOTE:

1. LETTER ON COVER SHALL BE "S".

GENERAL SPECIFICATIONS

1. CAST IRON SHALL BE 35,000 PSI
2. ASTM A48 CLASS 35B

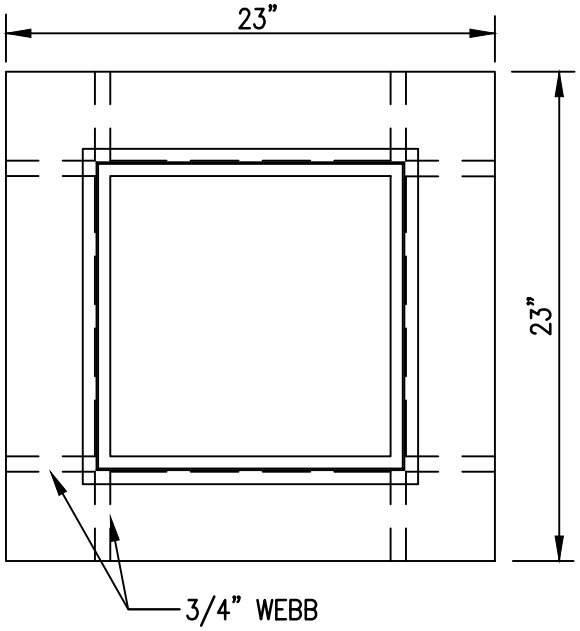

PLAN VIEW

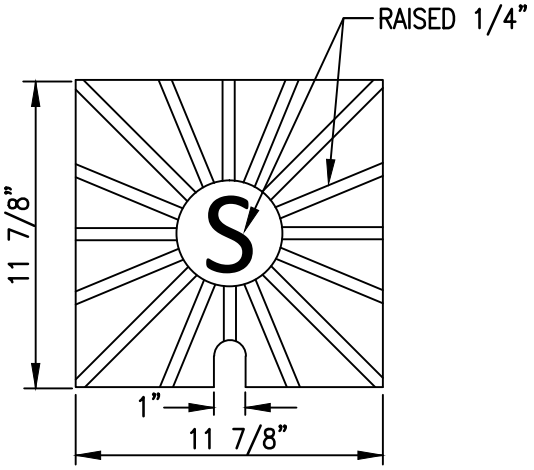

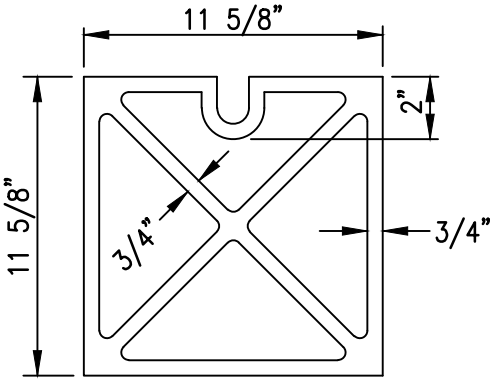

PLAN VIEW VALVE LID

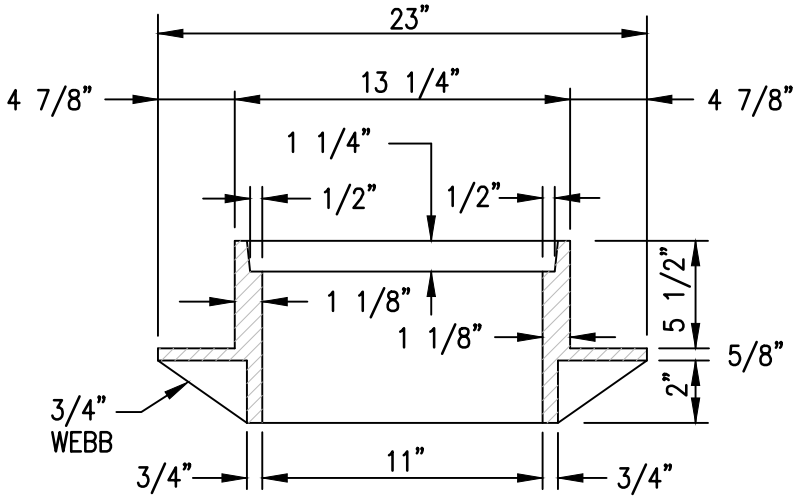

PROFILE

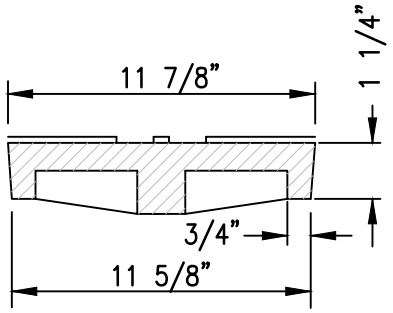

PROFILE

	CITY OF NORFOLK – DEPARTMENT OF UTILITIES STANDARD DETAILS	SCALE: NOT TO SCALE
DATE: 03/07	MAINLINE CLEANOUT CASTING AND COVER	DRAWING NO. CS 10

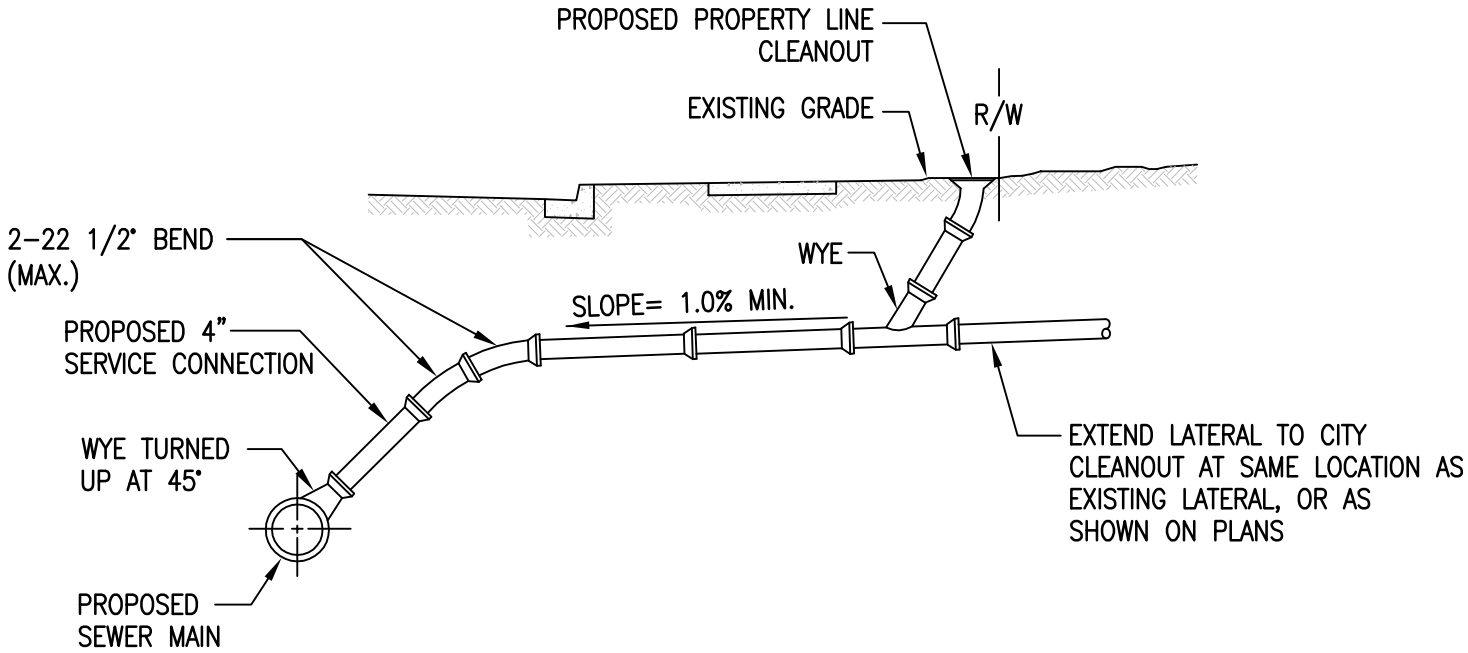

TYPICAL WYE/LATERAL LAYOUT

NOTES:

1. LOCATION OF Y, CLEANOUT, AND END OF PIPE MAY BE VARIED BY INSPECTOR IF NECESSARY BECAUSE OF UNUSUAL DEPTH OR CONDITIONS. D.I. MAIN REQUIRES WYE OR TEE IN COMPLIANCE WITH A.N.S.I. A 21.10 LATEST REVISION. LATERAL PIPING SHALL MATCH MAIN LINE PIPE.

2. WHERE CONTRACTOR IS RE-CONNECTING EXIST. SANITARY LATERALS TO MAIN LINE PIPING, 2-22 1/2° BENDS SHALL BE INSTALLED TO MAKE CONNECTION IF NECESSARY. CONTRACTOR WILL BE REQUIRED TO REMOVE & REPLACE AS MUCH OF THE EXISTING LATERAL NECESSARY TO ENSURE THAT THE PROPOSED CONNECTION IS MADE IN ACCORDANCE WITH THE DETAIL AT NO ADDITIONAL COST TO THE CITY, INCLUDING MISC. RIGHT OF WAY AND PRIVATE PROPERTY IMPROVEMENTS.

	CITY OF NORFOLK – DEPARTMENT OF UTILITIES STANDARD DETAILS	SCALE: NOT TO SCALE
DATE: 07/13	TYPICAL WYE/LATERAL LAYOUT AND PROPERTY LINE CLEANOUT	DRAWING NO. CS 11

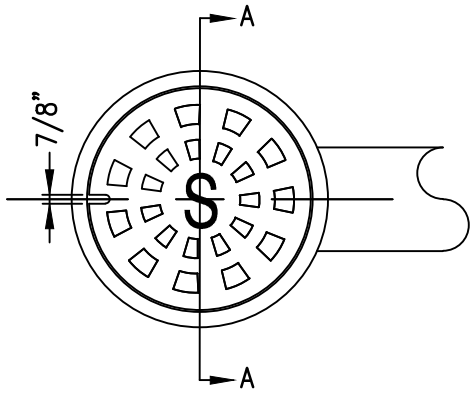

PLAN

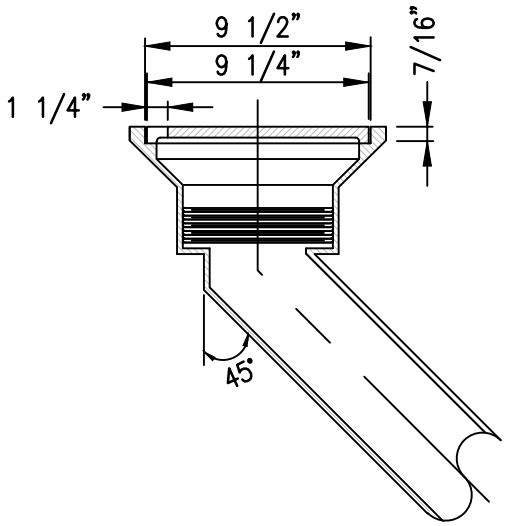

SECTION A–A

NOTE:

1. PROPERTY LINE CLEANOUT SHALL HAVE A THREADED LATERAL CLEANOUT BOX, MEET CAST IRON–ASTM A–48 CLASS–35B REQUIREMENTS, BE FINISH–ASPHALT COATED, AND HAVE AN AVERAGE WEIGHT OF 37 LBS AS MANUFACTURED BY CAPITAL FOUNDRY ITEM NO. VB–110T–C/O OR APPROVED EQUAL.

	CITY OF NORFOLK – DEPARTMENT OF UTILITIES STANDARD DETAILS	SCALE: NOT TO SCALE
DATE: 10/07	PROPERTY LINE CLEANOUT	DRAWING NO. CS 12

NOTES

1. PUMP CONNECTION SHALL HAVE BAUER FLANGE X-BALL QUICK DISCONNECT COUPLING PART NO. 100-7005 OR APPROVED EQUAL.

2. ALL PIPE AND FITTINGS TO BE LINED WITH PROTECTO 401 OR AN APPROVED EQUAL.

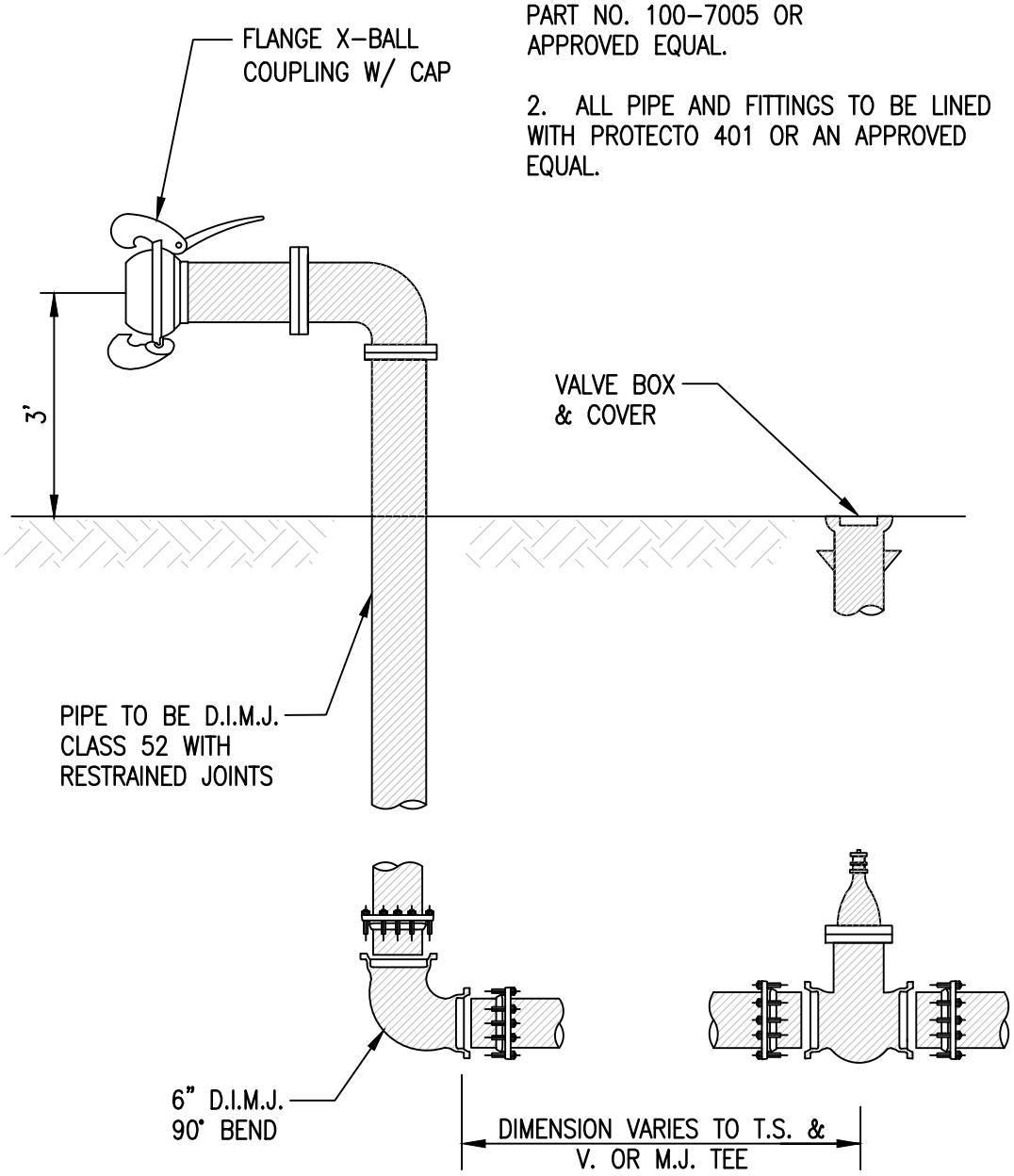

	CITY OF NORFOLK – DEPARTMENT OF UTILITIES STANDARD DETAILS	SCALE: NOT TO SCALE
DATE: 03/07	EMERGENCY PUMP CONNECTION	DRAWING NO. CS 13

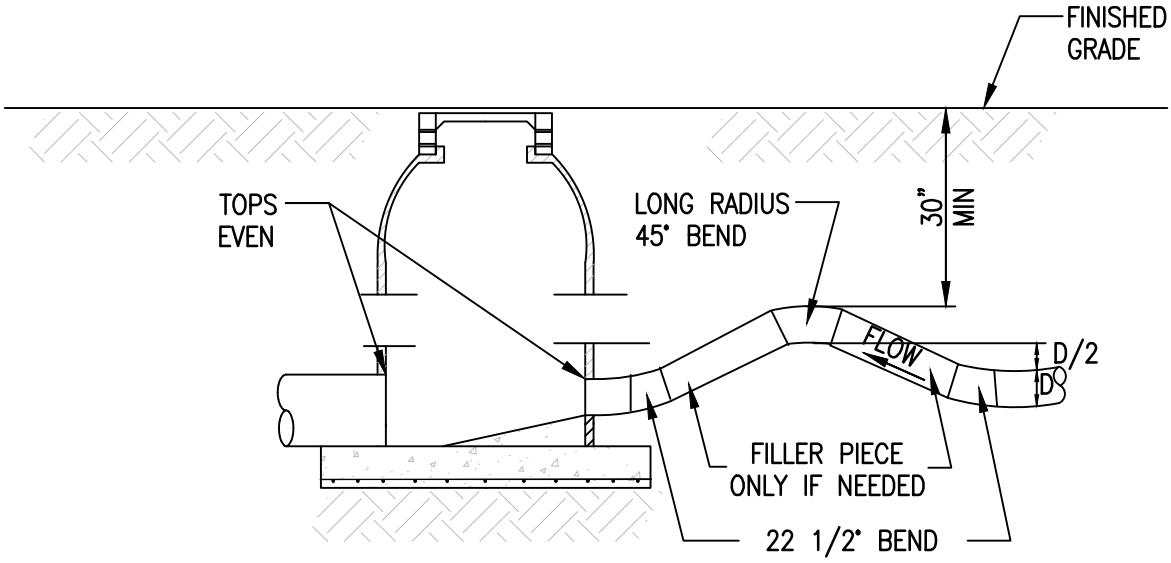

FOR DISCHARGE INTO DEEP MANHOLE

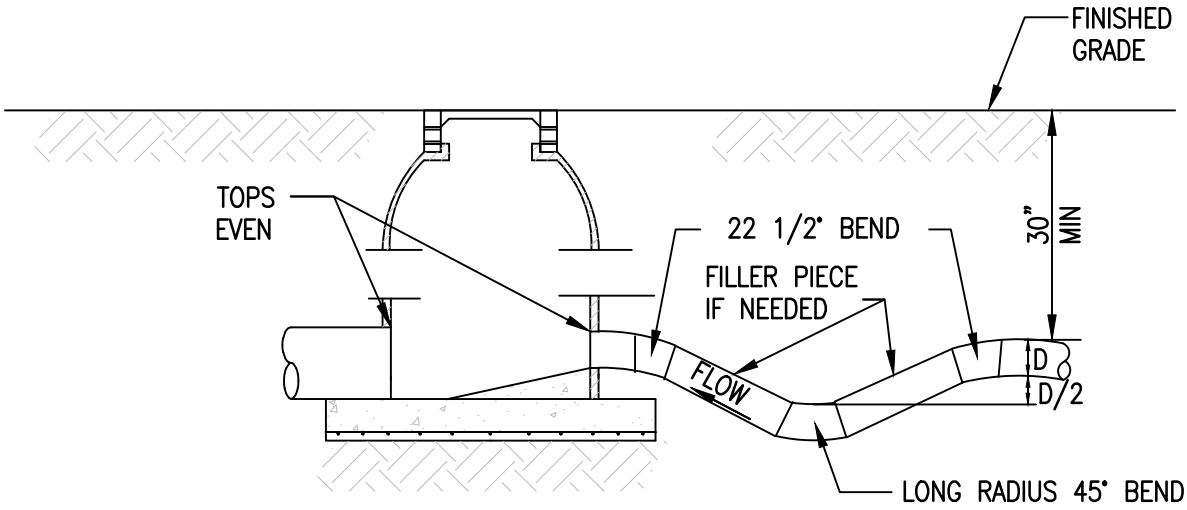

FOR DISCHARGE INTO SHALLOW MANHOLE

MEGA-LUG OR APPROVED EQUAL REQUIRED ON ALL BENDS

	CITY OF NORFOLK – DEPARTMENT OF UTILITIES STANDARD DETAILS	SCALE: NOT TO SCALE
DATE: 03/07	FORCE MAIN DISCHARGE CONNECTION	DRAWING NO. CS 14

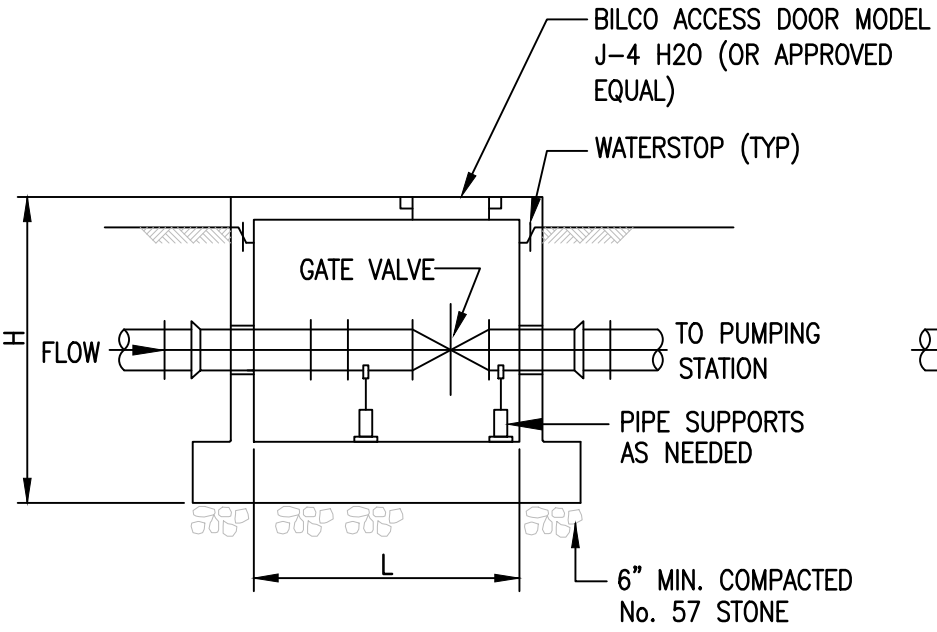

VAULT SECTION

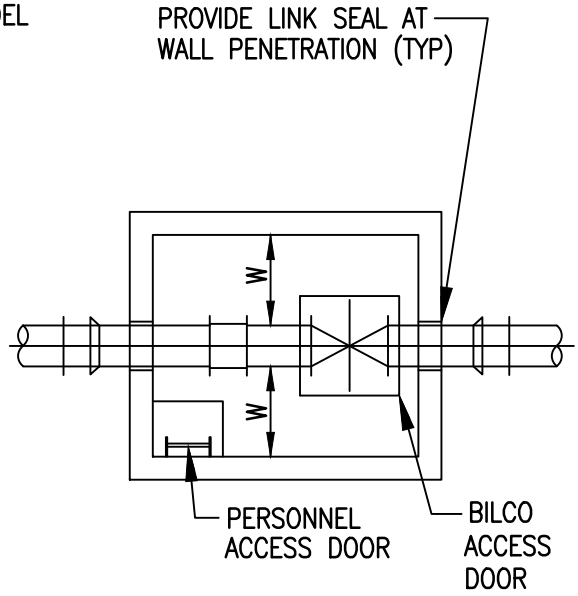

VAULT PLAN

NOTES:

1. PRECAST UNITS SHALL BE DESIGNED BY A PROFESSIONAL ENGINEER PRACTICING IN THE COMMONWEALTH OF VIRGINIA.
2. PROVIDE CONCRETE WITH A MINIMUM F'C= 5000psi @ 28 DAYS
3. VAULTS SHALL BE DESIGNED FOR H20 LOADING + 1'-0" EARTH COVER + 35° IMPACT
4. "L" SHALL BE 6' FOR 12" PIPE AND SMALLER AND 8' FOR LARGER PIPE.
5. "W" SHALL BE A MINIMUM OF 2' FROM OUTSIDE DIAMETER OF VALVE OR OPERATING NUT TO VAULT WALL.
6. ACCESS DOOR SHALL BE SIZED TO ALLOW EASY ACCESS TO THE GATE VALVE OPERATING NUT. CONFIGURATION OF THE VALVE AND LOCATION OF THE HATCH VARIES DEPENDING ON SIZE AND ORIENATION OF THE GATE VALVE.

	CITY OF NORFOLK – DEPARTMENT OF UTILITIES STANDARD DETAILS	SCALE: NOT TO SCALE
DATE: 03/07	PRECAST CONCRETE VALVE VAULT	DRAWING NO. CS 15

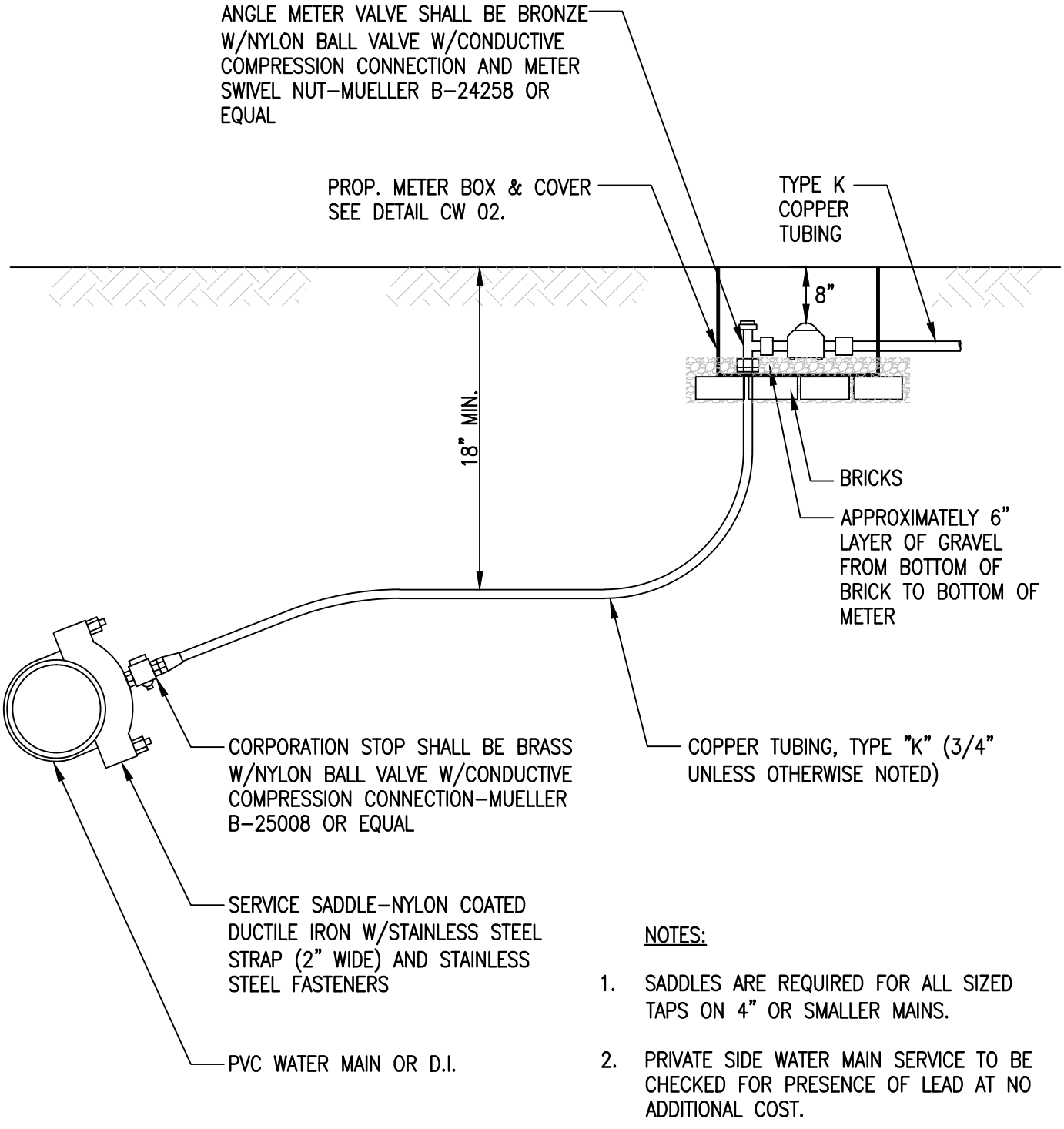

NOTES:

1. SADDLES ARE REQUIRED FOR ALL SIZED TAPS ON 4" OR SMALLER MAINS.
2. PRIVATE SIDE WATER MAIN SERVICE TO BE CHECKED FOR PRESENCE OF LEAD AT NO ADDITIONAL COST.

	CITY OF NORFOLK – DEPARTMENT OF UTILITIES STANDARD DETAILS	SCALE: NOT TO SCALE
DATE: 10/07	TYPICAL TAP INSTALLATION	DRAWING NO. CW 01

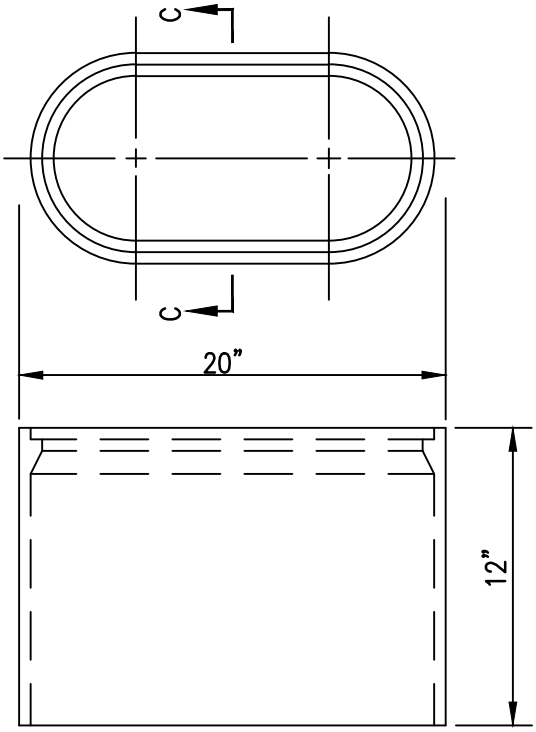

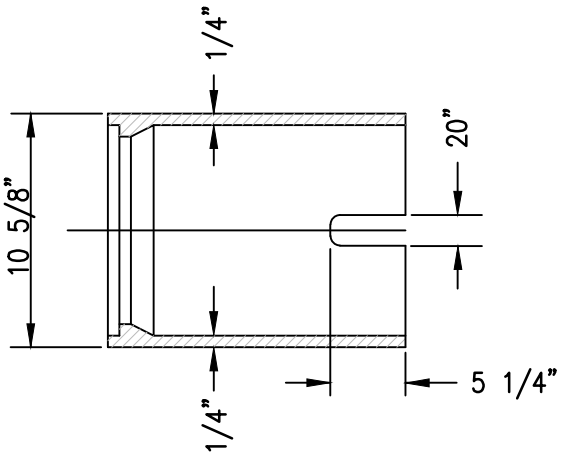

SECTION C–C

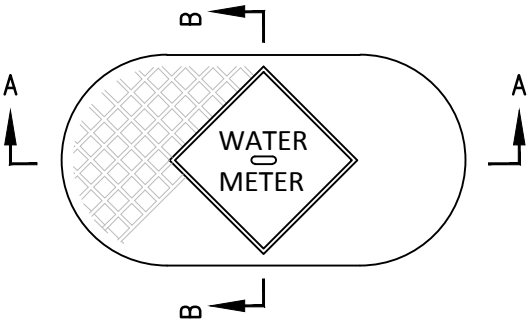

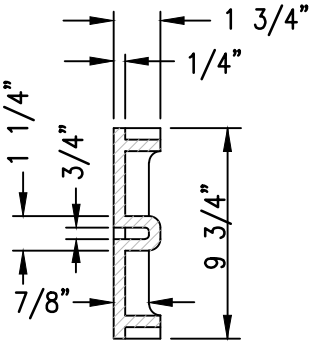

SECTION B–B

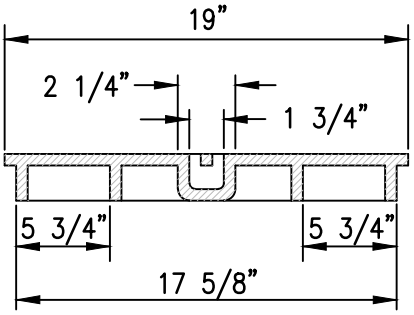

SECTION A–A

GENERAL SPECIFICATIONS:

1. CAST IRON SHALL BE 35,000 P.S.I.
2. ASTM A–48 CLASS 35B

	CITY OF NORFOLK – DEPARTMENT OF UTILITIES STANDARD DETAILS	SCALE: NOT TO SCALE
DATE: 03/07	WATER METER BOX & COVER	DRAWING NO. CW 02

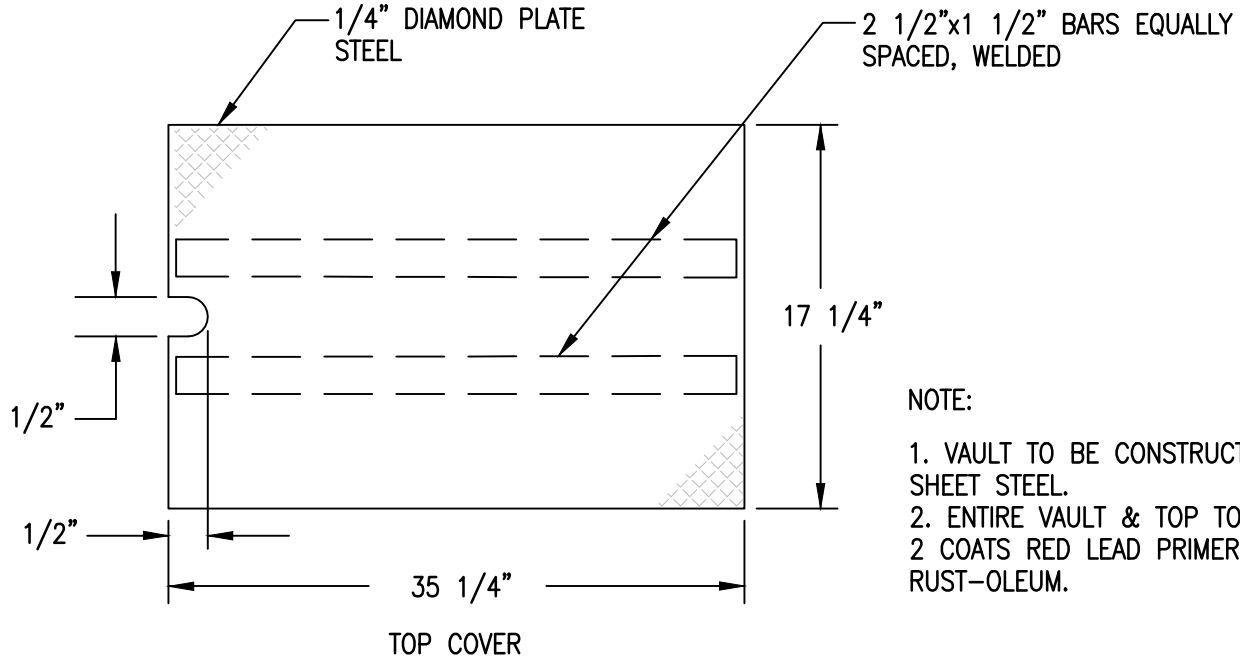

TOP COVER

NOTE:

1. VAULT TO BE CONSTRUCTED OF 1/4" STD. SHEET STEEL.
2. ENTIRE VAULT & TOP TO BE COATED WITH 2 COATS RED LEAD PRIMER & 2 COATS RUST-OLEUM.

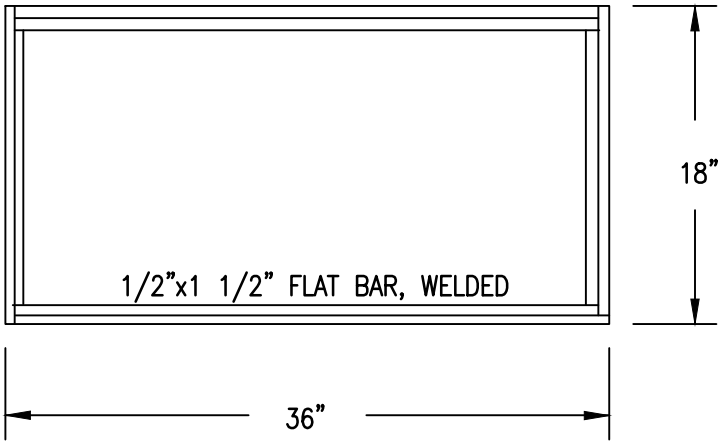

TOP VIEW

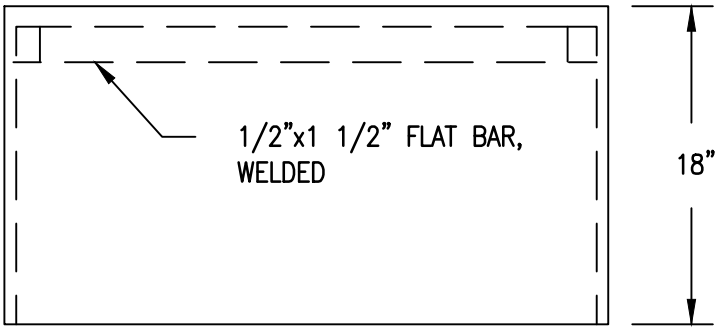

SIDE VIEW

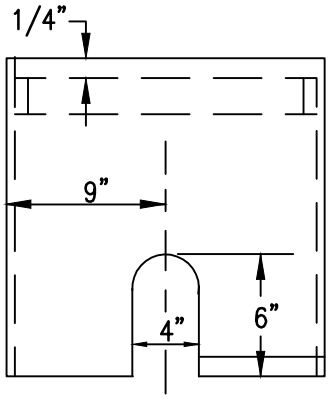

END VIEW

	CITY OF NORFOLK – DEPARTMENT OF UTILITIES STANDARD DETAILS	SCALE: NOT TO SCALE
DATE: 03/07	WATER METER VAULT & TOP	DRAWING NO. CW 03

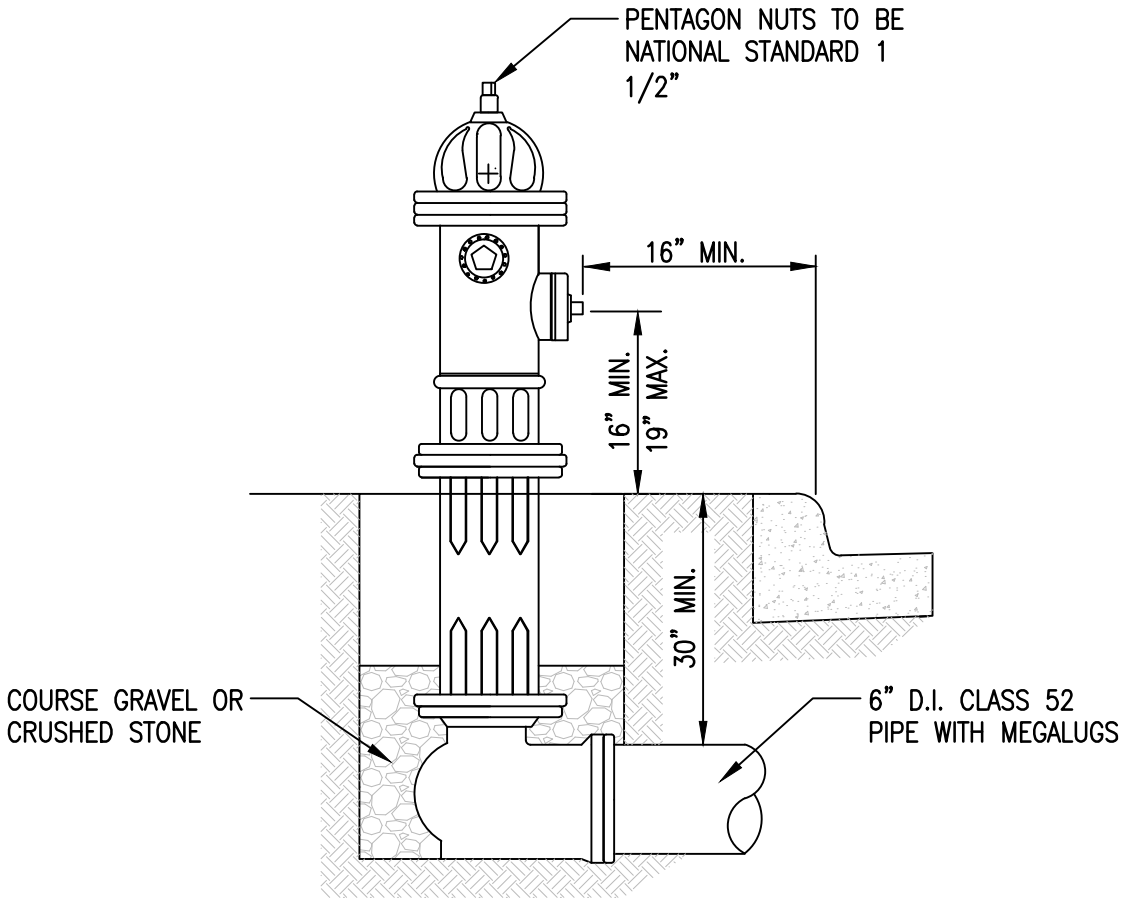

NOTES:

1. HYDRANTS TO BE SET WITH BURY LINE POSITIONED AT GRADE WITH NOZZLES AT MIN. OF 16 INCHES ABOVE GROUND.

2. WHEN SET BEHIND CURB THE NOZZLES ARE TO BE PARALLEL OR AT RIGHT ANGLES TO THE CURB, WITH THE PUMPER NOZZLE FACING THE CURB. THE PUMPER NOZZLE WILL BE A MIN. DISTANCE OF 16 INCHES FROM THE FACE OF THE CURB.

3. HYDRANT MUST HAVE SAFETY BREAKAWAY FEATURE SUCH AS MUELLER CENTURIAN 250 A421 OR APPROVED EQUAL.

4. 6" DUCTILE IRON CLASS 52 FROM TEE TO HYDRANT. VALVE TO BE RODDED TO TEE. VALVE & HYDRANT TO HAVE MEGALUGS.

5. COARSE GRAVEL OR CRUSHED STONE IS TO BE PLACED FROM THE BOTTOM OF THE TRENCH TO AT LEAST 6 INCHES ABOVE THE DRAIN OPENINGS IN THE HYDRANT AND AT A DISTANCE OF ONE FOOT AROUND THE ELBOW.

	CITY OF NORFOLK – DEPARTMENT OF UTILITIES STANDARD DETAILS	SCALE: NOT TO SCALE
DATE: 08/12	FIRE HYDRANT INSTALLATION	DRAWING NO. CW 04

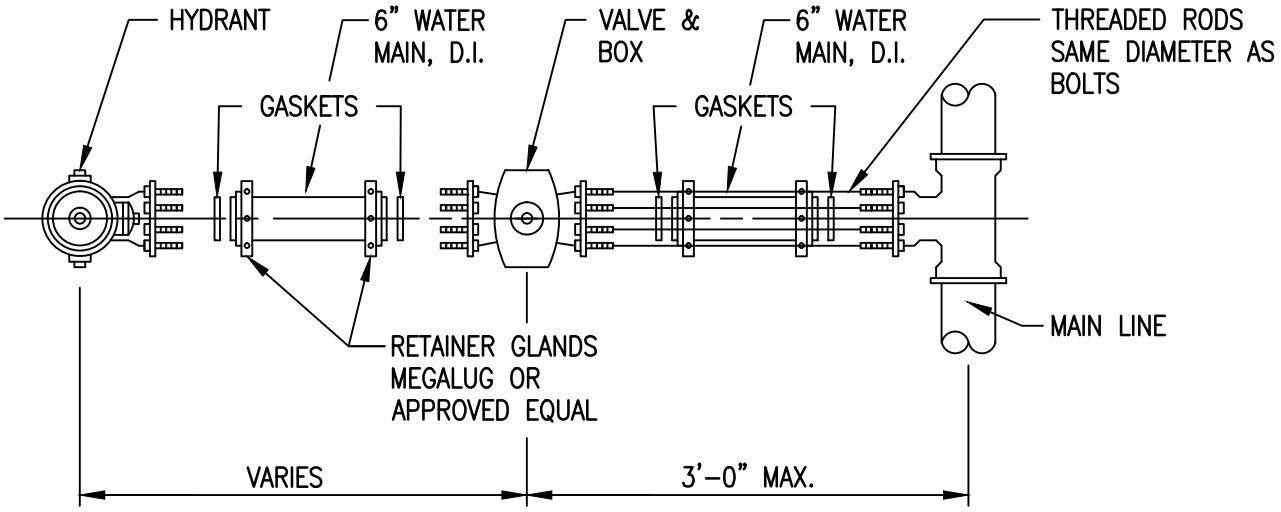

NOTES:

1. ALL HYDRANT CONNECTIONS MUST BE FIELD INSPECTED, BY A CITY INSPECTOR, PRIOR TO BACKFILLING.

2. ALL PIPE BETWEEN TEE AND FIRE HYDRANT SHALL BE DUCTILE IRON CLASS 52. VALVE SHALL BE RODDED TO SERVICE TEE. VALVE AND HYDRANT SHALL HAVE MEGALUGS OR APPROVED EQUAL.

	CITY OF NORFOLK – DEPARTMENT OF UTILITIES STANDARD DETAILS	SCALE: NOT TO SCALE
DATE: 03/07	FIRE HYDRANT CONNECTION	DRAWING NO. CW 05

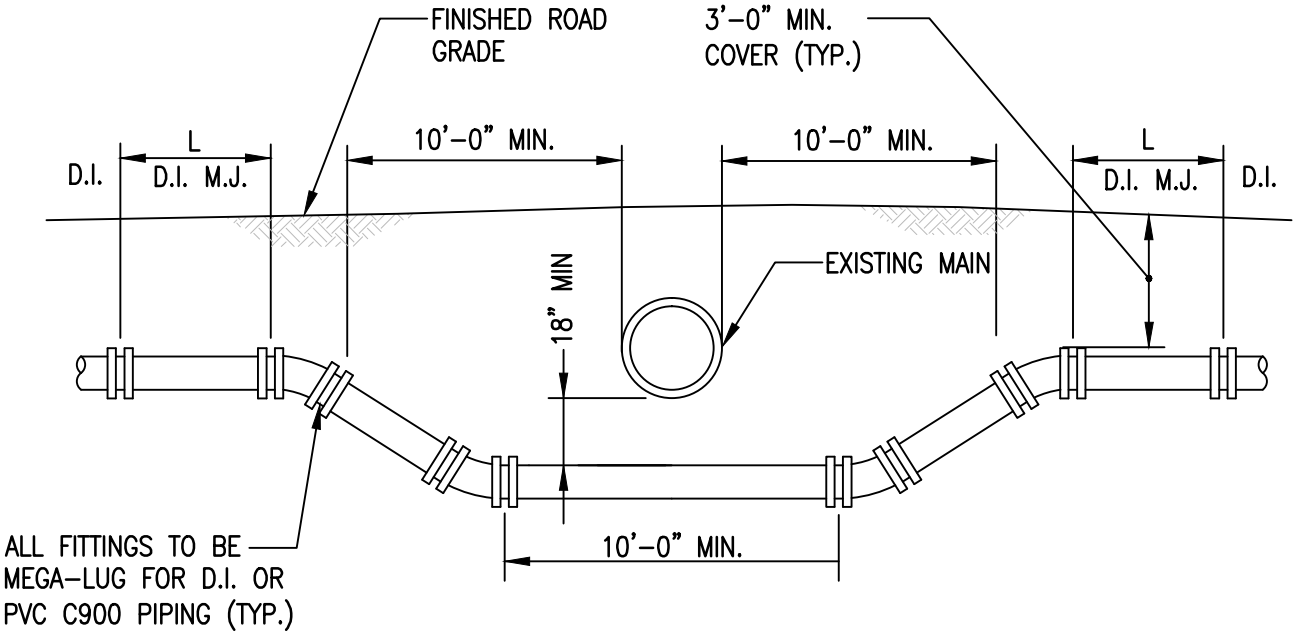

NOTES:

1. LOWERED SECTION TO BE OF DUCTILE IRON CLASS 52 MECHANICAL JOINT PIPE OR PVC C-900 OR PVC C-905 PIPE WITH RESTRAINED JOINTS.
2. THE DESIGN ENGINEER SHALL CALCULATE LENGTH (L) OF RESTRAINED SECTION.
3. USE APPROPRIATE TYPE RESTRAINT FOR DUCTILE IRON OR PVC.

	CITY OF NORFOLK – DEPARTMENT OF UTILITIES STANDARD DETAILS	SCALE: NOT TO SCALE
DATE: 03/07	LOWERING WATER MAIN OR NEW CONSTRUCTION	DRAWING NO. CW 06

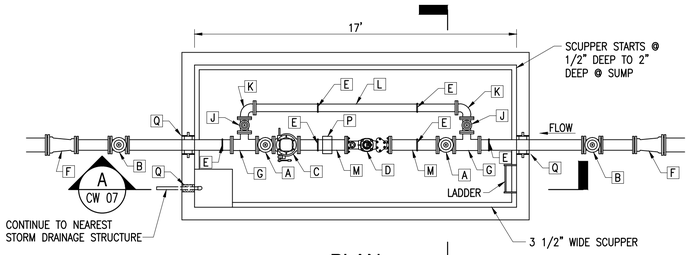

PLAN

B CW 07

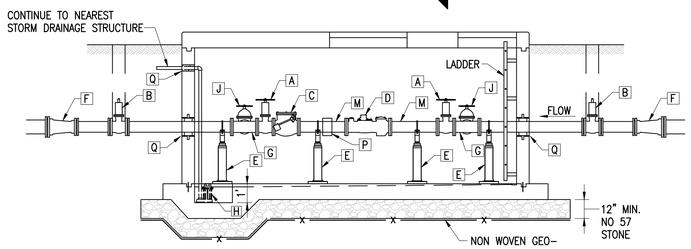

A CW 07 SECTION

FITTING SCHEDULE

NO.	SIZE	DESCRIPTION
A	6"	GATE VALVE WHEEL OPERATED
B	6"	GATE VALVE WITH VALVE BOX
C	6"	CHECK VALVE
D	6"	METER WITH STRAINER
E	–	PIPE SUPPORT
F	8" X 6"	REDUCER (AS REQUIRED)
G	6" X 4"	FLANGED TEE
H	–	SUMP PUMP
J	4"	GATE VALVE WHEEL OPERATED
K	4"	FLANGED 90 DEGREE ELBOW
L	4"	SPOOL PIECE
M	6"	SPOOL PIECE
P	6"	SMITH BLAIR 912 CAST FLANGED COUPLING ADAPTER OR APPROVED EQUAL
Q	–	WALL SLEEVE

ALL PIPE SHALL BE THICKNESS CLASS 52 DUCTILE IRON (D.I.).

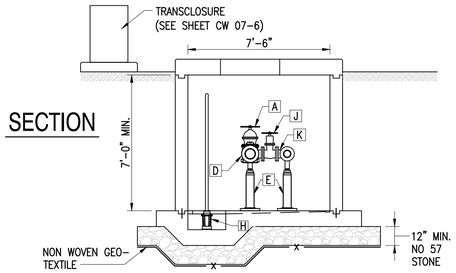

B CW 07 SECTION

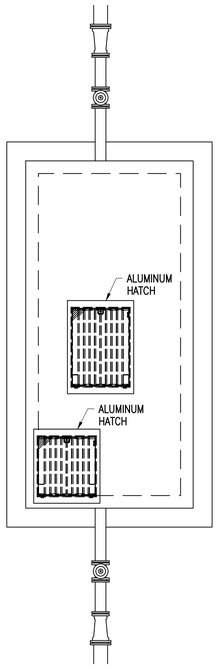

GENERAL NOTES:

VAULT
1. EXCAVATION FOR METER VAULT SHALL BE EXTENDED A MINIMUM OF 12" BELOW BOTTOM OF BASE SLAB ELEVATION. THE UNDERCUT EXCAVATION SHALL BE COVERED WITH A NON-WOVEN GEOTEXTILE FABRIC; SUCH AS, TREVIRA SPUNBOUND TYPE 1120 OR EQUIVALENT AND REFILLED TO THE REQUIRED GRADE WITH COARSE AGGREGATE VDOT SIZE NO. 57 (12" MINIMUM).
2. PROVIDE 6 MIL MINIMUM POLYURETHANE VAPOR BARRIER BETWEEN BASE SLAB AND COARSE AGGREGATE.
3. SHEAR KEYS AND AN APPROVED WATERSTOP SHALL BE PROVIDED AT ALL JOINTS.
4. TOP SLAB SHALL BE DESIGNED FOR H-20 TRAFFIC LOADING. VAULT NOT INTENDED TO BE IN HIGH DENSITY TRAFFIC.
5. ALL CONCRETE CONSTRUCTION SHALL BE IN ACCORDANCE WITH ACI-318.
6. ALL EXPOSED EDGES SHALL BE CHAMFERED 3/4".
7. ALL EXTERIOR SURFACES OF THE VAULT BELOW GRADE SHALL RECEIVE A WATER TIGHT COAT OF FLEXIBLE FIBER REINFORCED ACRYLIC EMULSION WATER PROOFING MEMBRANE.
8. ALL ITEMS INDICATED OR SHOWN SHALL BE INCLUDED IN THE COST OF THE VAULT.

DIMENSIONS
1. TOP OF VAULT SHALL BE 6" ABOVE THE ADJACENT GROUND ELEVATION.
2. VAULT SHALL HAVE A MINIMUM INTERIOR CLEAR HEIGHT OF 7'-0".
3. INTERIOR PIPING SHALL BE 3' FROM PIPE CENTERLINE TO THE FLOOR AND A MINIMUM CLEAR DISTANCE OF 3' BETWEEN VAULT INTERIOR WALL AND EDGE OF PIPE.
4. EXTERIOR GATE VALVES SHALL BE PLACED A MINIMUM OF 3' FROM VAULT EXTERIOR WALL.

LADDER
1. LADDER SHALL BE ALUMINUM ASTM B221, ALLOY 6063 – T6.
2. SIDERAILS SHALL BE CONTINUOUS EXTRUDED CHANNELS OR TUBES, NOT LESS THAN 2 1/2" DEEP, 3/4" WIDE, AND 1/8" THICK. MINIMUM CLEAR DISTANCE BETWEEN SIDERAILS SHALL BE 16".
3. RUNGS SHALL BE EXTRUDED TUBES NOT LESS THAN 3/4" DEEP AND NOT LESS THAN 1/8" THICK, WITH RIBBED TREAD SURFACES. RUNG MINIMUM SPACING SHALL BE 16". EACH RUNG SHALL SUPPORT A MINIMUM LOAD OF 250 POUNDS PLACED AT THE CENTER OF THE RUNG.
4. LADDER SHALL BE VERTICAL AND CENTERED ON THE HATCH. A MINIMUM CLEARANCE BETWEEN RUNGS AND VAULT INTERIOR WALL SHALL BE PROVIDED.
5. PROVIDE TYPE 316 STAINLESS STEEL FASTENERS FOR FASTENING ALUMINUM.

ACCESS HATCHES
1. ACCESS HATCHES SHALL BE 1/4" THICK DIAMOND PATTERN ALUMINUM COVER PLATE WITH TYPE 316 STAINLESS STEEL HINGES AND HARDWARE.
2. ACCESS HATCHES SHALL BE RECESSED AND LOCKABLE. RECESSED LIFTING HANDLE AND RECESSED LOCK BOX FOR PADLOCK SHALL BE PROVIDED.
3. MINIMUM HATCH SIZE SHALL BE 36" X 36" FOR LADDER ACCESS, 36" X 48" ABOVE EACH METER.
4. HATCHES SHALL BE TRAFFIC RATED FOR OFF STREET LOCATIONS NOT SUBJECT TO HIGH DENSITY TRAFFIC.
5. HATCHES SHALL BE SPRING ASSISTED OR HYDRAULIC ASSISTED.

METER AND PIPING
1. ALL METERS, VALVES AND PIPING SHALL BE IN ACCORDANCE WITH AWWA SPECIFICATIONS AND STANDARDS.
2. PIPING WITHIN VAULT SHALL BE DUCTILE IRON FLANGED PIPE. EXTERIOR PIPING SHALL BE DUCTILE IRON MECHANICAL JOINT (RESTRAINED) PIPE. ALL PIPING SHALL BE THICKNESS CLASS 52.
3. METER OR METERS SHALL BE SENSUS TURBO-METER OR APPROVED EQUAL WITH STRAINER. (TO BE INSTALLED BY CITY FORCES).
4. LENGTH OF SPOOL PIECE EACH SIDE OF METER SHALL BE A MINIMUM OF 5 PIPE DIAMETERS.
5. AN ACCESS HATCH SHALL BE PROVIDED CENTERED OVER METER.
6. GATE VALVES SHALL BE RESILIENT SEAT. GATE VALVES WITHIN VAULT SHALL BE WHEEL OPERATED. EXTERIOR GATE VALVES SHALL BE OPERATED WITH SQUARE NUTS. VALVES BOX SHALL BE AS PER UTILITIES STANDARD CWS 01 OR CWS 02 AS APPROPRIATE.
7. BY-PASS PIPING, FITTINGS AND VALVES SHALL BE 4" IN DIAMETER.
8. PIPING SHALL BE SUPPORTED BY MANUFACTURED CAST IRON OR GALVANIZED STEEL SUPPORTS.
9. PIPING PENETRATIONS THROUGH CONCRETE SHALL BE SEALED USING LINK – SEAL AND A STEEL WALL SLEEVE WITH WATER STOP COLLAR.

SUMP PUMP
1. PROVIDE A FLOAT OPERATED 12 GPM SUMP PUMP WITH PIT.
2. PROVIDE 1 1/2" PVC SCHEDULE 80 DISCHARGE PIPE. DISCHARGE PIPING SHALL INCLUDE COUPLINGS, GATE VALVE, CHECK VALVE AND FITTINGS.
3. TERMINATE SUMP DISCHARGE PIPING AT NEAREST STORM DRAINAGE STRUCTURE.

ELECTRICAL
1. VAULT INTERIOR SHALL HAVE LIGHTING. SEE SHEET CW 07.
2. PROVIDE TELEMETRY SYSTEM TO RELAY WATER METER DATA AS REQUIRED BY NORFOLK UTILITIES DEPARTMENT. MUST COORDINATE WITH MOST CURRENT SCADA REQUIREMENTS TO BE PROVIDED BY NORFOLK UTILITIES.

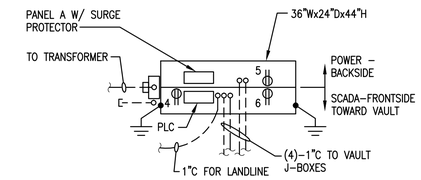

TRANSCLOSURE PLAN

NOT TO SCALE

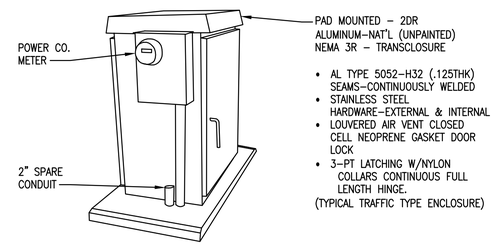

TRANSCLOSURE DETAIL

NOT TO SCALE

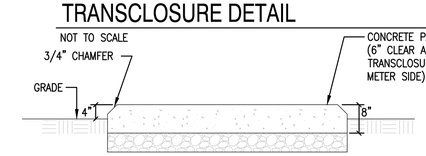

CONCRETE PAD DETAIL - (TRANSCLOSURE)

NOT TO SCALE

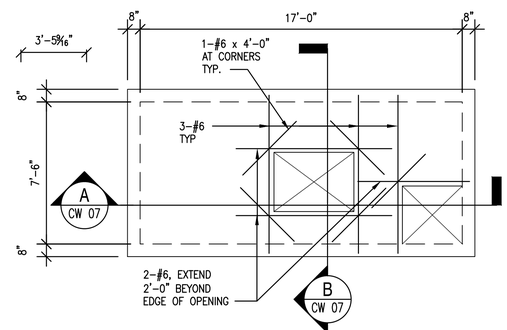

TOP SLAB PLAN

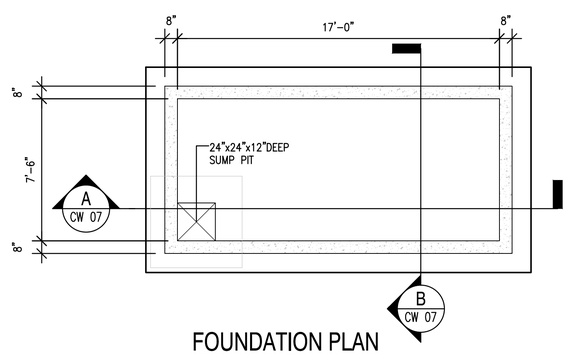

FOUNDATION PLAN

CONCRETE WORK:

1. UNLESS OTHERWISE NOTED OR DETAILED ALL CONCRETE WORK SHALL BE IN ACCORDANCE WITH THE AMERICAN CONCRETE CODE (A.C.I. 318) AND ITS LATEST AMENDMENTS AND THE SPECIFICATIONS FOR STRUCTURAL CONCRETE FOR BUILDINGS (ACI 301).

2. ALL CONCRETE SHALL BE NORMAL WEIGHT AGGREGATE CONCRETE HAVING A MINIMUM COMPRESSIVE STRENGTH OF 4,500 P.S.I. AT THE AGE OF 28 DAYS. CONCRETE EXPOSED TO WEATHER SHALL BE AIR ENTRAINED.

3. ALL REINFORCING SHALL CONFORM TO ASTM A-615, GRADE 60.

4. ALL REINFORCING STEEL SHALL BE HELD SECURELY IN PLACE TO PREVENT DISLOCATION DURING THE POURING OPERATION. SLAB REINFORCING BARS SHALL BE SUPPORTED ON HIGH CHAIRS AND BAR SPACERS OF SUITABLE DESIGN, OR CONCRETE BLOCKS HAVING THE SAME MINIMUM COMPRESSIVE STRENGTH OF THE CONCRETE SLAB.

5. DETAILING OF ALL CONCRETE STEEL REINFORCEMENT SHALL BE IN ACCORDANCE WITH THE MANUAL OF STANDARD PRACTICE FOR DETAILING REINFORCED CONCRETE STRUCTURES (A.C.I. 315).

6. EXCEPT AS OTHERWISE SHOWN MINIMUM PROTECTION (CONCRETE COVER) FOR REINFORCING STEEL SHALL BE AS FOLLOWS:
CONCRETE SURFACES CAST AGAINST SOIL: 3"
CONCRETE SURFACES EXPOSED TO EARTH OR WEATHER:1-1/2"

DESIGN CRITERIA:

1. VIRGINIA UNIFORM STATEWIDE BUILDING CODE – 2009 EDITION ADOPTED MARCH, 2011.

2. REFERENCED CODES: ACI 318 & COMMENTARY, BUILDING CODE FOR REINF. CONCRETE; ANSI/AISC 360-05, SPECIFICATION FOR STRUCTURAL STEEL BUILDINGS.

DESIGN LOADS

DESIGN LIVE LOADS USED IN THE DESIGN OF THIS STRUCTURE ARE AS FOLLOWS:
1. UNIFORM LIVE LOADS: 100 PSF
WHEEL LOAD: H-20 TRUCK

ELECTRICAL SPECIFICATIONS

CONDUIT: SCHEDULE 80 PVC BELOW GRADE AND IN VAULT. RIGID GALV. STEEL IN TRANSCLOSURE.

POWER CONDUCTORS: COPPER TYPE THWN, 75°C, 600V.

PANEL: LOADCENTER, SEE SCHEDULE, COPPER BUS, SEPARATE GROUND BAR AND NEUTRAL BAR, COORDINATE SHORT CIRCUIT RATING WITH ELECTRIC UTILITY. PRIOR TO ORDERING. SERVICE ENTRANCE RATED.

SCADA: COORDINATE WITH CITY FOR PLC OR SCADA REQUIREMENTS (RADIO OR LANDLINE)

LIGHT FIXTURE: ( ) VAPORTIGHT WALL MOUNTED, WITH GLOBE – LED LAMP 20W POWER – HUBBELL # VL15WIG OR EQUAL.

VAULT RECEPTACLE: ( ) DUPLEX RECEPTACLE 20A, 125V, WEATHERPROOF "IN USE" ENCLOSURE. MOUNT 36" ABOVE BOTTOM VAULT.

FLOAT SWITCH: (F) MERCURY FLOAT SWITCH – HIGH WATER INDICATOR SET AT FLOOR LEVEL.

JUNCTION BOX: (J) NEMA 4 J-BOX – 4"x4"x2"

SWITCH: (S) 1P-20A, 120/277V, WEATHERPROOF-WET-ENCLOSURE. MOUNT WITHIN REACH TOP OF LADDER.

TRANSCLOSURE: SEE DETAIL

GROUND RODS: 3/4"ø X 10' CU-CLAD DRIVEN WITH TOP 1' BELOW GRADE.

GROUND CONNECTIONS: SHALL BE CADWELD WELDS.

CONDUIT SEALS: ALL CONDUIT PENETRATIONS OF VAULT AND TRANSCLOSURE PAD SHALL BE SEALED EACH END AFTER CONDUCTORS INSTALLED.

I/O REQUIREMENTS:
FM FLOW METER
PS PRESSURE TRANSDUCER
HW HIGH WATER FLOAT
SP SYSTEM POWER AT PANEL
TS TAMPER SWITCH(2) TRANSCLOSURE
V VAULT

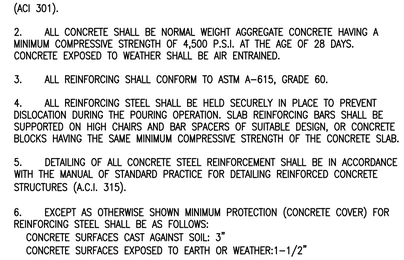

A CW 07 SECTION

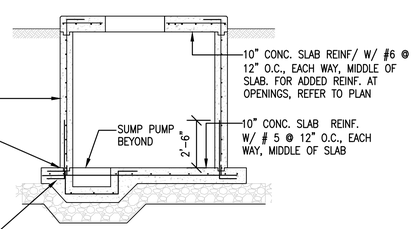

B CW 07 SECTION

STRUCTURAL ABBREVIATIONS	
HORIZ	HORIZONTAL
MAX	MAXIMUM
MIN	MINIMUM
O.C.	ON CENTER
PSF	POUNDS PER SQUARE FOOT
PSI	POUNDS PER SQUARE INCH
REINF	REINFORCEMENT
TYP	TYPICAL

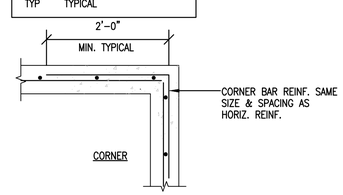

TYPICAL DETAIL SHOWING CONTINUOUS REINFORCING AT CORNERS

NOT TO SCALE

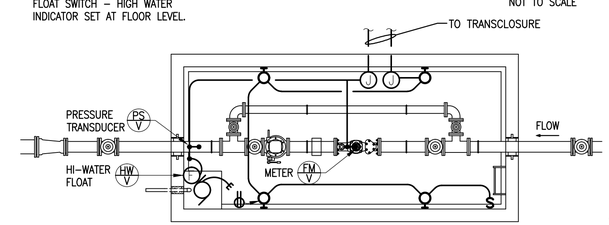

SINGLE 6" WATER METER VAULT

NOT TO SCALE

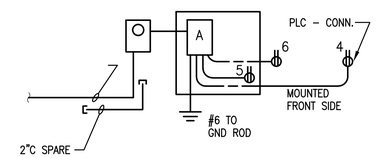

POWER RISER DIAGRAM

NOT TO SCALE

PANEL 'A' SCHEDULE

60A, M.C.B., 120/240 V, 1 PHASE, 3 WIRE, 60Hz, SURGE PROTECTOR, SEE NOTE BELOW

LOAD SERVED	LOAD (AMPS) A	LOAD (AMPS) B	BKR TRIP	WIRE SIZE	CKT NO.		CKT NO.	WIRE SIZE	BKR TRIP	LOAD (AMPS) A	LOAD (AMPS) B	LOAD SERVED
LIGHTS – VAULT	3		20	12	1		2	12	20	7		SUMP PUMP
RECEPT – MAINT. VAULT		5	20	12	3		4	12	20		5	PLC
RECEPT – MAINT POWER SIDE	5		20	12	5		6	12	20	5		RECEPT – COMM. SIDE
SPARE		0	20	--	7		8	--	20		0	SPARE
SPACE	0		--	--	9		10	--	20	0		SURGE PROTECTOR
SPACE		0	--	--	11		12				0	
TOTAL	8	5								12	5	TOTAL

TOTAL CONNECTED AMPS A: 20 B: 10

NOTE: PRIOR TO ORDERING PANEL – CONTRACTOR SHALL CONFIRM AVAILABLE SHORT CIRCUIT CURRENT FROM UTILITY COMPANY.

DATE: 06/12	CITY OF NORFOLK – DEPARTMENT OF UTILITIES STANDARD DETAILS	SCALE: NOT TO SCALE
	6" WATER METER VAULT (4" SIMILAR)	DRAWING NO. CW 07

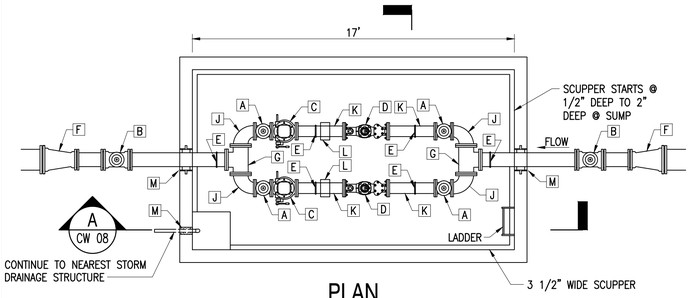

PLAN

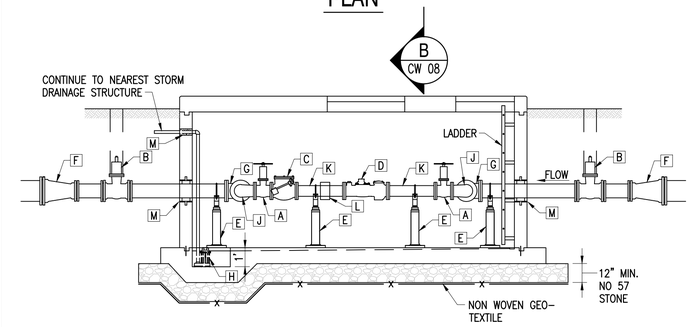

SECTION

FITTING SCHEDULE

NO.	SIZE	DESCRIPTION
A	6"	GATE VALVE WHEEL OPERATED
B	8"	GATE VALVE WITH VALVE BOX
C	6"	CHECK VALVE
D	6"	METER WITH STRAINER
E	–	PIPE SUPPORT
F	12" X 8"	REDUCER (AS REQUIRED)
G	8" X 8"	FLANGED TEE
H	–	SUMP PUMP
J	8" X 6"	REDUCING 90 DEGREE ELBOW
K	6"	SPOOL PIECE
L	6"	SMITH BLAIR 912 CAST FLANGED COUPLING ADAPTER OR APPROVED EQUAL
M	–	WALL SLEEVE

ALL PIPE SHALL BE THICKNESS CLASS 52 DUCTILE IRON (D.I.).

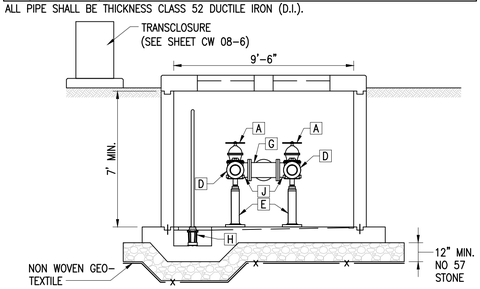

SECTION

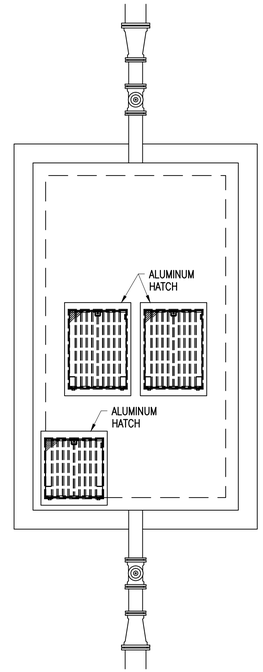

GENERAL NOTES:

VAULT
1. EXCAVATION FOR METER VAULT SHALL BE EXTENDED A MINIMUM OF 12" BELOW BOTTOM OF BASE SLAB ELEVATION. THE UNDERCUT EXCAVATION SHALL BE COVERED WITH A NON-WOVEN GEOTEXTILE FABRIC; SUCH AS, TREVIRA SPUNBOUND TYPE 1120 OR EQUIVALENT AND REFILLED TO THE REQUIRED GRADE WITH COARSE AGGREGATE VDOT SIZE NO. 57 (12" MINIMUM).
2. PROVIDE 6 MIL MINIMUM POLYURETHANE VAPOR BARRIER BETWEEN BASE SLAB AND COARSE AGGREGATE.
3. SHEAR KEYS AND AN APPROVED WATERSTOP SHALL BE PROVIDED AT ALL JOINTS.
4. TOP SLAB SHALL BE DESIGNED FOR H-20 TRAFFIC LOADING. VAULT NOT INTENDED TO BE IN HIGH DENSITY TRAFFIC.
5. ALL CONCRETE CONSTRUCTION SHALL BE IN ACCORDANCE WITH ACI-318.
6. ALL EXPOSED EDGES SHALL BE CHAMFERED 3/4".
7. ALL EXTERIOR SURFACES OF THE VAULT BELOW GRADE SHALL RECEIVE A WATER TIGHT COAT OF FLEXIBLE FIBER REINFORCED ACRYLIC EMULSION WATER PROOFING MEMBRANE.
8. ALL ITEMS INDICATED OR SHOWN SHALL BE INCLUDED IN THE COST OF THE VAULT.

DIMENSIONS
1. TOP OF VAULT SHALL BE 6" ABOVE THE ADJACENT GROUND ELEVATION.
2. VAULT SHALL HAVE A MINIMUM INTERIOR CLEAR HEIGHT OF 7'-0".
3. INTERIOR PIPING SHALL BE 3' FROM PIPE CENTERLINE TO THE FLOOR AND A MINIMUM CLEAR DISTANCE OF 3' BETWEEN VAULT INTERIOR WALL AND EDGE OF PIPE.
4. EXTERIOR GATE VALVES SHALL BE PLACED A MINIMUM OF 3' FROM VAULT EXTERIOR WALL.

LADDER
1. LADDER SHALL BE ALUMINUM ASTM B221, ALLOY 6063 – T6.
2. SIDERAILS SHALL BE CONTINUOUS EXTRUDED CHANNELS OR TUBES, NOT LESS THAN 2 1/2" DEEP, 3/4" WIDE, AND 1/8" THICK. MINIMUM CLEAR DISTANCE BETWEEN SIDERAILS SHALL BE 16".
3. RUNGS SHALL BE EXTRUDED TUBES NOT LESS THAN 3/4" DEEP AND NOT LESS THAN 1/8" THICK, WITH RIBBED TREAD SURFACES. RUNG MINIMUM SPACING SHALL BE 16". EACH RUNG SHALL SUPPORT A MINIMUM LOAD OF 250 POUNDS PLACED AT THE CENTER OF THE RUNG.
4. LADDER SHALL BE VERTICAL AND CENTERED ON THE HATCH. A MINIMUM CLEARANCE BETWEEN RUNGS AND VAULT INTERIOR WALL SHALL BE PROVIDED.
5. PROVIDE TYPE 316 STAINLESS STEEL FASTENERS FOR FASTENING ALUMINUM.

ACCESS HATCHES
1. ACCESS HATCHES SHALL BE 1/4" THICK DIAMOND PATTERN ALUMINUM COVER PLATE WITH TYPE 316 STAINLESS STEEL HINGES AND HARDWARE.
2. ACCESS HATCHES SHALL BE RECESSED AND LOCKABLE. RECESSED LIFTING HANDLE AND RECESSED LOCK BOX FOR PADLOCK SHALL BE PROVIDED.
3. MINIMUM HATCH SIZE SHALL BE 36" X 36" FOR LADDER ACCESS, 36" X 48" ABOVE EACH METER.
4. HATCHES SHALL BE TRAFFIC RATED FOR OFF STREET LOCATIONS NOT SUBJECT TO HIGH DENSITY TRAFFIC.
5. HATCHES SHALL BE SPRING ASSISTED OR HYDRAULIC ASSISTED.

METER AND PIPING
1. ALL METERS, VALVES AND PIPING SHALL BE IN ACCORDANCE WITH AWWA SPECIFICATIONS AND STANDARDS.
2. PIPING WITHIN VAULT SHALL BE DUCTILE IRON FLANGED PIPE. EXTERIOR PIPING SHALL BE DUCTILE IRON MECHANICAL JOINT (RESTRAINED) PIPE. ALL PIPING SHALL BE THICKNESS CLASS 52.
3. METER OR METERS SHALL BE SENSUS TURBO-METER OR APPROVED EQUAL WITH STRAINER. (TO BE INSTALLED BY CITY FORCES).
4. LENGTH OF SPOOL PIECE EACH SIDE OF METER SHALL BE A MINIMUM OF 5 PIPE DIAMETERS.
5. AN ACCESS HATCH SHALL BE PROVIDED CENTERED OVER METER.
6. GATE VALVES SHALL BE RESILIENT SEAT. GATE VALVES WITHIN VAULT SHALL BE WHEEL OPERATED. EXTERIOR GATE VALVES SHALL BE OPERATED WITH SQUARE NUTS. VALVES BOX SHALL BE AS PER UTILITIES STANDARD CWS 01 OR CWS 02 AS APPROPRIATE.
7. BY-PASS PIPING, FITTINGS AND VALVES SHALL BE 4" IN DIAMETER.
8. PIPING SHALL BE SUPPORTED BY MANUFACTURED CAST IRON OR GALVANIZED STEEL SUPPORTS.
9. PIPING PENETRATIONS THROUGH CONCRETE SHALL BE SEALED USING LINK – SEAL AND A STEEL WALL SLEEVE WITH WATER STOP COLLAR.

SUMP PUMP
1. PROVIDE A FLOAT OPERATED 12 GPM SUMP PUMP WITH PIT.
2. PROVIDE 1 1/2" PVC SCHEDULE 80 DISCHARGE PIPE. DISCHARGE PIPING SHALL INCLUDE COUPLINGS, GATE VALVE, CHECK VALVE AND FITTINGS.
3. TERMINATE SUMP DISCHARGE PIPING AT NEAREST STORM DRAINAGE STRUCTURE.

ELECTRICAL
1. VAULT INTERIOR SHALL HAVE LIGHTING. SEE SHEET CW 08.
2. PROVIDE TELEMETRY SYSTEM TO RELAY WATER METER DATA AS REQUIRED BY NORFOLK UTILITIES DEPARTMENT. MUST COORDINATE WITH MOST CURRENT SCADA REQUIREMENTS TO BE PROVIDED BY NORFOLK UTILITIES.

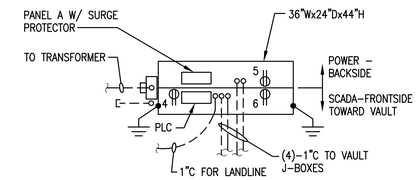

TRANSCLOSURE PLAN

NOT TO SCALE

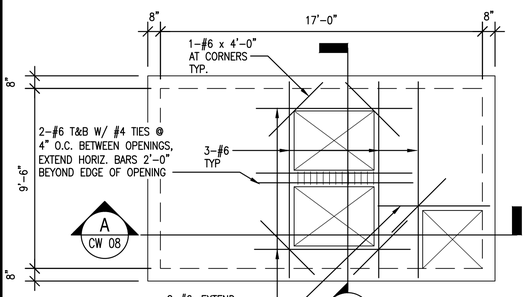

TOP SLAB PLAN

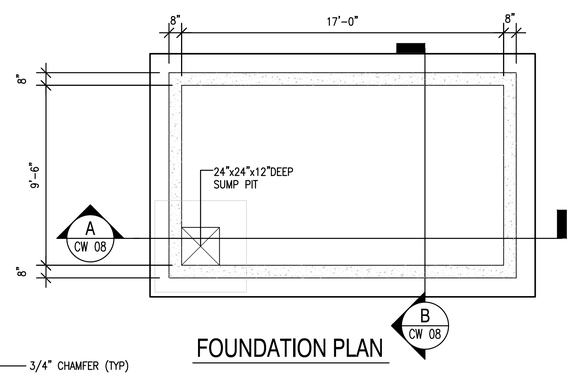

FOUNDATION PLAN

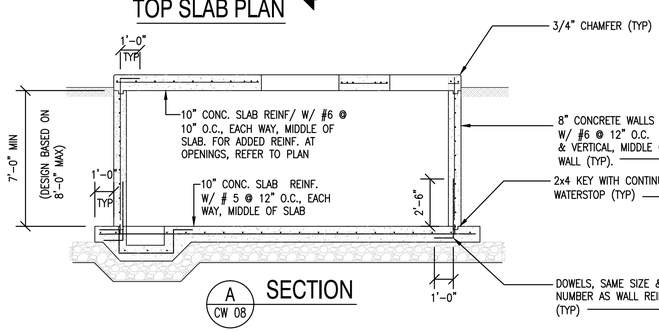

SECTION

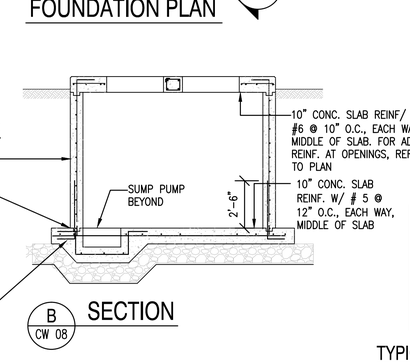

SECTION

CONCRETE WORK:

1. UNLESS OTHERWISE NOTED OR DETAILED ALL CONCRETE WORK SHALL BE IN ACCORDANCE WITH THE AMERICAN CONCRETE CODE (A.C.I. 318) AND ITS LATEST AMENDMENTS AND THE SPECIFICATIONS FOR STRUCTURAL CONCRETE FOR BUILDINGS (ACI 301).

2. ALL CONCRETE SHALL BE NORMAL WEIGHT AGGREGATE CONCRETE HAVING A MINIMUM COMPRESSIVE STRENGTH OF 4,500 P.S.I. AT THE AGE OF 28 DAYS. CONCRETE EXPOSED TO WEATHER SHALL BE AIR ENTRAINED.

3. ALL REINFORCING SHALL CONFORM TO ASTM A-615, GRADE 60.

4. ALL REINFORCING STEEL SHALL BE HELD SECURELY IN PLACE TO PREVENT DISLOCATION DURING THE POURING OPERATION. SLAB REINFORCING BARS SHALL BE SUPPORTED ON HIGH CHAIRS AND BAR SPACERS OF SUITABLE DESIGN, OR CONCRETE BLOCKS HAVING THE SAME MINIMUM COMPRESSIVE STRENGTH OF THE CONCRETE SLAB.

5. DETAILING OF ALL CONCRETE STEEL REINFORCEMENT SHALL BE IN ACCORDANCE WITH THE MANUAL OF STANDARD PRACTICE FOR DETAILING REINFORCED CONCRETE STRUCTURES (A.C.I. 315).

6. EXCEPT AS OTHERWISE SHOWN MINIMUM PROTECTION (CONCRETE COVER) FOR REINFORCING STEEL SHALL BE AS FOLLOWS:
CONCRETE SURFACES CAST AGAINST SOIL: 3"
CONCRETE SURFACES EXPOSED TO EARTH OR WEATHER:1-1/2"

DESIGN CRITERIA:

1. VIRGINIA UNIFORM STATEWIDE BUILDING CODE – 2009 EDITION ADOPTED MARCH, 2011.

2. REFERENCED CODES: ACI 318 & COMMENTARY, BUILDING CODE FOR REINF. CONCRETE; ANSI/AISC 360-05, SPECIFICATION FOR STRUCTURAL STEEL BUILDINGS.

DESIGN LOADS

DESIGN LIVE LOADS USED IN THE DESIGN OF THIS STRUCTURE ARE AS FOLLOWS:
1. UNIFORM LIVE LOADS: 100 PSF
WHEEL LOAD: H-20 TRUCK

ELECTRICAL SPECIFICATIONS

CONDUIT: SCHEDULE 80 PVC BELOW GRADE AND IN VAULT. RIGID GALV. STEEL IN TRANSCLOSURE.

POWER CONDUCTORS: COPPER TYPE THWN, 75°C, 600V.

PANEL: LOADCENTER, SEE SCHEDULE, COPPER BUS, SEPARATE GROUND BAR AND NEUTRAL BAR, COORDINATE SHORT CIRCUIT RATING WITH ELECTRIC UTILITY. PRIOR TO ORDERING. SERVICE ENTRANCE RATED.

SCADA: COORDINATE WITH CITY FOR PLC OR SCADA REQUIREMENTS (RADIO OR LANDLINE)

LIGHT FIXTURE: ( ) VAPORTIGHT WALL MOUNTED, WITH GLOBE – LED LAMP 20W POWER – HUBBELL # VL15WIG OR EQUAL.

VAULT RECEPTACLE: ( ) DUPLEX RECEPTACLE 20A, 125V, WEATHERPROOF "IN USE" ENCLOSURE. MOUNT 36" ABOVE BOTTOM VAULT.

FLOAT SWITCH: ( ) MERCURY FLOAT SWITCH – HIGH WATER INDICATOR SET AT FLOOR LEVEL.

JUNCTION BOX: ( ) NEMA 4 J-BOX – 4"x4"x2"

SWITCH: (S) 1P-20A, 120/277V, WEATHERPROOF-WET-ENCLOSURE. MOUNT WITHIN REACH TOP OF LADDER.

TRANSCLOSURE: SEE DETAIL

GROUND RODS: 3/4"ø X 10' CU-CLAD DRIVEN WITH TOP 1' BELOW GRADE.

GROUND CONNECTIONS: SHALL BE CADWELD WELDS.

CONDUIT SEALS: ALL CONDUIT PENETRATIONS OF VAULT AND TRANSCLOSURE PAD SHALL BE SEALED EACH END AFTER CONDUCTORS INSTALLED.

I/O REQUIREMENTS:
FM FLOW METER
PS PRESSURE TRANSDUCER
HW HIGH WATER FLOAT
SP SYSTEM POWER AT PANEL
TS TAMPER SWITCH(2) TRANSCLOSURE
V VAULT

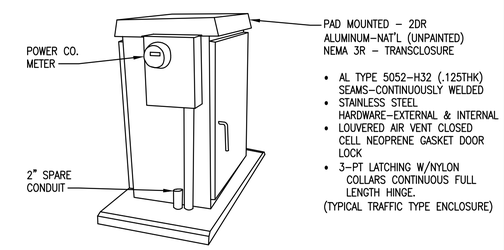

TRANSCLOSURE DETAIL

NOT TO SCALE

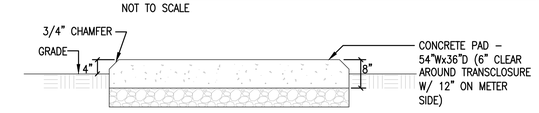

CONCRETE PAD DETAIL - (TRANSCLOSURE)

NOT TO SCALE

STRUCTURAL ABBREVIATIONS	
HORIZ	HORIZONTAL
MAX	MAXIMUM
MIN	MINIMUM
O.C.	ON CENTER
PSF	POUNDS PER SQUARE FOOT
PSI	POUNDS PER SQUARE INCH
REINF	REINFORCEMENT
TYP	TYPICAL

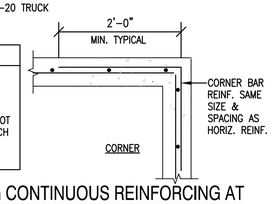

TYPICAL DETAIL SHOWING CONTINUOUS REINFORCING AT CORNERS

NOT TO SCALE

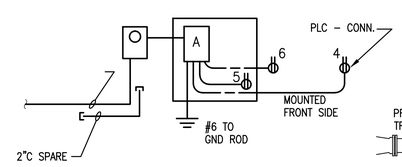

POWER RISER DIAGRAM

NOT TO SCALE

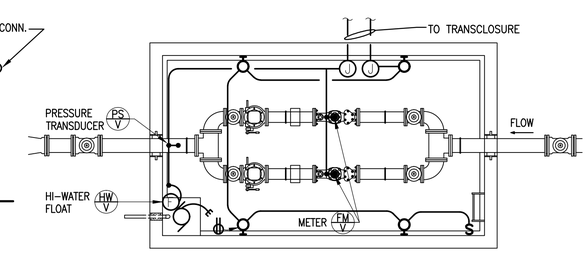

DUAL 6" WATER METER VAULT

NOT TO SCALE

PANEL 'A' SCHEDULE

60A, M.C.B., 120/240 V, 1 PHASE, 3 WIRE, 60Hz, SURGE PROTECTOR, SEE NOTE BELOW

LOAD SERVED	LOAD (AMPS) A	LOAD (AMPS) B	BKR TRIP	WIRE SIZE	CKT NO.	CKT NO.	WIRE SIZE	BKR TRIP	LOAD (AMPS) A	LOAD (AMPS) B	LOAD SERVED
LIGHTS – VAULT	3		20	12	1	2	12	20	7		SUMP PUMP
RECEPT – MAINT. VAULT		5	20	12	3	4	12	20		5	PLC
RECEPT – MAINT POWER SIDE	5		20	12	5	6	12	20	5		RECEPT – COMM. SIDE
SPARE		0	20	--	7	8	--	20		0	SPARE
SPACE	0		--	--	9	10	--	20	0		SURGE PROTECTOR
SPACE		0	--	--	11	12				0	
TOTAL	8	5							12	5	TOTAL

TOTAL CONNECTED AMPS A: 20 B: 10

NOTE: PRIOR TO ORDERING PANEL – CONTRACTOR SHALL CONFIRM AVAILABLE SHORT CIRCUIT CURRENT FROM UTILITY COMPANY.

	CITY OF NORFOLK – DEPARTMENT OF UTILITIES STANDARD DETAILS	SCALE: NOT TO SCALE
DATE: 06/12	6" DUAL WATER METER VAULT (4" SIMILAR)	DRAWING NO. CW 08

NOTES:

1. LETTER ON COVER SHALL BE "S" WHEN USED IN SAN. SEWER SYSTEM AND "W" WHEN USED IN WATER SYSTEM.
2. RISER FOR VALVE BOX SHALL MATCH TYPE OF PIPE USED FOR MAIN.

GENERAL SPECIFICATIONS

1. CAST IRON SHALL BE 35,000 PSI
2. ASTM A48 CLASS 35B

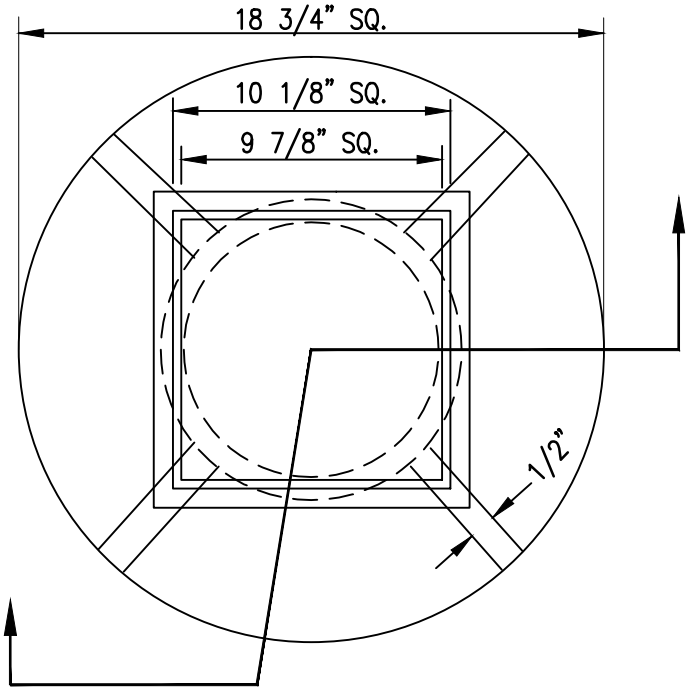

PLAN VIEW

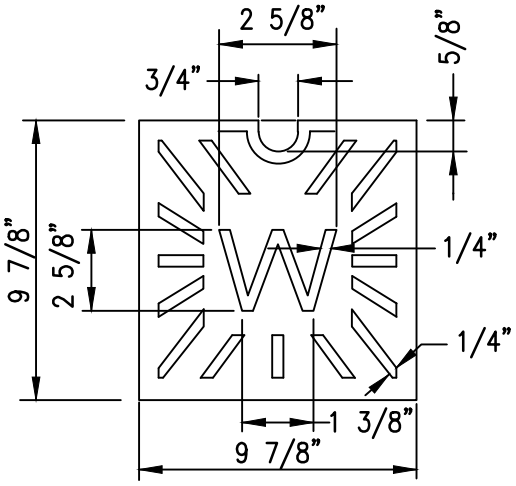

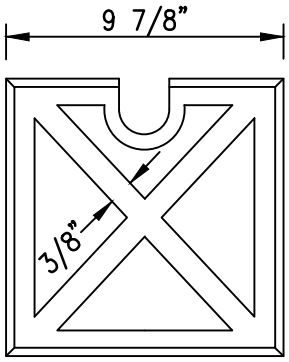

PLAN VIEW VALVE LID

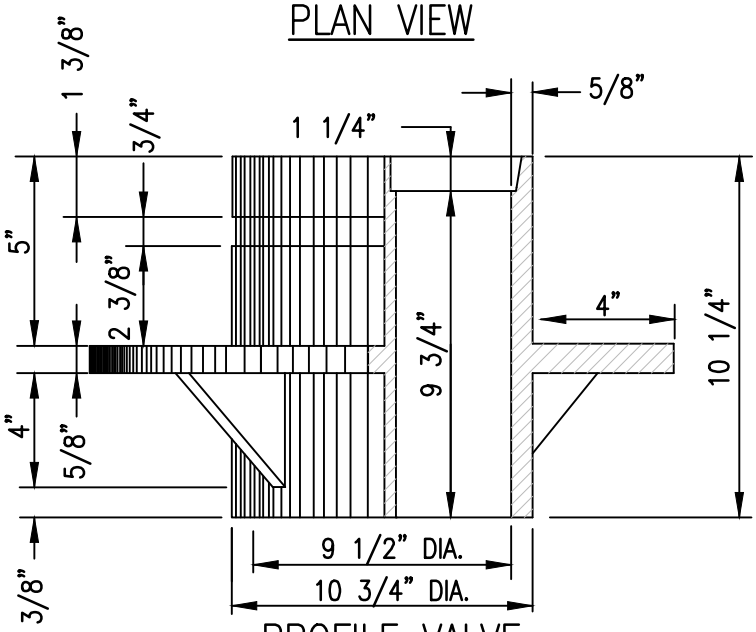

PROFILE VALVE BOX

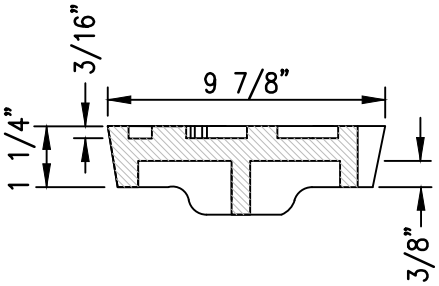

PROFILE VALVE LID

	CITY OF NORFOLK – DEPARTMENT OF UTILITIES STANDARD DETAILS	SCALE: NOT TO SCALE
DATE: 03/07	LARGE VALVE BOX FOR MAINS 8 INCHES AND LARGER	DRAWING NO. CWS 01

NOTES:

1. LETTER ON COVER SHALL BE "S" WHEN USED IN SAN. SEWER SYSTEM AND "W" WHEN USED IN WATER SYSTEM.

2. RISER FOR VALVE BOX SHALL MATCH TYPE OF PIPE USED FOR MAIN.

GENERAL SPECIFICATIONS

1. CAST IRON SHALL BE 35,000 PSI

2. ASTM A48 CLASS 35B

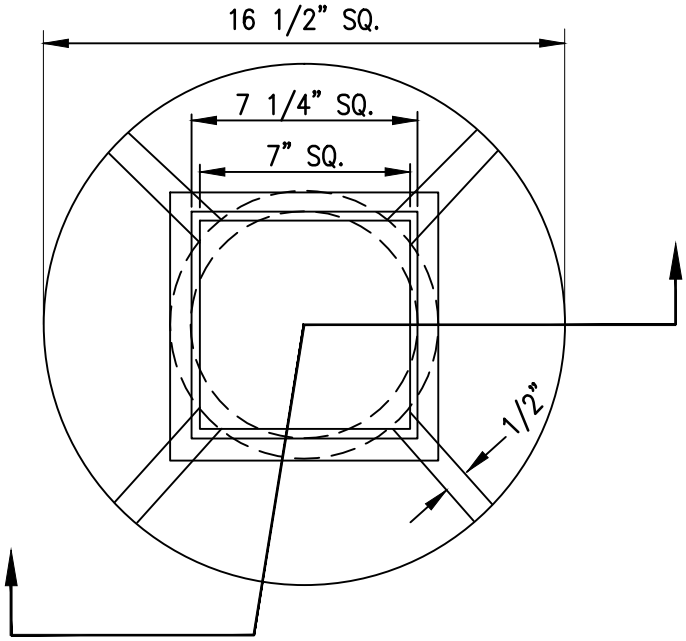

PLAN VIEW

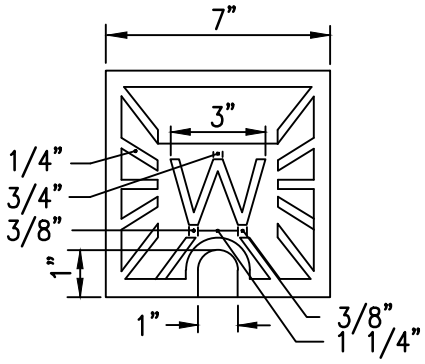

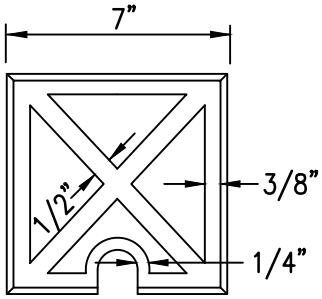

PLAN VIEW VALVE LID

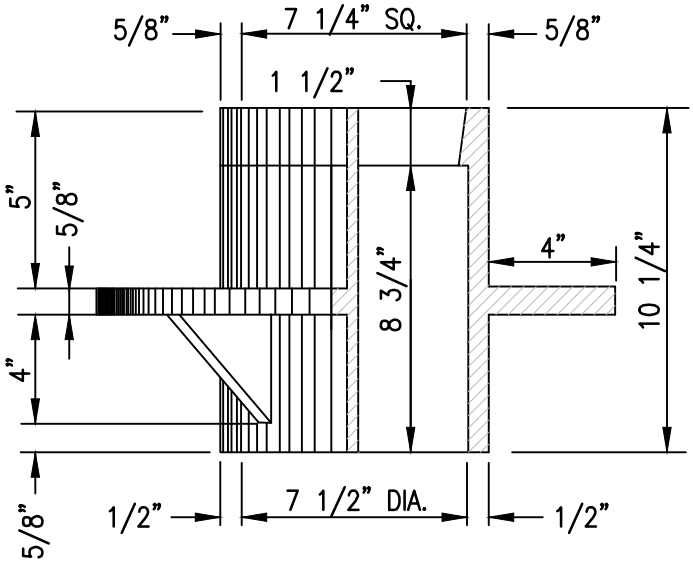

PROFILE VALVE BOX

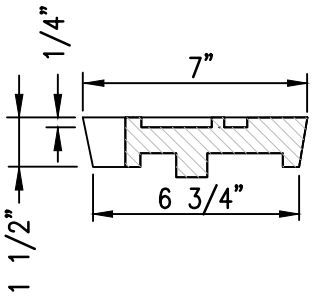

PROFILE VALVE LID

	CITY OF NORFOLK – DEPARTMENT OF UTILITIES STANDARD DETAILS	SCALE: NOT TO SCALE
DATE: 03/07	SMALL GATE VALVE BOX FOR MAINS UP TO 6 INCHES	DRAWING NO. CWS 02

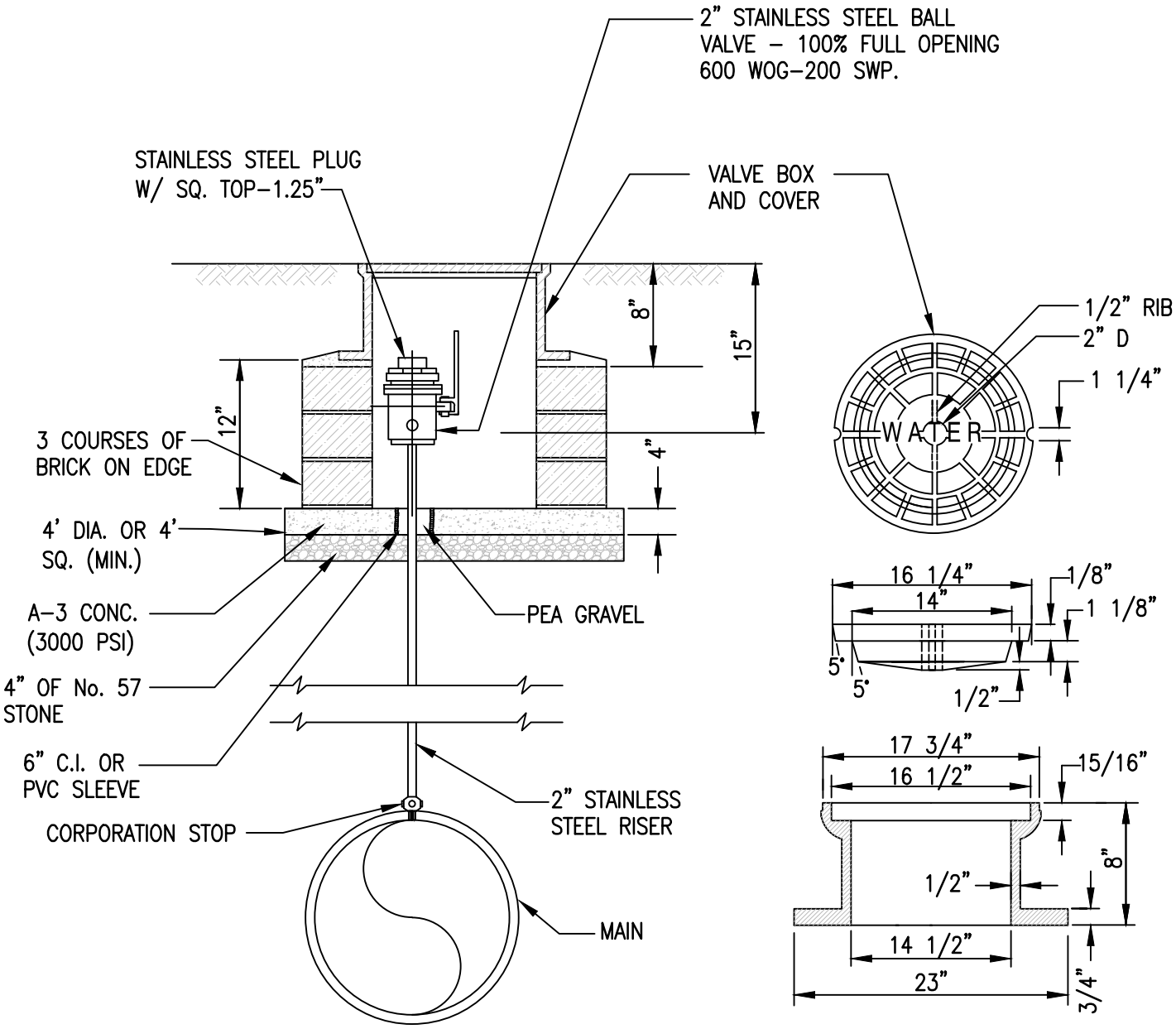

NOTES:

1. GRAVEL BEDDING MAY BE USED IN PLACE OF CONCRETE IN NON–TRAFFIC AREA AT DISCRETION OF ENGINEER.
2. MACHINE SEATING SURFACES ON BOTH COVER & FRAME.
3. ALL CASTINGS TO BE DIPPED IN ASPHALTIC PAINT AFTER MACHINING
4. TOLERANCE TO BE ±0.125" FOR ALL DIMENSIONS.
5. CASTING TO BE SHOT BLASTED.
6. CASTINGS TO BE ASTM A48 CLASS 35B.

	CITY OF NORFOLK – DEPARTMENT OF UTILITIES STANDARD DETAILS	SCALE: NOT TO SCALE
DATE: 03/07	AIR VENT / BLOW–OFF VALVE	DRAWING NO. CWS 03

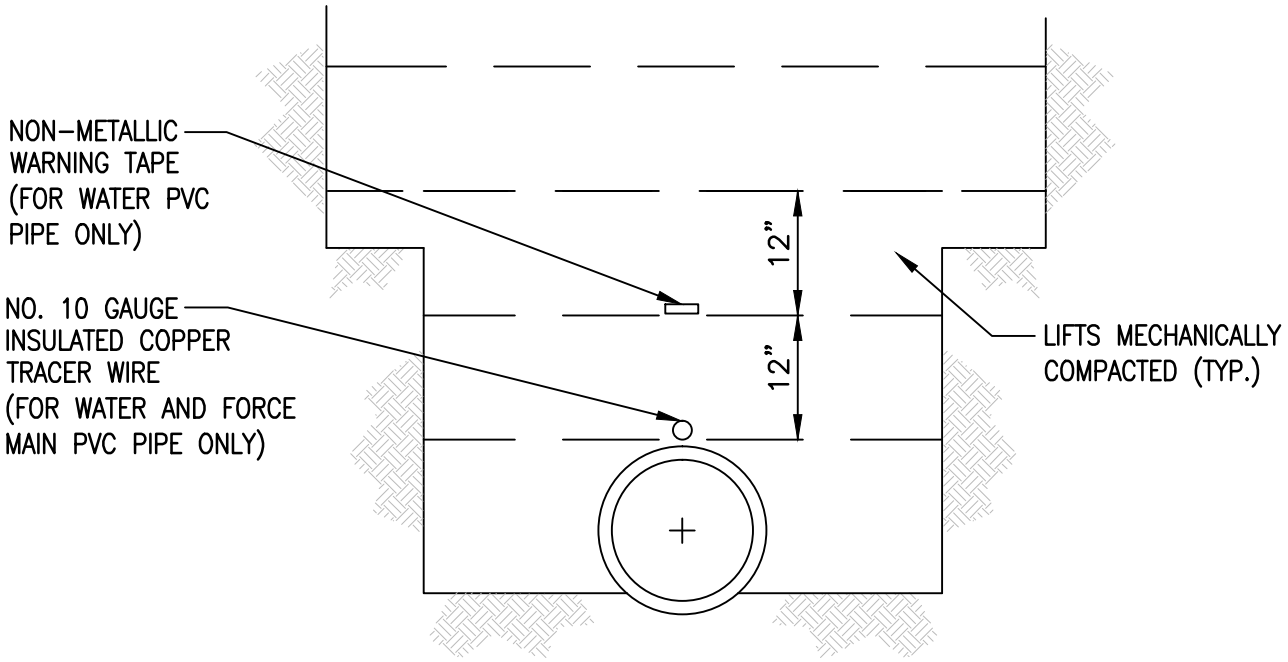

PVC PIPE (WATER):

1. BACKFILL WITH ACCEPTABLE MATERIAL TO 12" ABOVE CROWN OF PIPE. COMPACT BY MECHANICAL MEANS.
2. PLACE NO. 10 GAUGE INSULATED COPPER TRACER WIRE. DIRECTLY ON TOP OF THE PIPE SECURE BY PLACING ACCEPTABLE FILL MATERIAL BY HAND. TRACER WIRE TO BE LOOPED INTO VALVE BOXES FOR TRACING PURPOSES.
3. BACKFILL WITH ACCEPTABLE MATERIAL TO 12" ABOVE TRACER WIRE. COMPACT BY MECHANICAL MEANS.
4. PLACE NON-METALLIC WARNING TAPE. SECURE BY PLACING ACCEPTABLE FILL MATERIAL BY HAND.
5. BACKFILL REMAINING TRENCH IN 12" LIFTS, COMPACT BY MECHANICAL MEANS, UP TO BOTTOM OF PAVEMENT SECTION.
6. PLACE TEMPORARY OR PERMANENT PAVEMENT.

PVC/DUCTILE IRON PIPE (SEWER) AND DUCTILE IRON PIPE (WATER):

1. BACKFILL IN 12" LIFTS TO BOTTOM OF PAVEMENT SECTION. EACH LIFT TO BE MECHANICALLY COMPACTED.
2. PLACE TEMPORARY OR PERMANENT PAVEMENT.

* THE CITY MAY CONDUCT COMPACTION TESTING AT ANY POINT DURING THE BACKFILL PROCESS.

	CITY OF NORFOLK – DEPARTMENT OF UTILITIES STANDARD DETAILS	SCALE: NOT TO SCALE
06/12	BACKFILL METHODS	DRAWING NO. CWS 04

TABLE II

REQUIRED COVER OVER PIPE.

NOMINAL SIZE OF DI PIPE	REQUIRED COVER OVER PIPE (INCH)
2"	30
3"	30
4"	30
6"	30
8"	36
12"	36
16"	36
18"	36
20"	36
24"	42
30"	42
36"	42
42"	42

NOTES:

1. THE MINIMUM COVER OVER PIPES SHALL BE AS SHOWN IN TABLE NO. II FOR WATER MAINS AND SEWER FORCE MAINS INSTALLED IN THE CITY OF NORFOLK, EXCEPT WHEN SUCH CONDITIONS EXIST. TO PREVENT THIS COVER FROM BEING OBTAINED, IN WHICH EVENT THE AMOUNT OF COVER SHALL BE DETERMINED BY THE ENGINEER. THE AMOUNT OF COVER SHALL BE MEASURED FROM THE PROPOSED GRADE OF THE STREET OR THE EXISTING GRADE WHICH EVER MAY BE THE LOWER.

2. ALL VALVES SMALLER THAN 12" DIAMETER SHALL BE GATE VALVES.

3. ALL WATER VALVES SHALL BE OPEN RIGHT, 12" DIAMETER OR LARGER SHALL BE HORIZONTAL GATE OR BUTTERFLY VALVES.

4. ALL SEWER VALVES SHALL BE OPEN LEFT GATE VALVES, 12" AND LARGER SHALL BE HORIZONTAL.

TABLE I

MAXIMUM PERMISSABLE DEFLECTION (INCHES)				APPROX. RADIUS OF CURVE PRODUCED BY SUCCESSION OF JOINTS (FEET)			
NOMINAL SIZE OF PIPE (INCH)	16 FT LENGTH	18 FT LENGTH	20 FT LENGTH	12 FT LENGTH	16 FT LENGTH	18 FT LENGTH	20 FT LENGTH
4	28	31		85	110	125	
6	24	27		100	130	145	
8	18	20		130	170	195	
10	18	20		130	170	195	
12	18	20	22	130	170	195	220
14	12	13.5	15	190	250	285	320
16	12	13.5	15	190	250	285	320
18	10	11	12	230	300	340	380
20	10	11	12	230	300	340	380
24	8	9	10	300	400	450	500
30	8	9	10	300	400	450	500
36	7	8		330	440	500	
42	6	7.5		340	450	510	
48	6	7.5		340	450	510	

NOTE:

1. MAXIMUM ALLOWABLE DEFLECTION SHALL BE 50% OF MANUFACTURERS RECOMMENDED DEFLECTION.

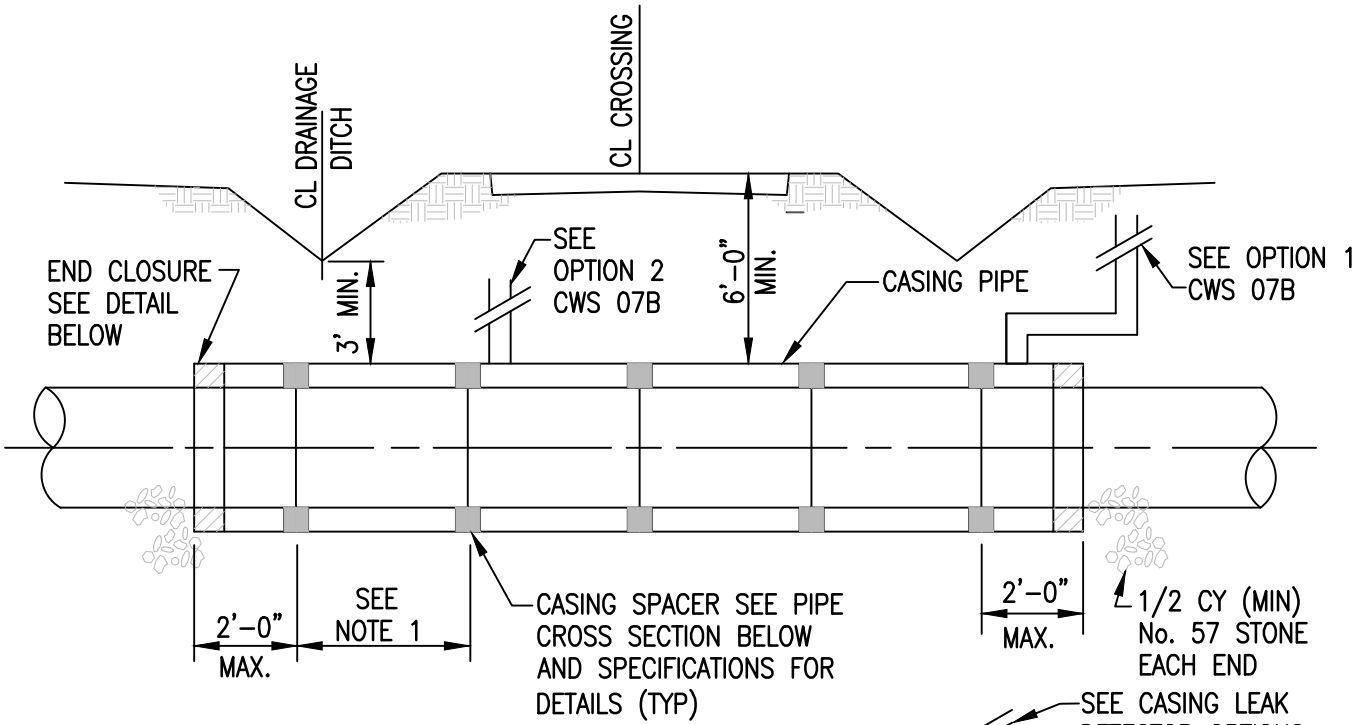

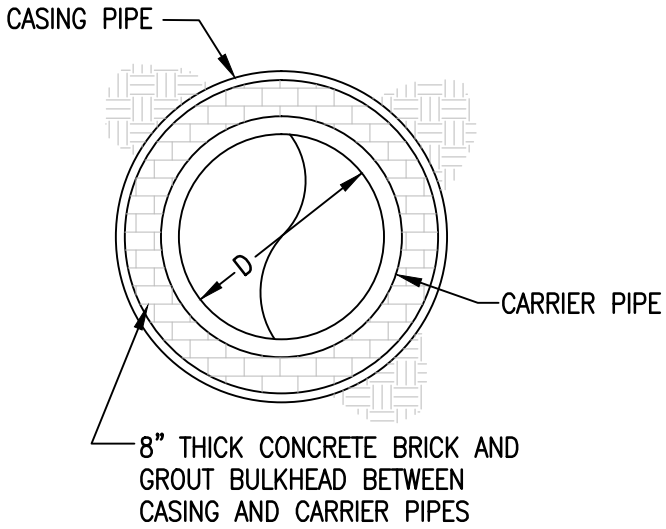

END CLOSURE

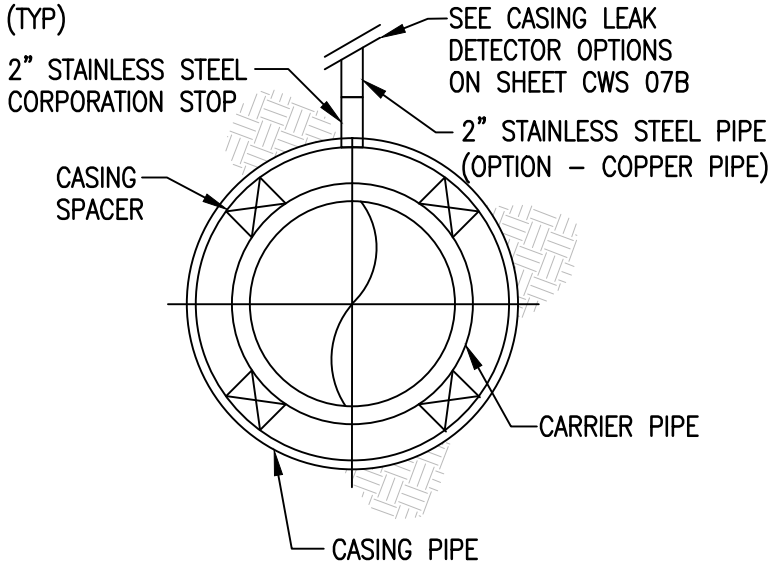

PIPE CROSS SECTION

NOTES:

1. PROVIDE FOUR POINT CASING PIPE SUPPORT FOR EACH PIPELINE SECTION. CENTER SPACERS SHALL BE CENTERED BETWEEN OUTSIDE SPACERS, OUTSIDE SPACERS SHALL BE 1'-0" FROM JOINT.
2. CARRIER PIPE SHALL BE MECHANICAL RESTRAINED JOINT DUCTILE IRON PIPE CLASS 52. DUCTILE IRON PIPE BEING USED FOR GRAVITY SEWER OR FORCE MAIN SHALL BE COATED WITH PROTECTO 401 OR AN APPROVED EQUAL.
3. FOR CASING SIZES AND ALLOWABLE MATERIALS, SEE FIGURE CWS 07C.
4. PROVIDE STAINLESS STEEL SPACERS WITH UHMW RUNNERS. ELECTRICALLY ISOLATE CARRIER PIPE FROM CASING PIPE.

	CITY OF NORFOLK – DEPARTMENT OF UTILITIES STANDARD DETAILS	SCALE: NOT TO SCALE
DATE: 10/07	WATER LINE CASING	DRAWING NO. CWS 07A

OPTION 2

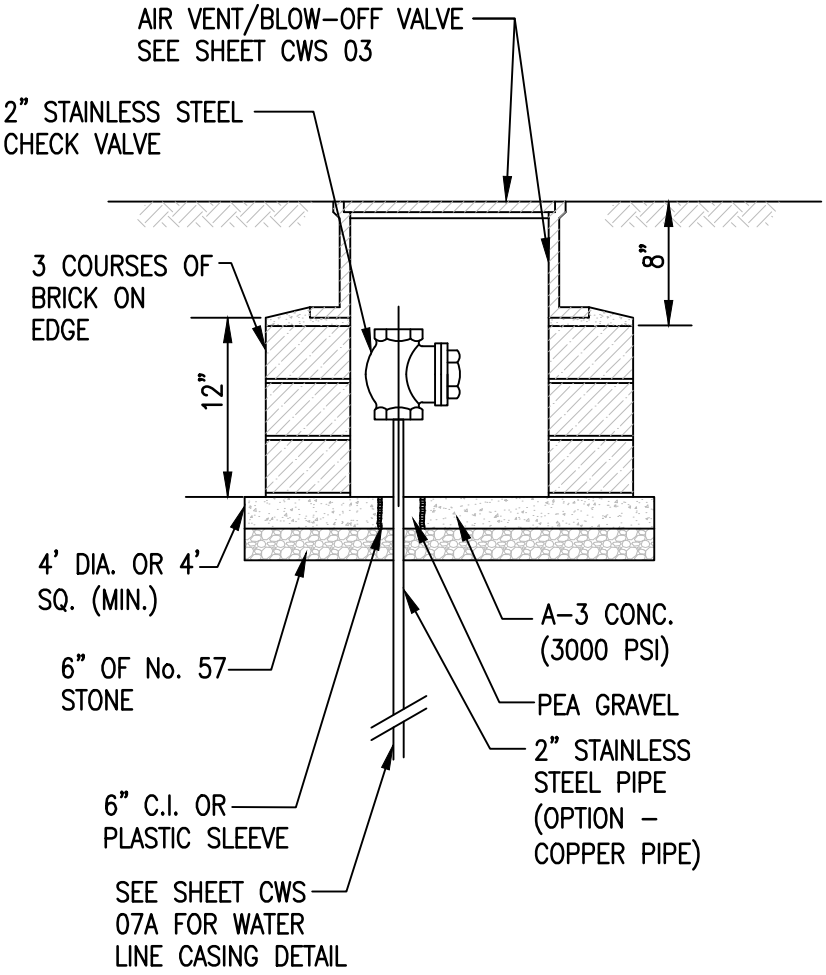

OPTION 1

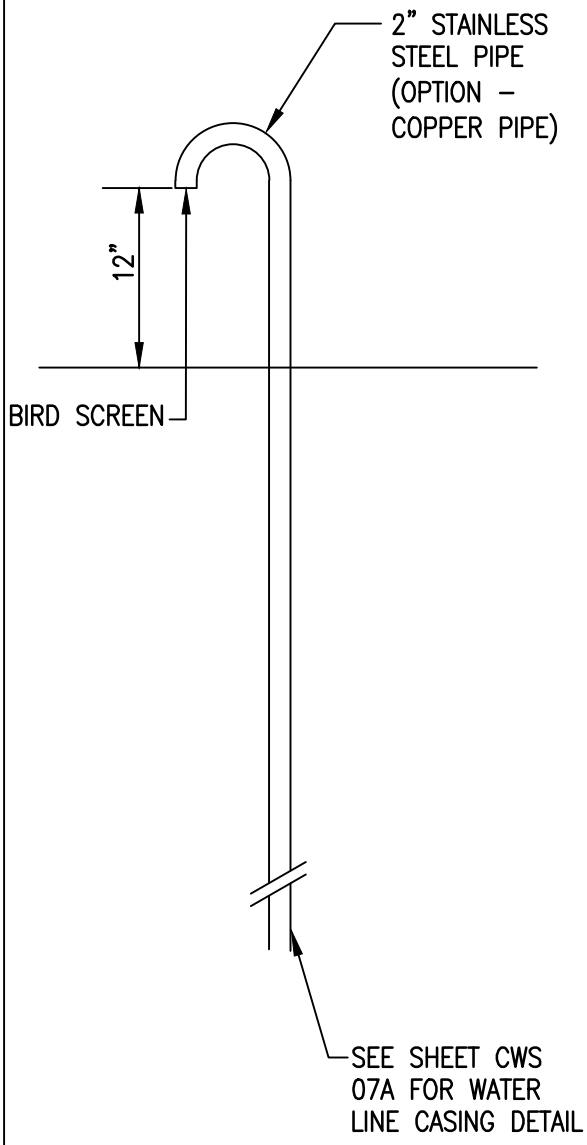

NOTES:

1. MACHINE SEATING SURFACES ON BOTH COVER & FRAME.
2. ALL CASTINGS TO BE DIPPED IN ASPHALTIC PAINT AFTER MACHINING.
3. TOLERANCE TO BE ±0.125" FOR ALL DIMENSIONS.
4. CASTING TO BE SHOT BLASTED.
5. CASTINGS TO BE ASTM A48 CLASS 35B.

	CITY OF NORFOLK – DEPARTMENT OF UTILITIES STANDARD DETAILS	SCALE: NOT TO SCALE
DATE: 10/07	CASING LEAK DETECTOR OPTIONS 1 & 2	DRAWING NO. CWS 07B

CASING PIPE REQUIREMENTS						
CARRIER PIPE DIA.	MINIMUM CASING PIPE DIA.	MINIMUM WALL THICKNESS				MINIMUM NUMBER OF CASING SPACER RUNNERS
		CRITERIA WITHIN RAILROAD RIGHT OF WAY		CRITERIA WITHIN CITY OR VDOT RIGHT OF WAY		
		R.C.P. PROTECTIVE COATING	STEEL WITH PROTECTIVE COATING	R.C.P.	STEEL	
4"	12"	3.0	0.375	3.0	0.250	4
6"	18"	3.0	0.375	3.0	0.250	4
8"	18"	3.0	0.375	3.0	0.250	4
10"	20"	3.0	0.375	3.0	0.250	4
12"	24"	3.5	0.375	3.5	0.250	4
16"	30"	4.0	0.500	4.0	0.375	6
18"	30"	4.0	0.500	4.0	0.375	6
20"	36"	4.5	0.563	4.5	0.375	6
24"	42"	5.0	0.625	5.0	0.500	6

NOTES:

1. SLOPE CASING PIPE AT MINIMUM GRADE OF 1/16" PER FOOT.
2. PROVIDE LEAK DETECTION PER DETAIL.
3. OPTION 1 OR OPTION 2 AT DISCRETION OF ENGINEERING.
4. INCREASING THICKNESS OF CASING MUST BE CONSIDERED WHERE BORE LENGTHS EXCEED 125 FEET.

	CITY OF NORFOLK – DEPARTMENT OF UTILITIES STANDARD DETAILS	SCALE: NOT TO SCALE
DATE: 07/07	WATER & FM CASING REQUIREMENTS	DRAWING NO. CWS 07C

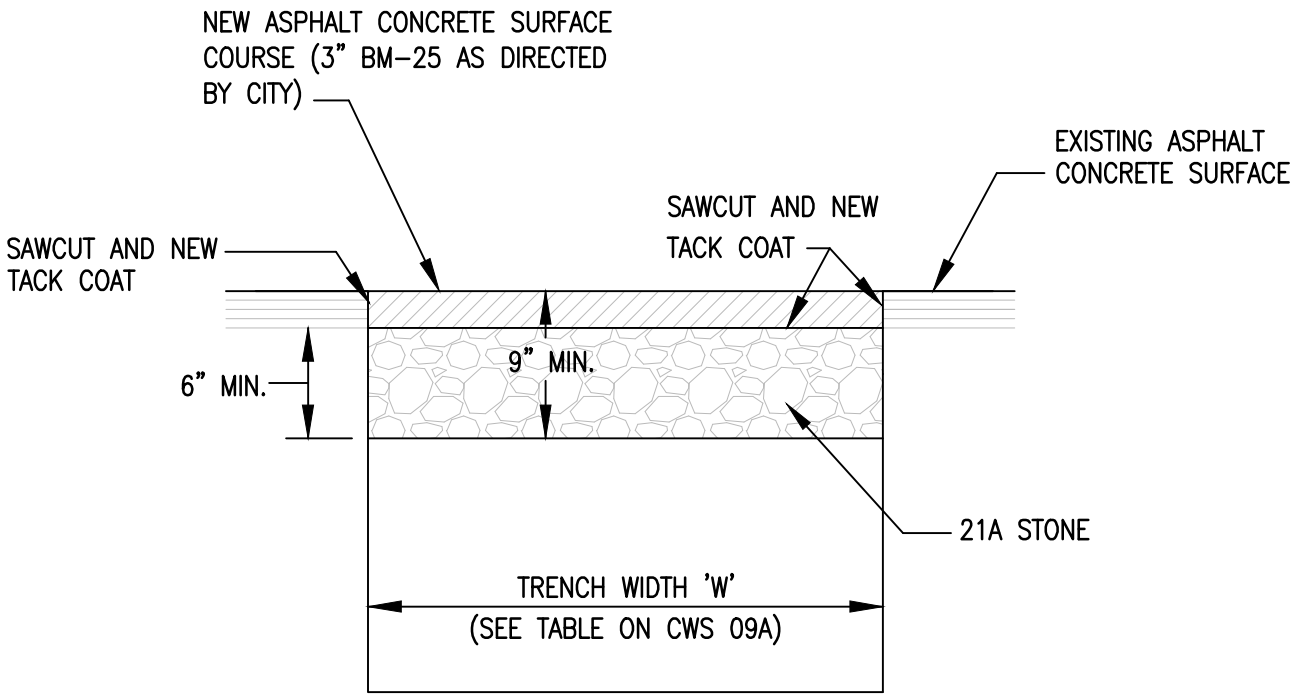

NOTES:

1. INITIALLY THE CONTRACTOR SHALL INSTALL 21A TO A DEPTH OF 9" MINIMUM OR AS REQUIRED ON PLANS.
2. BM-25 BASE COURSE ASPHALT SHALL BE INSTALLED AT THE DIRECTION OF THE CITY OR AS DIRECTED ON THE PLANS.
3. THE BM-25 BASE COURSE ASPHALT SHALL BE PAID FOR BY THE TON WHEN INSTALLED IN ACCORDANCE WITH THE TEMPORARY PAVEMENT PATCH DETAIL.
4. TRENCH WIDTH SHALL BE AS PER PIPE BEDDING DETAIL.
5. WHEN DIRECTED BY THE CITY, THE CONTRACTOR SHALL REMOVE THE TOP 3" OF 21A STONE AND INSTALL 3" OF BM-25 BASE COURSE ASPHALT.
6. ALL 21A STONE THAT IS REMOVED FOR PLACEMENT OF THE BM-25 SHALL BE REUSED FOR OTHER SECTIONS OF THE CURRENT PROJECT.
7. IF THE CONTRACTOR DEVIATES FROM THE PAVING PHASING PLAN ESTABLISHED ON THE PLANS, THE BM-25 BASE COURSE ASPHALT PAVEMENT AND INSTALLATION SHALL BE AT THE CONTRACTORS EXPENSE AS DETAILED IN THE GENERAL NOTES SECTION.

	CITY OF NORFOLK – DEPARTMENT OF UTILITIES STANDARD DETAILS	SCALE: NOT TO SCALE
DATE: 06/12	TEMPORARY PAVEMENT PATCH	DRAWING NO. CWS 08

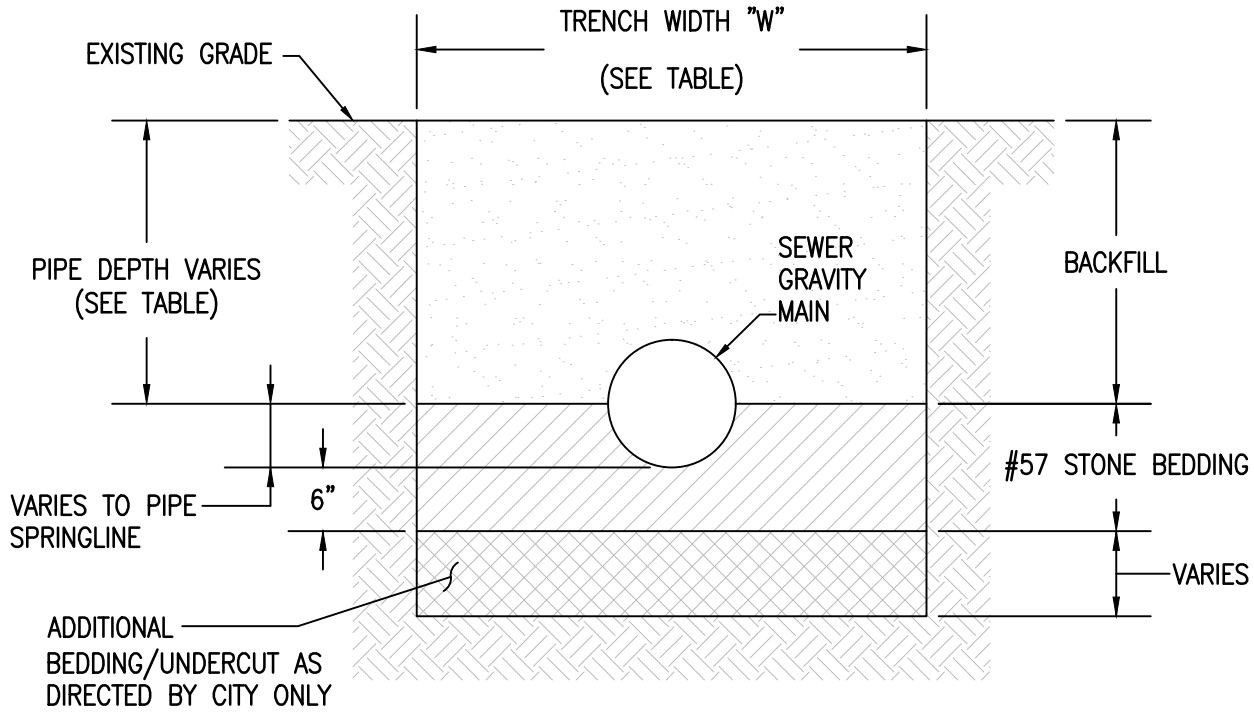

SEWER GRAVITY MAIN

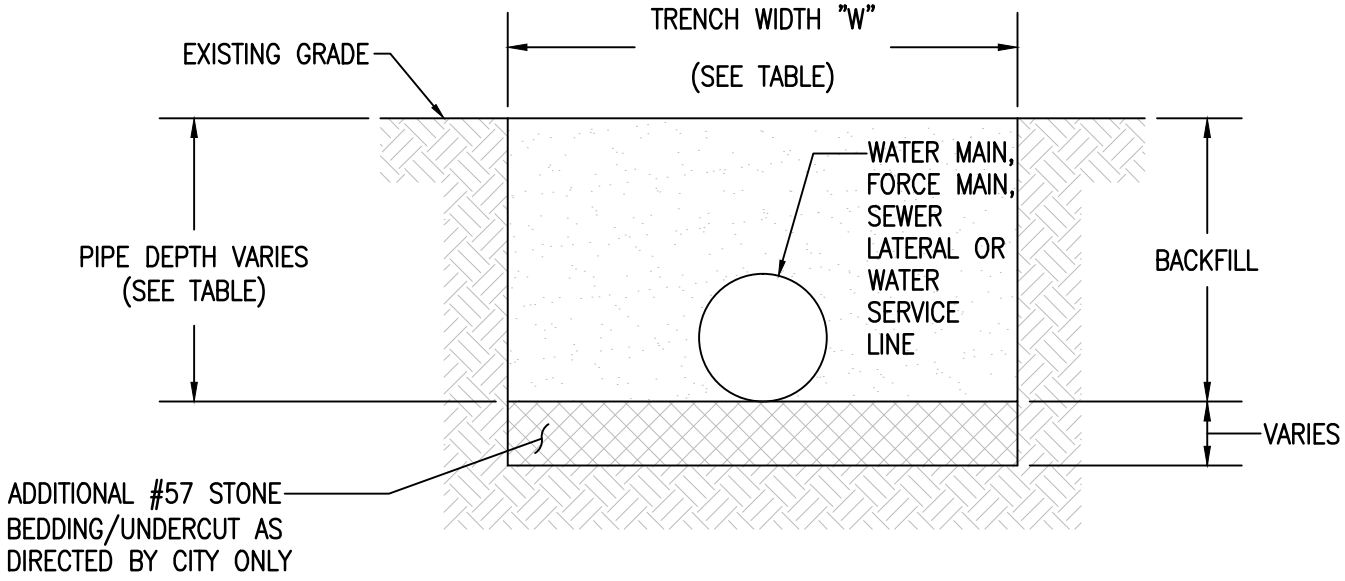

WATER MAIN, SEWER LATERALS OR WATER SERVICE LINES

	CITY OF NORFOLK – DEPARTMENT OF UTILITIES STANDARD DETAILS	SCALE: NOT TO SCALE
DATE: 06/12	PIPE BEDDING	DRAWING NO. CWS 09

SEWER GRAVITY MAIN NOTES:

1. #57 STONE BEDDING AS SHOWN SHALL BE INCLUDED AS PART OF THE UNIT BID PRICE OF THE PIPE.
2. ANY ADDITIONAL UNDERCUT SHALL BE AT THE DIRECTION OF THE CITY ONLY.
3. #57 STONE TICKETS SHALL NOT BE ACCEPTED BY THE CITY. THE ADDITIONAL #57 STONE BEDDING/UNDERCUT AS DIRECTED BY THE CITY SHALL BE A CALCULATED QUANTITY ONLY, AND NOT BASED ON STONE TICKETS.
4. QUANTITY OF #57 STONE BEDDING ACCEPTABLE FOR INSTALLATION SHALL NOT EXCEED THE FULL TRENCH WIDTH, AS IDENTIFIED IN THIS DETAIL, AS WELL AS THE TOTAL DEPTH AND LENGTH AGREED UPON WITH THE CITY.
5. NO PAYMENT SHALL OCCUR FOR #57 STONE BEDDING NOT PROPERLY AUTHORIZED BY THE CITY IN ADVANCE.

WATER OR FORCE MAIN NOTES:

1. #57 STONE BEDDING SHALL NOT BE INCLUDED AS PART OF THE UNIT BID PRICE OF THE PIPE. #57 STONE SHALL BE CALCULATED AT 100lbs/CUBIC FOOT.
2. #57 STONE BEDDING SHALL BE INSTALLED ONLY AT THE SPECIFIC DIRECTION OF THE CITY.
3. IF UNSUITABLE SOILS ARE ENCOUNTERED THE CONTRACTOR SHALL NOTIFY THE CITY AND REQUEST #57 STONE BEDDING BE AUTHORIZED FOR INSTALLATION.
4. ANY #57 STONE BEDDING INSTALLED SHALL BE A CALCULATED QUANTITY AND NOT BASED ON STONE TICKETS.
5. QUANTITY OF #57 STONE ACCEPTABLE FOR INSTALLATION SHALL NOT EXCEED THE FULL TRENCH WIDTH, AS IDENTIFIED IN THIS DETAIL, AS WELL AS THE TOTAL DEPTH AND LENGTH AGREED UPON WITH THE CITY.
6. NO PAYMENT SHALL OCCUR FOR BEDDING NOT PROPERLY AUTHORIZED BY THE CITY IN ADVANCE.

TRENCH WIDTH INFORMATION	
PIPE DEPTH (FT)	TRENCH WIDTH "W" (FT) *
SEWER LATERALS & WATER SERVICE LINES	2 **
0.00 – 3.99	4 **
4.00 – 5.99	5 **
6.00 – 11.99	8 **
> 12.00	10 **

* 'W' DENOTES WIDTH FOR #57 STONE INCLUDED IN COST AS WELL AS MAXIMUM TRENCH WIDTH FOR 21A STONE AND ASPHALT

** MATERIALS INSTALLED IN EXCESS OF THE AUTHORIZED TRENCH WIDTH SHALL NOT BE PAID WITHOUT A REASONABLE WRITTEN EXPLANATION

	CITY OF NORFOLK – DEPARTMENT OF UTILITIES STANDARD DETAILS	SCALE: NOT TO SCALE
DATE: 06/12	PIPE BEDDING NOTES	DRAWING NO. CWS 09A